Scientific Equipment & Furniture Association

SEFA Desk Reference
Fifth Edition

SEFA World Headquarters
65 Hilton Avenue
Garden City, NY 11530

Tel: 516-294-5424
www.sefalabs.com

SEFA SPELLS SAFE

Copyright

Copyright 2020 by the Scientific Equipment & Furniture Association.

All rights reserved under Pan American and International Copyright Conventions.

Published in the United States by the Scientific Equipment and Furniture Association, Garden City, New York 11530.

Bibliographical Note

This is the sixth published edition. Documents of this type have been published by the Association since 1988.

Copyright 2020

Material published herein remains the property of the Scientific Equipment & Furniture Association (SEFA).

No material or parts thereof may be reproduced or used out of context without prior specific approval and proper credit to SEFA unless otherwise noted to the contrary herein.

Preface

The SEFA Desk Reference is dedicated to all the SEFA members who actively participate in the various Recommended Practice Committees. This book is the culmination of their hard work spanning thousands of hours of collective time over three decades. SEFA develops these Recommended Practices to create a greater awareness of the difference between "Laboratory Grade" furniture, products and accessories, and what is commonly used in other environments. SEFA's Recommended Practices serve as a guide thoughout the world to insure the design and construction of the safest laboratory facilities.

These Recommended Practices are constantly being updated based on member comments as well as feedback from the lab planners, architects, engineers, manufacturers, contractors, dealers, installers and ultimately the scientists who use SEFA member furniture, fume hoods and related laboratory products and accessories. If you have any questions or comments, please email us at info@sefalabs.com.

David J. Sutton, CAE, JD
Executive Director and General Counsel

July, 2020

© SEFA - 5th Edition Desk Reference - Version 3.0

Table of Contents

	Page
2019-20 Board of Directors	**6**
SEFA Member Directory	**7**
Advisory Board Members	**20**
Past Chairmen	**21**
By-Laws	**23**
SEFA Approved Test Labs	**36**
Code of Ethics	**37**

Recommended Practices

SEFA 1-2020	-	Fume Hoods	**47**
SEFA 2-2020	-	Installation	**161**
SEFA 3-2020	-	Work Surfaces	**191**
SEFA 4-2020	-	Glossary of Terms	**199**
SEFA 5-2020	-	Scope of Work	**213**
SEFA 7-2020	-	Fixtures	**227**
SEFA 8-M-2020	-	Laboratory Grade Metal Casework	**251**
SEFA 8-PH-2020	-	Laboratory Grade Phenolic Casework	**275**
SEFA 8-PL-2020	-	Laboratory Grade Plastic Laminate Casework	**295**
SEFA 8-P-2020	-	Laboratory Grade Polypropylene Casework	**319**
SEFA 8-W-2020	-	Laboratory Grade Wood Casework	**345**
SEFA 9-2020	-	Ductless Enclosures	**367**
SEFA 10-2020	-	Adabtable Casework Systems	**383**
SEFA 11-2020	-	Liquid Chemical Storage	**423**

ADVERTISERS **437**

SEFA's Board of Directors

2019-20 Officers

Chairman

Eddie Adkins *Sheldon Labs*

Vice Chairman

Mario DiFonte *Mott Manufacturing*

Secretary / Treasurer

Kurt Rindoks *Kewaunee Scientific Corp.*

Immediate Past Chair

Tom Schwaller *Labconco Corporation*

At Large Directors

Fabio Biffi *BICASA, SRL*

Robert Deluca *Lab Crafters, Inc.*

Lloyd Fisk *Research Facilities Design*

Ingo Sternitzke *Trespa, B.V.*

Hank Von Der Bruegge *Durcon*

© SEFA - 5th Edition Desk Reference - Version 3.0

SEFA Member Directory
(7/1/2020)

3 Flow (A)*
231-C East Johnson Street, Cary, NC 27513
Tel: 919-319-4290 - Fax: 919-319-4291
Tom Smith, Pres - tcsmith@3flow.com

Aakar Scientific Pvt., Ltd., (E)
443 GIDC Estate, Makarpura
Vadodara, Gujarat 390 010 INDIA
Tel: 86-519-88500208—Fax 86-519-88500728
Makarand Musale - aspl@aakarscientific.com
exports@aakarscientific.com

abell nepp (AB)
74 Margaret Street
London W1W 8SU UK
Tel: +44 20 7612 1583
Bruce Nepp, Director - bruce@abell-nepp.co.uk

Acier Inoxy-Lab, Inc. (E)
2574 Avenue Dalton
Quebec G1P3S4 CANADA
Tel: 418 657 5020 —Fax 418 657 7081
Serge LaBerge -serge.laberge@acierinoxy-lab.com
Daniel Gignac -daniel.gignac@acierinoxy-lab.com

AirClean Systems (E)
2179 East Lyon Station Road
Creedmoor, NC 27522
Tel: 919-255-3220—Fax: 919-255-0015
Kevin McGough - Pres.
Kevin@aircleansystems.com
Krystina Ashe -
krystinaAshe@aircleansystems.com

Air Control, Inc. (E)
237 Raleigh Road
Henderson, NC 27536
Tel: 978 524 8906 -Fax: 978 524 8916
Kenneth Dixon, CEO - kdixon@aircontrol-inc.com

Air Master Systems (E)
6480 Norton Center Drive
Muskegon, MI 49441
Tel: 231-798-1111 -Fax: 231-4000
Don Nelson, Pres. don@airmastersystems.com
Jim Smith - jim@airmastersystems.com

American Epoxy Scientific LLC (E)
500 East 16th Street
Mountain Home, AR 72653
Tel: 870.701.5015
Michael Miles - MMiles@epoxysci.com

AM Technical Solutions (AB)
1501 Fountainhead Parkway - Suite 130
Tempe , AZ 85282
Tel: 480.446.8000
Abbie Gregg, Owner - agi@abbiegregg.com

Art Lab Equipments (E)
Plot No. 5L, Phase V, Ida-Jeedimetla
Hyderabad, Telengana 500 055 India
Tel: +91 9849010014 -Fax: +91 40-40063678
Suresh Kumar, Director - artlabsindia@gmail.com
Anil Kumar Nair - anil@artlabsindia.com

asecos, GmbH (E)
Weiherfeldsiedlung 16-18
Gruendau-Lieblos, GERMANY 63584
Tel: +49 6051 9220-0 - Fax: +49 6051 9220-10
Sascha Kunkel, Global Sales Mgr. info@asecos.com

Assoc of University Research Parks (A)
7761 Diamondback Drive
College Park, Maryland 20742
Tel: 301-928-0527
Brian Darmody, CEO - briandarmody@aurp.net

A.T. Villa, Inc. (E)
1233 North Mayfair Road—Ste 302
Milwaukee, WI 53226
Tel: 800-554-9259 - Fax: 978-582-7488
Derek Matson - derek.matson@comcast.net
Ken Callahan - Ken.Callahan@atvilla.com

BSA LifeStructures (A)
9365 Counselors Row, Ste 300
Indianapolis, IN 46240 Quebec H7S 1N5 Canada
Tel: 317.819.7878 Fax: 317.819.7288
Jim Hill jhill@bsals.com
Jason Soderlund -
jsoderlund@bsalifestructures.com

*** (E) Executive Member (S) Sustaining Member (A) Associate Member (AB) Advisory Board**

SEFA Member Directory
(7/1/2020)

Becomar de Mexico S. de R.L. de C.V. (E)
Emiliano Zapata #103 San Blas Otzacatipan
Toluca, Mexico 50220
Tel: 011 52 2371220 - Fax: 722 2371221
Miguel Angel Velasco Ramirez, Int'l Mgr.
ventas2@becomardemexico.com

Bedcolab, Ltd. (E)
2305 Francis Hughes Ave.
Laval, Quebec H7S 1N5 Canada
Tel: 514 384 2820 Fax: 514 384 9292
Ronald Bedard, Pres. - ronbedard@bedcolab.com
Denis Coons - dcoons@bedcolab.com

Beijing Chengwei Borui Lab & Equipment Co., Ltd. (E)
No. 66 Guoanchuangke Tian Xia Di yi Cheng
Langfang Xianghe Hebei 065400 CHINA
Tel: 86-133-31150877- Fax: 86-010-62145537
Ziyi Zhou, General Mgr—zhou8521@188.com

Beijing Hanguang Chengwei Lab Equipment Eng. Tech Co., Ltd.(S)
Room 3103, A Bldg GuoRun Commercial Plaza
No. 46 West 4th Circle South Road
Feng Tai District , Beijing 100071 China
Tel: 86-10-83650691 - Fax: 86-10-83650692
Kebin Wang - wangkb588@163.com

Beijing Sun Lab Equipment Co. (E)
Room 2008, Tianxingjian Bldg. No. 47
Fuxing Road, Haidian Dist 5, Beijing 100036 China
Tel: 86-010-51921601 - Fax: 86-21-642-72085
Catherine Wu -wujingmiss@126.com

Beryl Laboratory Eng. Co., Ltd. (S)
206 #6 Building, Yangxin East Road
Pudong District, Shanghai 201114 China
Tel: 86-13761259770 - Fax: 86-21-64296100
Emily Zeng - emily.zeng@labs-b.com

BICASA S.R.L. (E)
Viale delle Industrie, 33,
20881 Bernareggio (MB) Italy
Tel: +39.039.60291 Fax: +39.039.6093153
Fabio Biffi, Managing Director fabio.biffi@bicasa.it
Ennio Biffi, Director ennio.biffi@bicasa.it

Bimos, Brand of Interstuhl, Inc. (E)
222 Merchandise Mart Ste 341
Chicago, IL 60654
Tel: 312.385.0240
Kai Schuler - k.schuler@interstuhl.com
Mark Scelfo - m.scelfo@interstuhl.com

BioFit Engineered Products, LP (E)
P.O. Box 109, Waterville, OH 43566
Tel: 419.823.1089 - Fax: 419.823.1342
Ed Metzger, President ed.metzger@biofit.com
LouAnn Evans - LouAnn.Evans@biofit.com

BROEN-LAB A/S (E)
Drejervænget 2• DK-5610 Assens, Denmark
Tel.: +45 63766376 • Fax: +45 6471 2476
Jesper Torp, CEO - jto@broen-lab.com
Torsten Kjeldsen tkj@broen-lab.com

Burdinola, S. Coop. (E)
Carretera Lekeitio, km. 53,5 - C.P. /48289
Amoroto, Bizkaia 48289 SPAIN
Tel.: +34 946 840 766 • Fax: +34 946 842 005
Ana de la Riva adelariva@burdinola.com

CHC Lab (E)
139, Techno 2-ro 1
Yuseong-Gu, Daejeon, South Korea 305 500
Tel: 82-042-933-0036 - Fax: 82-42-933-0039
Myoung Hwan Oh, international@chc-lab.com
Jorge Santos +34.917.9575.26

C.L. Andrews, LLC (A)
13843 E. Kalil Drive,
Scottsdale, AZ 85259
Tel: 480.661.5590 - Chris@clandrews.com

CIF Lab Solutions, LP (E)
53 Courtland Avenue
Vaughan, Ontario, L4K3T2 Canada
Tel: 905 738 5821 - Fax: 905 738 6537
Vince Occhipinti VP- vocchipinti@cifsolutions.com
John Shultz VP Sales - jshultz@neis.cc

*** (E) Executive Member (S) Sustaining Member (A) Associate Member (AB) Advisory Board**

© SEFA - 5th Edition Desk Reference - Version 3.0

SEFA Member Directory
(7/1/2020)

Cabinets by Design, Inc. (E)
2883 Pleasant Hill Road
Duluth, GA 30096
Tel: 770-418-1200 Fax: 770-418-1500
Kai Gilbert Proj Exec - kgilbert@cbdga.com

Cannon Design (AB)
1100 Clark Avenue, St. Louis , MO 63102
Tel: 314-241-6250
Punit Jain, Vice Pres.- pjain@cannondesign.com

Carlos Arboles, S.A. (E)
Compositor Narvaez 10, Pl Can Jardi
Rubi, Barcelona 08191 SPAIN
Tel: +34 935860780 - Fax: +34 936973226
Jeremy Loosdrecht - export@carlosarboles.com
Carlos Arboles carlos@carlosarboles.com

Case Systems, Inc. (E)
2700 James Savage Rd., Midland, MI 48642
Tel: 989 496 –9501 - Fax: 989 496 9925
Bert Bowden CEO Bert.bowden@casesystems.com
Tom Bauer - tom.bauer@casesystems.com

Chang Consulting (AB)
Tel. 917.975.7003
T. H. Chang - thchang@thchangconsulting.com

Citizen Industries (E)
57 GIDC Estate, Phase II
Naroda Industrial Estate
Ahmedabad, Gujarat INDIA 380009
Tel: +91 7 926445155 Fax: +91 79 26565642
Kamalesh Mehta -corporate@citizenindia.com

Covilla Technologies (S)
Rm 705, Xing DiTower, 1698 Yi Shan Road
Shanghai 201103 CHINA
Tel: +86.21.55698661
Celia Tu - Oper Mgr celia.tu@covilla.com

Custom Diamond International (E)
895 Avenue Munck, Laval,
Quebec CANADA H7S 1A9
Tel: 450-668-0330 Fax: 450-662-1326
Gary Mintz VP - gmintz@diamond-group.com
Costa Yfantis- coatayfantis@diamond-group.com

Creative Solutions (A)
P.O. Box 14511
Scottsdale, AZ 85260
Tel: 512-588-2002 Fax: 615-523-1240
Chip Albright –chip@chipalbright.com

DLR Group (AB)
1401 Lawrence Street Ste 1000
Denver, CO 80202
Tel: 720-904.0440
Victoria David - vdavid@dlrgroup.com

Dalton Corporation (E)
Hamarikyu Park Side Place, 5-6-1Tsukiji
Chuoh-ku, Tokyo 104-0045 JAPAN
Tel: 81-3-35496810 Fax 81-3-35496851
Toshimiesu Masuda - t-masuda@dalton.co.jp
Shinji Sunohara, Director s-sunohara@dalton.co.jp
Mr. Tatsuya Kobayashi t-kobayashi@dalton.co.jp

Delta Laboratuvar (E)
Hamidiye Mahallesi Soguksu Caddesi No. l
Kagithane, Istanbul 33408 Turkey
Tel: +90212.691.07.77- Fax +90212.210.95.64
Senol Urer, General Mgr. senol@deltalab.com.tr
Cihan Dilek - Cihan@deltalab.com.tr

Design Alternative Co., Ltd. (E)
480 Moo3, Soi Pracha Uthit 90, Pracha Uthit Road
Banklongsuan, Prasamutchedee
Samutprakarn 10290 Thailand
Tel: +66-0-028484889 Fax: +66-0-2848 4882
Somchjai Rungtiravatananon - Director
dac@design-alternative.com

Diversified Woodcrafts, Inc. (E)
300 S. Krueger Street
Suring, WI 54174
Tel: 877.348.9663 - Fax: 920 842 2499
Eddie Adkins - 601.946.7105
Brian Anundsen-
banundsen@diversifiedwoodcrafts.com

*** (E) Executive Member (S) Sustaining Member (A) Associate Member (AB) Advisory Board**

SEFA Member Directory
(7/1/2020)

Durcon (E)
206 Allison Drive, Taylor, TX 76574
Tel: 512-595-8000 - Fax 512-595-8400
Kent Cook - kcook@durcon.com
Hank Von der Bruegge, VP — HankV@durcon.com

E-Com Seating Inc., (E)
P.O. Box 86,
Cookville, TN 38503 USA
Tel: 888.696.8951 - Fax : 931.526.8838
Scott Ebersole, Pres – scott@ecomseating.com
Jim Dahl, VP Sales jim@ecomseating.com

E-Laborator Feeria SrL, (E)
19 Bucharest - Targoviste Street
District Dambovita, Baleni 137015 Romania
Tel: +40 314057688 - Fax : +40 314057689
George-Victor Cosa – sales@!e-laborator.ro
Radu Lazar - radu.lazar@e-laborator.ro

ERP Hychem SDN BHD (E)
No. 8018 KG Bukit Cherakah,
Shah Alam, Selangor, Malaysia 40150
Tel: +60.3.784.67548 - Fax: +60.3.7846.7633
Nick Ng, Gen'l Mgr nick@hychem.com.my
Raja Zarina zarina@hychem.com.my

Eagle MHC (E)
100 Industrial Boulevard, Clayton, DE 19938
Tel: 302-653-3013- Fax: 302-653-2065
Kevin King - kking@eaglegrp.com
Leslie Atherholt - latherholt@eaglegrp.com

EGNATON (A)
Muhltalstra. 61, D-64625 Bensheim
Tel: ++49 6251-704720 - Fax: ++49 6251-7047220
Egbert Dittrich- egbert.dittrich@egnaton.com

Fiberesin Industries, Inc. (E)
P.O. Box 88, N48 W37031 East Wisconsin Avenue
Oconomowoc, WI 53066
Tel: 262-567-4427 Fax: 262-567-4814
Mike MacDougal mmacdougal@fiberesin.com

Flad & Associates (A)
644 Science Drive, Madison, WI 53744
Tel: 608-238-2661 - Fax: 608 238 6727
Lucas Borck - lborck@flad.com
Jeff Steinhauer - jsteinhauer@flad.com

Flores Valles S.A. (E)
Calle Isla de Jamaica 10, Madrid 28034 SPAIN
Tel: 0034-917611094 Fax: 0034-913580567
Jean Assaad - jassaad@floresvalles.com

Flow Sciences, Inc. (E)
20 25 Mercantile Drive, Leland, NC 28451
Tel: 910-763-1717 Fax: 910-763-1220
Ray Ryan, Pres/CEO rryan@flowsciences.com
James R. Wind, CFO jwind@flowsciences.com

FunderMax GmbH (E)
Klagenfurter Strasse 87-89,
St. Veit Iglan 9300 Austria
Tel: 0043.59494 4530
Dawn Jacobs - US National Sales Mgr
Tel: +1 870 421 8848 -
dawn.jacobs@fundermax.biz

FUTURELABS LLC (E)
P.O. Box 33, P.C. 616 Birkath Al Mouz
Nizwa Sultanate of Oman
Tel: 00968-25446627 Fax: 00968-25446628
Santosh Pallicken - Pallicken@unizwa.edu.om

GCE Dru Va Central Gas Systems (E)
Weyherser Weg 8, 36043 Fulda Germany
Tel: +49 661-83930
Tom Lingenberg
Thomas.Lingenberg@gcegroup.com
Wilhelm Bischoff -
wilhelm.bischoff@gcegroup.com

GD Lab Solutions Pvt. Ltd. (E)
50/A Lamdapura Rd, Village Lamdapura, Tal. Salvi,
Vadodara-391775, Gujarat, India
Tel: 91-9974021700
Mayur Patel, Chairman- mayur.patel@gdls.in
Adhiraj Patel - adhiraj.patel@gdls.in

*** (E) Executive Member (S) Sustaining Member (A) Associate Member (AB) Advisory Board**

© SEFA - 5th Edition Desk Reference - Version 3.0

SEFA Member Directory
(7/1/2020)

Genie Scientific, Inc. (E)
17430 Mt. Cliffwood Circle,
Fountain Valley, CA 92708
Tel: 714.545.1838 Fax: 714-641-0496
Garrett LeVan—garrett@geniescientific.com

Gleeson Lab Services (S)
189 E. Washington Street, Chagrin Falls, OH 44022
Tel: 440-247-8775 - Fax: 440-247-3874
Dragan Dukich, Proj Manager 440 247 8775
ddukich@gleesonconstruction.com

Godrej & Boyce Mfg. Co., Ltd. (E)
Plant 13 Annexe, Pirojshanagar, Vikhroli
Mumbai, Maharashtra 400079 India
Tel: 91 226 796 2475
Sameer Joshi, Sr. GM -samjo@godrej.com
Arun Parameswaran arunp@codrej.com

Guangdong Beta Laboratory Furniture Co. Ltd. (E)
Room 1002-1003 Commercial Building
Garden Hotel, XinanTown, Sanshui,
Foshan, Guangdong 528100 CHINA
Tel: 86-757-87781151 - Fax: 86-757-87781151
Angie Lu, CEO angie@chinalabfurniture.com

Guangzhou Fanmei Lab System Technology Co., Ltd. (S)
13F Suite E, PWTC Tower
No. 1022 Xing Gang Dong Road Haizhu District
Guangzhou, Guandong Privince 510308 CHINA
Tel: +86 1382146566- Fax: 86-020-38029113
Jason Zhou Vice GM zhouzc@fanmei.com

H2I Group (S)
430 Industrial Boulevard, Minneapolis, MN 55413
Tel: 612-362-2114 - Fax: 612-378-2236
Ron Johnson, President
rjohnson@h2igroup.com

Herais Int'l General Trading, Ltd. (S)
3191 Jinnies Way
London, ON, N6L 0B5 CANADA
Tel: 519 .800.1353
Raja HajMahmoud—higtc@windowslive.com

HEMCO Corporation (E)
711 South Powell Road, Independence, MO 64056
Tel: 816 796 2900—Fax: 816 796 3333
Ronald Hill, CEO - ronh@hemcocorp.com
David R. Campbell, Pres davec@hemcocorp.com

Henan Innovt Intelligent Technology Co., Ltd (E)
No. 18 Funiu Road, Industry Cluster District
Tanghe County, Hanyang 473401 China
Tel: +86 157 010 845518
Crystal Wu - intop_lab@126.com

HOK (AB)
133 Peachtree St #4800,
Atlanta, GA 30303
Tel: 404 439.9000
Randy Kray Sr. Principal - Regional Leader of Science + Technology - randy.kray@hok.com

HOYE Shanghai Laboratory System Engineering Co., Ltd. (S)
Rm 305, Bldg. 18 No. 658 Jinzhong Road
Shanghai 200335 CHINA
Tel:0086-18721869128 Fax: +86-021-638-16987
Cooper Wang - Mgr cooper.wang@hoyelab.com
Andy Chen - andy.chen@hoyelab.com

Industrial Laborum Ibérica, SA (E)
R. Marcelino SÁ Pires, N.15, 5º, Sala 56
S. José Sao Lázaro, Braga 4700-924 Portugal
Tel +351 234 529 500 Fax +351-234-525 263
Hugo Lapa hugolapa@industriallaborum.com
Tiago Lapa tiagolapa@industriallaborum.com

Inomoba (E)
Netzahualpilli s/n, Cumbres de Conin
El Marqués, Queretaro 76240 MEXICO
Tel: 442.277.4510
Jose Manuel Vega Mejia, Plant Manager
Jose.vega@inomoba.com

Institutional Casework, I0nc. (E)
1865 Highway 641 North, Paris, TN 38242
Tel: 731 642 4251 — Fax: 731 642-1052
Wayne Cathey - WCathey@icisciencific.com
Mike Cook - MCook@icisciencific.com

*** (E) Executive Member (S) Sustaining Member (A) Associate Member (AB) Advisory Board**

SEFA Member Directory
(7/1/2020)

Integrated Cleanroom Tech. Pvt., Ltd. (E)
#303 Surabhi Lotus, Nagarjuna Nagar Colony,
Ameerpet, Hyderabad,
Andhra Pradesh 500073 INDIA
Tel: +91 40 23792024 Fax: +91 40 23792025
K. Koteswara Rao, VP project@icleantech.com
C.M. Rao—cmrao@icleantech.com

Inter Dyne Systems, Inc. (E)
676 East Ellis Road,
Norton Shores, MI 49441
Tel: 231-799-8760 - Fax: 231-799-9690
Jack Andree, Pres - jack@interdynesystems.com

J Talka Consulting, LLC (A)
160 Craigie Street, Portland, ME 04102
Tel: 207-210-4117
Jeff Talka, Principal - jtalka.st.arch@gmail.com

Jacobs Consultancy (AB)
303 South Broadway, Suite G20
Tarrytown, NY 10591
Tel: 914-333-1116
Josh Meyer - Principal - josh.meyer@jacobs.com

Jeio Tech Company, Ltd. (E)
153 Techno 2 Ro, Yuseong-gu
Daejeon 305-500 South Korea
Tel: 82-42-933-4296 - Fax: 82-42-933-4293
Eric Stimac—Estimac@jeiotech.com

Jiangsu Daxpro Group Co., Ltd. (E)
No. 58 Chang'An Road, Pu Zhuang Ind. Park
Wuzhong District, Suzhou 215156 China
Tel: +86-0512-66583188 Fax: +86-0512-66583178
Hong Qiang, GM - hongqiang@daxpro.com.cn
Hu Jun - sd.tsl@daxpro.com.cn

Jiangsu Kylin Science & Education Equipment Co., Ltd. (E)
7 Kaicheng Road, Kylin Street, Jiangning District
Nanjing City, Jiangsu 211135 CHINA
Tel: 86-0251-84128848 - Fax: 86-0251-84126059
Sun Yuan Cheng Gen Mgr - 1227012918@qq.com

JUSTRITE Mfg., Company L.L.C., (E)
2454 Dempster Street, Des Plaines, IL 60016
Tel: 847.612.3515 - Fax: 219.362.9296
Gregory L. Rice Sales Director -The Americas
grice@justritemfg.com

Keraplan, Srl., (E)
Via Scaldasole, 22-26
Dorno 27020 Italy
Tel: +39.0382.84019 : Fax +39.0382.848493
Luca Magai - Gen'l Mgr., luca.magai@keraplan.com

Kewaunee Scientific Corp. (E)
P.O. Box 1842, Statesville, NC 28687
Tel: 704.873.7202
Kurt Rindoks, VP Eng. 704.871.3226
kurtrindoks@kewaunee.com
Ryan Noble, Sales/Mktng 704 871 3235
ryannoble@kewaunee.com

Kirksey Architects, Inc. (AB)
6906 Portwest Drive
Houston, TX 77024
Tel: 713-850-9600
Brian P. Richard Exec VP- Sci + Tech Leader **-**
brianr@kirksey.com

LM Air Technology, Inc. (E)
1467 Pinewood Street
Rahway, NJ 07065
Tel: 732-381-8200 Ext 304- Fax:732-381-4091
Peter Daniele— LMair@att.net

LP, Srl (E)
Via Della Produzione 94
Monte Labbate, Pesaro Urbino 61025 Italy
Tel: +39-0721 481188 - Fax: +39-0721 481454
Alberto Falasconi, Owner
a.falasconi@laboratorio pesaro.com

Labconco Corporation (E)
8811 Prospect Avenue , Kansas City, MO 64132
Tel: 816.333.8811 - Fax: 816-363.0130
Tom Schwaller, VP - tschwaller@labconco.com
Kevin Gilkison, VP kgilkison@labconco.com
Luke Savage - lsavage@labconco.com

*** (E) Executive Member (S) Sustaining Member (A) Associate Member (AB) Advisory Board**

© SEFA - 5th Edition Desk Reference - Version 3.0

SEFA Member Directory
(7/1/2020)

Lab Crafters, Inc. (E)
2085 Fifth Avenue, Ronkonkoma, NY 11779
Tel: 631 471 7755 - Fax: 631 471 9162
Robert Deluca, CEO- rdeluca@lab-crafters.com
Bob Deluca Jr., Pres- bdelucajr@lab-crafters.com

Labguard India Pvt., Ltd. (E)
M6/7 Neighbourhood Complex Sector 4
Nerul (W), Navi Mumbai,
Maharashtra 400706 India
Tel: 91-022-25986090 - Fax: 91-022-25335940
Prakash Sansare —sales@labguard.biz

LabIndia Instruments Pvt., Ltd. (S)
201, Nand Chambers, LBS Marg,
Near Vandana Cinema
Thane, Maharashtra 400602 India
Tel: 91-22-27721123 - Fax: 91-22-27723164
Dr. Rohan Bhalerao -rohansb@labindia.com
Lalit Bhambhani - lalitb@labindia.com

Laborplaner Tonelli AG (AB)
Rickenbacherstrasse 29
CH-4460 Gelterkinden
Tel. +41 61 983 11 86
Dario Tonelli, Owner- dariotonelli@laborplaner.ch

Labtec, LLC. (E)
P.O. Box 4275
Sharjah, UAE 4275
Tel: 971-06-534-44-80 - Fax: 971-06-53-44-81
Muhammad Tariq, GM - mohd.tariq@labtecllc.com

Maani & Partners (E)
P.O. Box 927161 Amman-Al-Yadoudah
Main Maddabah Street
Amman 927161 Jordan
Tel: 962- 6 412 9119 - Fax: 962- 6 412 9339
Omar Tarawneh, Proj Mgr Omar_t@maani.com

McCallum Sather, Inc. (A)
286 Sanford Sve North - 2nd Floor
Hamilton, Ontario L8L6A1 Canada
Tel: 905.526.6700
Drew Hauser, Dir. DrewH@mccallumsather.com
Heather Gordon - heatherg@mccallumsather.com

Modern Lab Interior (E)
1/217 Srinivasan Nagar, Kundrathur Main Road Kovur,
T.Nagar Chennai, Tamilnadu 602 101 INDIA
Tel: 91-44-2834 6444 - Fax: 91-44-2834 6445
Rajthilak Raja rajthilakraja@gmail.com
P Nisha labinterio1972@gmail.com

Mott Manufacturing Ltd. (E)
452 Hardy Road.
Brantford, Ontario N3T-5L8 Canada
Tel: 519-752-7825 - Fax: 519-752-2895
Edward Seegmiller, CEO - Ext 211—eds@mott.ca
Mario Di Fonte Ext 218 - mdifonte@mott.ca
Andy Sinnamon - asinnamon@mott.ca

Nanjing Naudan Eng Tech Co., Ltd. (E)
7A Bldg., Fl. 2, No.104 Guanghua Rd, Qinhaui Dist.
Nanjing, Jiangsu 210014 China
Tel: +86-18951810506 - Fax: +86-25-84819979
Houzhong Li, Gen'l Mgr - lihouzhong@naudan.cn
Wang Jingying - jingyingwang@naudan.cn

Newmark Knight & Frank (AB)
Global Corporate Services
125 Park Avenue, New York, NY 10017
Tel: 646.530.4082
Tom Sonk - Thomas.Sonk@ngkf.com

NORLAB S.A.S (E)
Carrera 57 #4D - 72
Bogota, CUN 111611 Colombia
Tel: +57 1 7039578 - Fax: +57 1 8010548
Omar Sierra, CEO - info@norlabdesign.com
Lina Verano - mobiliario2@norlabdesign.com

Nuova Far S.R.L. (E)
Via Matteotti 88/B15
Prato Sesia, Italy 28077
Tel: +39 0163 852 634 - Fax: +39 0163 850 663
Albertone Michele, CEO - info@farlabs.com

Official Equipment Mfg. Co., Ltd. (E)
70 Moo7 Petchaksem 130 Raikhing
Sampran Nakhonprathom Thailand 73210
Tel: +66979599393 - Fax: +6624204997
Ms. Warisa Wingsuwan -w_warisa@hotmail.com
Ms. Srinda Wingsuwan - sales@official.co.th

*** (E) Executive Member (S) Sustaining Member (A) Associate Member (AB) Advisory Board**

SEFA Member Directory
(7/1/2020)

OnePointe Solutions, LLC (E)
1112 Swenson Boulevard
Elgin, TX 78621
Tel: 512.652.6292 - Fax: 512.982.1974
Don Carlson - dcarlson@onepointesolutions.com
Roy Richards - rrichards@onepointsolutions.com

PG LifeLink (E)
167 Gap Way
Erlanger, KY 41018
Tel: 859.283.5900 - Fax: 859.372.6272
Judith Kathman-Pres judyk@pglifelink.com
Dave Schwettman - daves@pglifeflink.com

Pal-Lab Experimental Equip. Co. Ltd. (E)
Huang Middle Road No. 193 Taodu Develop. Zone
Yixing, Jiangsu 214222 CHINA
Tel: 86-18761553338 - Fax: 86-510-87830000
Zhidi Zhou, Gen. Mgr. Zhouzhidi@pal-lab.com
Peng Zhou - web@pal-lab.com

Payette (AB)
290 Congress Street, Fifth Floor
Boston, MA 02210-1005
Tel: 617-895-1000- Fax: 617-895-1002
Charles Klee, Principal - cklee@payette.com

Perkins + Will (AB)
1315 Peachtree NE
Atlanta, GA 30309
Tel: 404-873-2300
Dan Watch, Principal -dan.watch@perkinswill.com

R.G. Vanderweil Engineers, LLP (AB)
274 Summer Street - Boston, MA 02210
Tel: 617-956-4223
John Saad, Managing Principal
jsaad@vanderweil.com

Rafael Viñoly Architects PC (AB)
50 Vandam Street
New York NY 10013
Tel: 212-924-5060
Jay Bargmann, Sr. Vice Pres. - jdb@rvapc.com

Research Facilities Design (AB)
3965 Fifth Avenue, Suite 400
San Diego, CA 92103-3107
Tel: 619-297-0159 - Fax: 619-294-4901
Lloyd Fisk, Principal - lf@rfd.com

S+B UK, Ltd., (E)
Labtec Street, Manchester M27 8SEUK
Tel: 0616 793 99333 Tax 0161 728 9149
Paul Bentham, Sales Director
paul_bentham@Splusb.co.uk

S & F Laboratory Enterprises (E)
FL 2, Build 2 No. 518 Xinzhuan Road
Xincaohejing Industrial Park
Shanghai, CHINA 201612
Tel: 86-21-61678168 - Fax: 86-21-67766336
Felice Chen, CEO—2450325420@qq.com

S.K. Powerable Co., Ltd., (E)
48/3 Moo.6, Soi Virunrard, Settakit Rd, Thamai
Krathumban, Samutsakhon Thailand 74110
Tel: +66-2431-6061 - Fax: +66-2431-6067
Pichaya Kiatrasamee - sales@skpower.co.th
Pasin Manapong

S.C.A.T. Europe GmbH (E)
Waldecker Strasse 7, Moerfelden-Walldorf
Hessen 64546 Germany
Tel: 49-0-105305 586 0 Fax: 49-0-6105305586 99
Christian Fromm - info@scat-europe.com

Samin Science Co., Ltd. (E)
27 Emtibeui 4-ro, 48Beon-gil, Danwon-gu,
Ansan, Gyeonggi-do, 15658 South Korea
Tel: 82-31-433-8941 Fax: 82-31-433-8943
Selena Jang - pes@saminsci.com
Alice Park - global@saminsci.com

SAN Group (E)
Room 1101 No. 18 Gufang Road
Shanghai, 201102 CHINA
Tel +021 34120616—Fax +021 34120568
Kitty Wang, Director export@sanchina.com.cn
Albert Xie - albert.xie@sanmfg.com

*** (E) Executive Member** **(S) Sustaining Member** **(A) Associate Member** **(AB) Advisory Board**

© SEFA - 5th Edition Desk Reference - Version 3.0

SEFA Member Directory
(7/1/2020)

Sani Metal, LTD. (E)
5170 Rideau,
Quebec, Quebec City G2E5S4 CANADA
Tel 418.872.5170—Fax 418.872.5179
Yves Gendreau ygendreau@sanimetal.com
Jean Philippe Aubin jaubin@sanimetal.com

SEE, Ltd., (S)
20 Bruner Road Earlstrees Industrial Estate
Corby, Northamptonshire NN17 4jW UK
Tel: 44(0)1883717033 - Fax: 44(0)1883717890
Robert Bousfield- Robert.bousfield@bousfield.com
Robert Thompson -
Robert.Thompson@seeltd.cloud

SelecTech, Inc. (S)
33 Wales Avenue,
Avon, MA 02322
Tel: 508.583.3200
Tom Ricciardelli, CEO tricca@selectech.com
Joe Berk, Director of Sales jberk@selectech.com

Shandong Vanboss Lab Eng Co., Ltd. (S)
No. 102 Xiangyang Road, Chengyang District
Qingdao, Shandong 266000 CHINA
Tel: +86 53280998053 - Fax : +86 532 80990860
Andy Sun Int'l Mkting Mgr andysuen@wobosi.com
Zhang Xueliang qewobosi@126.com

Shanghai Aosh Ind. Dev. Co., Ltd. (S)
3/F Bldg D-1 No. 128 Shenfu Road,
Xinzhuang Ind. Dist., Shanghai 201108 CHINA
Tel: 86-21-52100002 Fax: 86-21-52100001
Zhichao Chen, General Mgr - cc@aoshlab.com
Joyce Wang - joyce.wang@aoshlab.com

Shanghai Changxiong Laboratory Equipment Tech Co., Ltd. (S)
Room 2107, No. 2,775 Long Siping Road
Shanghai 200092 CHINA
Tel: 86-18616973497
Zixing Chen, General Mgr - czx333666@sina.com

Shanghai Formica Decorative Material Co., Ltd. (E)
No. 7189 Songze Avenue, Qing Pu District
Shanghai 201706 China
Tel: +86.21.60102688 Fax: +86.21.60102658
Ancy Chen, Product Manager
ancy.Chen@formica.com

Shanghai Guange Industrial Co., Ltd. (E)
Rm 310, Unit 5, Xuhui Plaza, 28 Lane Damba Road
Putuo District, Shanghai 200062 China
Tel: +86.18652251072
Yijun Wu, General Mgr., yijunca1@163.com
Tina Zhang - 2880165197@qq.com

Shanghai Hanguang Ind. Co. Ltd. (S)
Room 7A Blk A No. 209 Wending Road
XuHui District Shanghai, 200030 CHINA
Tel: 86-21-64394396 -Fax: 021-64394396-822
Sophie Deng— sophie@ hanguangsh.com

Shanghai HuShi Chemical Reagent & Analysis Instrument Co., Ltd. (E)
7/F No. 26.28 Jiangchang No. 3 Road
Shanghai, China 200436
Tel: 86-021-36321658 - Fax: 86-021-36321580
Qian Mei Ling shhsqml@126.com

Shanghai Road Lab Equip. Co. Ltd. (E)
Room404, Building B, No. 668 Xinzhuan Road
Songjiang District, Shanghai 201612 CHINA
Tel +021 050373141—Fax +021 34720910
Bob Xu - Gen. Mgr. bob.xu@21toplab.com
Frances Zhang - frances.zhang@21toplab.com

Shanghai Ruanqi S&T Co., Ltd., (A)
Room 504B, No. 650 Xinzhuan Highway
Songjiang District 201612 CHINA
Tel: +86.13564649666
Hehu Lin – linhehu@ict2.cn

Shanghai Surpeak Eng. Tech. Co., (S)
2F, No. 2 Building, No. 2653 Hunan Road
Shanghai 201315 CHINA
Tel. 86.21.60975596 —Fax 86.21.60975517
Weijun Chen, Managing Director - cwj@surpeak.cn
Yangjun Chen - cyj@surpeak.cn

*** (E) Executive Member (S) Sustaining Member (A) Associate Member (AB) Advisory Board**

SEFA Member Directory
(7/1/2020)

Shanghai Tech Labway Co., Ltd. (E)
21F, No. 1200 Pudong Avenue
Pudong District, Shanghai 200135 CHINA
Tel: 86-021-58523132 Fax: 86 –021-58520485
Herrick Ho, Gen Mgr. - herrick@techlab.com.cn
Sandy Wang - sandy@techlab.com.cn

Shanghai Thinkreal Lab Equipment Co., Ltd. (S)
Room 207, Building B, No. 668 Xinzhuan Road
Songjiang District, Shanghai 201612 CHINA
Tel +86-021-57868298—Fax +86-021-57868298
Bob Xu - export@thinkreallab.com

Shanghai Titan Scientific Co., Ltd. (S)
Room 1110 Building 1, No. 100 Qinzhou Road,
Xuhui District, Shanghai China 201611
Tel: +86-021-60878333
Fan Yaping, Project Director - fyp@titansci.com

Shanghai TS Scientific & Technology Equip. Co., Ltd. (S)
Rm 1511, No. 5 Oasis Building, Lane 1628
Jinshajiang Road, Putuo District Shanghai 200333
Tel: 86-021-51987060 - Fax: 86-021-54305171
Cai Jia Ming, Manager 2162200437@qq.com
Jin Ping - 843736129@qq.com

Shanghai Topsci Lab Equip Co., Ltd. (S)
No. 3131 Jinsha Jiang Rd, Bldg 9, C Zone 5th FL
Shanghai, 201824 CHINA
Tel +021 51691848 —Fax +021 51685648
James.liu@topsci-lab.com

Shanghai WeiGui Lab Equip Co., Ltd. (S)
Room 605 #4, No.3599 Qixin Road
Shanghai, 201100 CHINA
Tel +86.21.64790875
Xia Jun, General Mgr - jun.xia@anachem.net

Shanghai Weizhen Inds. Co., Ltd. (E)
Bldg 5 No. 156 Changli Road, Anting Town
Jiading District, Shanghai, 201805 CHINA
Tel +021 51691848—Fax +021 51685648
Susie Ding Sales Mgr - susieding@onuschina.cn
Cheng Wei Feng - 13818811816@126.com

Shanghai Zhongling Lab Equipment Group Co., Ltd. (E)
No. 518 Dongxua Road, Dongling Town
Songjiang District, Shanghai 201619 CHINA
Tel +86 139 17657878 - Fax +86 21 57870668
Ren Xudong, Gen'l Mgr zl@zllab.com.cn

Sheldon Laboratory Sys. (E)
102 Kirk Street, Crystal Springs, MS 39059
Tel: 601-946.7105 - Fax: 601-892-3311
Eddie Adkins, Pres -eadkins@sheldonlabs.com

Shenzhen Chuangmei Ind. Co., Ltd, (E)
16F, 9th Bldg, Baoneng Science Park
Longhua District,
Shenzhen, Guangdong 518000 - CHINA
Tel: 86-75588869331- Email: marketing@volab.cn
Catherine Song - Marketing Director

Shenzhen JHS Industrial Co., Ltd. (E)
Rm 604-605 3rd Bldg., Huayangnian Meinian Plaza
No. 8 Xiinggong Road, Nanshan District
Shenzhen, Guangdong 518067 China
Tel: 86-75526430569 - Fax: 86-75526430853 -
Hong Jinxia - 120658093@qq.com
Zhu Xiaoxi, Gen Mgr. - 13802583710@163.com

Simmons North America, Inc., (E)
Unit 11, 10 Wrangler Place SE
Calgary, AB T1XOL7 Canada
Tel: 403.710.2360
Harry Simmons - harry@epoxyworktops.com
David Simmons - David@epoxyworktops.com

Sinopharm Chemical Reagent Co., (E)
No. 52 Ningbo Road - Shanghai 200002 CHINA
Tel: 86-21-63211830 - Fax: 86-21-63391322
Huan Hui, Manager 13917034163@163.com
Wendy Zhu - Zhuwendi1@sinopharm.com

SmithGroup (AB)
Arizona Center, 455 North Third St., Suite 250
Phoenix, AZ 85004
Tel: 602.824.5385
Diane Kase RID LEED AP, Sr. Lab Planner
diane.kase@smithgroup.com
Regal Leftwich -Regal.Leftwich@smithgroup.com

*** (E) Executive Member (S) Sustaining Member (A) Associate Member (AB) Advisory Board**

© SEFA - 5th Edition Desk Reference - Version 3.0

SEFA Member Directory
(7/1/2020)

SMRT Architects & Engineers (A)
144 Fore Street
Portland, ME 04101
Tel: 207.321.3856
Emily Kerswell - ekerswell@smrtinc.com
Fran Harrison - fharrison@smrtinc.com

Spectron Gas Control Sys GmbH (E)
Fritz-Klatte-Strasse 8
Frankfurt 65933 Germany
Tel: +49.69.38016.241 - Fax: +49.69.38016.200
Andreas Alker - Product Manager
andreas.alker@spectron.de

Steel Case India (E)
Ground Fl. 40 Nagardas Mansion, Bhagat Singh Rd
Vile Parle (West), Mumbai 400 056 (India)
Tel: 91-22-2671 4967—Fax: 91-22-2628 8177
Kamlesh Bhuta Proprietor - kjb@scind.in
Shubhendu K. Bhuta - skb@scind.in

Stevens Industries, Inc. (E)
704 West Main Street, Teutopolis, IL 62467
Tel: 217-857-7173 - Fax: 217-857-7101
Ed Wiessing - Edw@stevensind.com
Caitlin Blake - caitlinB@stevensind.com

Suzhou Glymate Lab Technology Development. Co., Ltd. (E)
No.29 Tian E Dang Road Wuzhong Dist.
Suzhou City, Jiangsu 215000 China
Tel: 86-512-6519-8803 - Fax: 86-0512-6519-8813
Zhao Ying - zhaoying@labgreat.com
Ma Ya Xing - HR@labgreat.com

Suzhou Tefujia Lab System Engineering Co., Ltd., (E)
No.1066 He-An Road, Linhu Town, Wuzhong Dist.
Suzhou, Jiangsu 215105 China
Tel: 86-512-6876-6658 - Fax: 86-512-66693-5234
Delong Wang Gen.Mgr. 362433235@qq.com
Ang Yi - yi@tefjia.com

Suzhou Tnew Lab System Eng.,Co., (S)
2502 Wuzhong Mall Bldg.
No. 388 Dongwu South Road, Wuzhong District
Suzhou 215100 China
Tel: 86-512- Fax: 86-0512 68363936
Steven Zhao, GM - steven.zhao@tnewlab.com
Emily Chen Emily@tnewlab.com

Symbiote, Inc. (E)
300 N. Centennial Street
Zeeland, MI 49464
Tel: 661.772.1790
Barrett Randolph, Dir Bus Develop
brandolph@symbiote.com

TFI Inline Design Corp. (E)
5658 East 58th Avenue
Commerce City, CO 80022
Tel: 303-288-6823 - Fax: 303-288-6876
Frank Conner, Pres fconner@tfiinlinedesign.net

TMI Systems Corporation (E)
050 South Third Avenue West
Dickinson, ND 58601
Tel: 701-456-6716 - Fax: 701-456-6700
Kevin Kovash, Sr. Vice President - 701-456-6355
Kevin.kovash@tmisystems.com

Tecnología en Laboratorios, S.A. de C.V. (E)
Acceso A #109-7 Fraccionamiento Industrial Jurica
Queretaro, MEXICO 76120
Tel: 52-442-218-5229 Fax: 52-442-218-1800
Enrique de la lata Gomez -
enriquedelallata@tecnolab.com.mx
Gabriel Gomez - gdelallata@tecnolab.com.mx

Texlab Scientific Equipment Co., Ltd. (E)
No. 182 Lane 2566 Dushi Road, Minhang District
Shanghai, PRC CHINA 201108
Tel: 86-21-52275371 - Fax: 86-21-52275371816
Annie Wang, Gen'l Mgr - annie@texlab.com.cn
Mei Chen - may@texlab.com.cn

*** (E) Executive Member (S) Sustaining Member (A) Associate Member (AB) Advisory Board**

SEFA Member Directory
(7/1/2020)

The S/L/A/M Collaborative (A)
80 Glastonbury Blvd., Glastonbury, CT 06033
Tel: 860.368.4135- Fax: 860.657.3141
Dave Edwards - dedwards@slamcoll.com

TOOK Tech Co., Ltd. (E)
F11, Bldg 10, No. 8 Middle Huarong Rd.
Yizhuang Economic-Technological Dev. Area
Beijing 100176 CHINA
Tel: 86 01-57862368 -
Susie Liu - liuyanyan@tooktops.com
Dong Guobin dongguobin@139.com

Trespa NA (E)
350 Fifth Avenue, Ste 4610,
New York NY 10118
Tel: 1-800-487-3772
Ingo Sternitzke—i.sternitzke@trespa.com

Ultra Labs, Inc. (E)
1180 Jiujing Road, Songjiang Hi-tech Park
Shanghai 201615 CHINA
Tel: 86-21-676-96869 - Fax: 86-21-676-96826
Jason Mao, Gen. Mgr- jasonmao@ultralabs.com.cn

Vacuubrand, Inc. (E)
11 Bokum Road, Essex, CT 06426
Tel: 860.767.5341 ext 172—Fax: 860.767.2563
Sean Leahy -sleahy@vacuubrand.net
Peter Beck - 312.972.3993 pbeck@vacuubrand.net

VJ Cardona Consulting (AB)
2715 North Ocean Boulevard
Ft. Lauderdale, FL 33308
Tel: 313.655.8443
Victor Cardona - vjcardona@aol.com

Waldner Laboreinrichtungen (E)
Haidoesch 1, 88239
Wangen im Allgaeu, Germany
Tel: +49 7522 986-0 Fax: 49 7522 986-79-480
Michael Maucher - michael.maucher@waldner.de
Javier Arguedas-javier.arguedas@waldner-inc.com

Water Saver Faucet Co. (E)
701 West Erie Street,
Chicago, IL 60654
Tel: 312-666-5500 - Fax: 312-666-5501
Steven Kersten, Pres— skersten@wsflab.com
Michael Straughn - mstraughn@wsflab.com

Wesemann GmbH (E)
Max-Planck-Strasse 15-25,
28857 Syke Germany
Tel: +49. 4242.594.0 - Fax: +49.4242.594.150
Robert Wesemann, Managing Director
robert.wesemann@wesemann.com

Wilsonart Shanghai (E)
Rm 1118 No. 2025 Zhongshan West Road
Shanghai 200235 China
Tel: +86 021 64397070 - Fax: +86 21 64394223
Peggie Zhao: Peggie.Zhao@wilsonart.com.cn

Withee Works (A)
1540 Capitol Drive, Ste 104,
Green Bay, WI 54303
Tel: 920.737.8477
David Withee, Pres. - dwithee@witheeworks.com

Wood Metal Industries (E)
100 East Sherman Street
Selinsgrove, PA 17870
Tel: 570-374-1176 - Fax: 570-374-5010
Scott Groce, Vice Pres. scottg@wood-metal .com
Karen Saylor karens@wood-metal.com

Woods Bagot (AB)
LEVEL 2 - 60 Carrington Street
Sydney NSW - PO BOX N19
Grosvenor Place NSW 1220
TEL +61 2 9249 2662
Leslie Ashor - leslie.ashor@woodsbagot.com

Wood Metal Industries (E)
100 East Sherman Street
Selinsgrove, PA 17870
Tel: 570-374-1176 - Fax: 570-374-5010
Scott Groce, Vice Pres. scottg@wood-metal .com
Karen Saylor karens@wood-metal.com

*** (E) Executive Member (S) Sustaining Member (A) Associate Member (AB) Advisory Board**

© SEFA - 5th Edition Desk Reference - Version 3.0

SEFA Member Directory
(7/1/2020)

Wuxi Pulisite Lab Equipment Technology Co., Ltd. (E)
No. 35 Chuangye Road, Heqiao Industrial Zone
Yixing 214211 CHINA
Tel: +86 13914226924 - Fax: +86(0)510 81763282
Lichuntao, Manager wxplst@163.com

Xiamen Yixu Lab Equip.Co., Ltd. (E)
No. 6 Fangyang West Road, Maxiang Town,
Xiangan District, Xiamen, Fujian 361101 China
Tel: +86592-5518748 - Fax: +86 5925516452
Jim Dongxu CEO - jimdongxu@yixulab.com
Zeng Xiaolin - zxl@yixulab.com
Bai Yanyan byy@yixulab.com

Yamato Scientific Co., Ltd. (E)
Harumi Toriton Square Y-36F,1-8-11 Harumi
Chuo-ku, Tokyo 104-6136 JAPAN
Tel: 81-3-5548-7130 Fax: 81-3-5548-0131
Nobuo Kakehi, Director kakehi@yamato-net.co.jp
Yuji Yamaguchi - YamaguchiY@yamato-net.co.jp

Yangzhou Tianhui Lab Equip & Env. Protection Engineering Co., Ltd. (E)
No. 52 Shisha Road Shiqiao Industrial Park
Yangzhou Development Zone
Yangzhou, Jiangsu 225000 CHINA
Tel: 86-0514-87571699
Lang Lin 42288682@qq.com
Qibing Zhu 41-0370054@qq.com

Zephirus Shanghai Intelligence & Technology Co. Ltd. (S)
15/F Innovation Building, 1009 Yi Shan Road
Shanghai 200233 CHINA
Tel: 86-21-51693045 - Fax: 86-21-61927276
Alwin Wang, Gen Mgr. alwin@zephirustek.com
Nelson Yang —Nelson@zephirustek.com

SEFA's Advisory Board

Co-Chairmen

Lloyd Fisk*, Research Facilities Design
Charles Klee*, Payette Associates

Leslie Ashor**
Woods Bagot

Jay Bargmann**
Rafael Viñoly

Victor Cardona***
VJ Cardona Consulting

TH Chang
Chang Consulting

Victoria David
DLR Group

Abbie Gregg
AM Technical Solutions

Punit Jain**
Cannon Design

Diane Kase
SmithGroup

Randy Kray
HOK

Josh Meyer
Jacobs Consultancy

Bruce Nepp
abell nepp

Brian Richard
Kirksey Architects

John Saad*
R.G. Vanderweil Engineers, LLP

Tom Sonk
Newmark Knight & Frank

Dario Tonelli
Labor Planer, Tonelli A.G.,

Dan Watch
Perkins+Will

***Advisory Board Membership Committee Member**
****Lab of the Year Committee Member**

© SEFA - 5th Edition Desk Reference - Version 3.0

SEFA's Past Chairmen

N. Roy Anderson
Fisher Scientific

Joseph P. Ingarra
Duralab

Kenneth Hanson
Hanson Furniture

Robert Antonio
Prime Industries

Roger Lethander
Leonard Peterson & Co.

Chip Albright
Jamestown Metal

Dave Withee
Broen A/S

William Stover
Mott Manufacturing Ltd.

Mike Kloosterman
The Durcon Company

Ken Dixon
Air Control, Inc.

Richard Johnson
Thermo Fisher Scientific

Dana Dahlgren
Kewaunee Scientific

Kevin Kovash
TMI Systems Design Corp.

Tom Schwaller
Labconco Corporation

Scientific Equipment & Furniture Association

BY-LAWS

SEFA World Headquarters
65 Hilton Avenue
Garden City, NY 11530

Tel: 516-294-5424
www.sefalabs.com

SEFA SPELLS SAFE

Table of Contents

		Page
Article 1.	**Name**	**27**
Article 2.	**Purpose**	**27**
	Section 2.1 General Objectives & Scope	
Article 3.	**Membership**	**27**
	Section 3.1 Classes of Membership	
	Section 3.2 Election to Membership	
	Section 3.3 Right to Vote, Hold Office and Receive Membership Benefits	
	Section 3.4 Use and Display of SEFA Logos and Trademarks	
Article 4.	**Dues**	**30**
Article 5.	**Government**	**30**
Section 5.1 Officers		
	Section 5.2 Board of Directors	
	Section 5.3 Nomination to the Board of Directors	
	Section 5.4 Duration of Tenure	
	Section 5.5 Removal of Officers and Directors	
	Section 5.6 Duties of the Chairman	
	Section 5.7 Duties of the Vice Chairman	
	Section 5.8 Duties of the Secretary/Treasurer	
	Section 5.9 Bonding of Officers	
Article 6.	**Committees**	**32**
Article 7.	**Meetings**	**32**
	Section 7.1 Annual Meeting of the Association	
	Section 7.2 Special Meetings of the Association	

Table of Contents

Page

Section 7.3 Quorum at the Meetings of the Association

Section 7.4 Voting by Members of the Association

Section 7.5 Quorum and Voting Annual Meeting of the Association

Section 7.6 Ratification

Article 8. Termination of Membership **33**

Section 8.1 Non-Payment of Dues

Section 8.2 Resignation

Section 8.3 Suspension or Expulsion

Section 8.4 Reinstatement of Membership

Article 9. Interest in Association Funds and Property **34**

Article 10. Dissolution **34**

Article 11. Indemnification of Directors and Officers **34**

Article 12. Rules and Regulations **35**

Article 13. Amendments **35**

SEFA Meetings Policy Statement **35**

© SEFA - 5th Edition Desk Reference - Version 3.0

BY-LAWS

OF THE

SCIENTIFIC EQUIPMENT AND FURNITURE ASSOCIATION

(As Amended November 18, 2016)

Article 1. Name

The name of the Association shall be the SCIENTIFIC EQUIPMENT AND FURNITURE ASSOCIATION.

Article 2. Purposes

Section 2.1 General Objectives and Scope

(a) The association was founded to promote the scientific equipment and furniture industry and to improve the quality, safety and timely completion of laboratory facilities in accordance with customer requirements. The Scientific Equipment and Furniture Association consists of firms, architects, lab planners, consultants and dealers, which have as one of their principal businesses the manufacture or design of scientific equipment or furniture or laboratories. These firms sell to research, industrial, life sciences, education and/or government laboratories.

(b) In furtherance of the foregoing, and with full recognition of the right of each member individually to determine its individual business policies, the objectives of the Association shall be:

1. To strengthen the capabilities of its members through education and information exchange.

2. To provide a forum to its members through which the industry's objectives can be furthered.

Article 3. Membership

Section 3.1 Classes of Membership

There shall be the following four classes of membership in the Association:

(a) Executive Member:

To be eligible for Executive Membership in the Association the applicant shall complete the SEFA Membership Qualification Statement. The SEFA Board of Directors shall then determine that the following qualifications have been established:

1. Applicant must control the design and manufacture of one or more of the following laboratory grade products: laboratory furniture, fume hoods, laboratory

work surfaces, fixtures, or related laboratory equipment. Control to be defined as conducting actual design and fabrication, internally, at applicant owned/leased and controlled, manufacturing facility. Fabrication out-sourcing to non-applicant owned or leased facilities does not qualify as eligible work.

2. Applicant must have successfully completed at least ten (10) laboratory furniture projects within three (3) years of submitting its application for Executive Membership.

3. Applicant shall submit two (2) letters of reference - one from a supplier that applicant has a current business relationship with and one from an owner, architect or lab planner that the applicant has worked with. In addition, applicant must provide the name of a SEFA Member in Good Standing who will support its application in writing.

4. Applicant shall also submit a certified test report from a SEFA-approved testing facility, establishing that the applicant manufactures laboratory furniture or related equipment at its manufacturing facility which complies with at least one of SEFA's Recommended Practices in effect at the time the membership application is submitted by the applicant.

5. All Companies which are Executive Members as of the date these amended by-laws become effective shall have twelve (12) months from that date to submit their product for testing in accordance with Section 3.1 (a)(4) above. The Member will be given an additional six (6) months to establish that their product is SEFA compliant.

6. In determining a member or applicant's qualifications to become or remain an Executive Member, the Board reserves the right to require a factory inspection by a SEFA –approved testing facility. Such inspection shall be at the expense of the applicant or member.

(b) Advisory Board Member:

1. Advisory Board Members must belong to a professional organization such as AIA, ASHRAE, IFMA or a comparable organization outside of the United States, for a period of at least ten (10) years and have at least eight (8) years of experience in planning and designing laboratory spaces or buildings.

2. Advisory Board Members must also have obtained a degree in architecture or engineering from an appropriately accredited college or university and served as a project architect, lab planner, chief engineer or project manager on at least five (5) lab projects.

3. Advisory Board Members shall be nominated and approved by a majority vote of SEFA's Board of Directors. Advisory Board Members shall serve for a term of at least three years. The number of Advisory Board Members shall be at the discretion of the Board of Directors.

(c) Sustaining Member:

To be eligible for Sustaining Membership in the Association the applicant shall complete the SEFA Membership Qualification Statement. The SEFA Board of Directors shall then determine that the following qualifications have been established:

© SEFA - 5th Edition Desk Reference - Version 3.0

l. A Sustaining Member applicant shall be a company that purchases laboratory furniture and/or related equipment manufactured by others and enters into subcontract agreements to facilitate laboratory building projects or is a company that installs laboratory furniture and related equipment manufactured by others. All sustaining members must establish that they sell or install at least one (1) product made by a SEFA Executive Member that has been successfully tested to at least one (1) of the SEFA Recommended Practices.

2. Applicant must have successfully completed at least ten (10) laboratory furniture projects within three (3) years of submitting its application for Sustaining Membership.

3. Applicant must submit two (2) letters of reference - one from a supplier that applicant has a current business relationship with and one from an owner or an architect or lab planner that the applicant has worked with. In addition, applicant must provide the name of a SEFA Member in Good Standing who will support their application in writing.

(d) Associate Member:

Associate Members shall consist of architects, lab planners/consultants, facility managers and others as deemed appropriate by the Board.

Section 3.2 Election to Membership

(a) Application for membership in the Association shall be in writing on such forms as may be prescribed by the Board of Directors for that purpose, which shall request such relevant information consistent with these By-Laws. Election to membership in the Association shall be by a two-thirds vote of the Board of Directors of the Association.

(b) All members shall have full intention to attend SEFA meetings, web conferences, participate in the standards writing process to the best of their ability and dedicate the necessary time and energy to help support and increase SEFA's reputation as the premier, global association fostering the use of "Laboratory Grade" furniture and equipment and insuring excellence in the planning, design and installation of laboratory projects.

(c) Every SEFA Member and applicant shall acknowledge annually that they have not and will not in the future violate the Code of Ethics and will be bound by the Code of Ethics Rules and Procedures.

Section 3.3 Right to Vote, Hold Office and Receive Membership Benefits

Each Executive Member shall be entitled to one vote. Representatives of Executive Members shall hold office in the Association. Each Executive Member shall designate in writing its official voting representative and an alternate. Votes in the general affairs of the Association shall be cast only by the officially designated representative of the Executive Member, or in his absence, by his designated alternate.

Section 3.4 Use and Display of SEFA Logos and Trademarks

Only members in good standing shall have the right and license to display or use SEFA logos, copyrighted materials, service marks, trademarks or other SEFA proprietary information. The manner in which such logos, copyrighted materials, service marks, trademarks and other information may be displayed or used shall be determined by the Board of Directors.

Article 4. Dues

Association dues for executive, sustaining and associate members shall be fixed from time-to-time by the Board of Directors, and shall be approved or ratified by a majority vote of the Executive Members of the Association present and entitled to vote at a meeting at which a quorum is present.

Association dues for members are an annual obligation and for Executive and Sustaining Members, shall be calculated on the aggregate sales volume, where appropriate, including both domestic and international volume, generated by the Executive or Sustaining Member in its most recently completed fiscal year. Such calculations shall include the relevant sales volume of each member, including its divisions, affiliates and subsidiaries. The Board of Directors shall determine the time or times that dues shall be payable by members, and may provide for the pro-ration of such dues.

Article 5. Government

Section 5.1 Officers

The officers of the Association shall be a Chairman, a Vice-Chairman, a Secretary/ Treasurer and the Immediate Past Chair. All of the officers shall serve without compensation. Each officer shall be elected annually, if necessary, by a majority vote of the Executive Members present and entitled to vote at the Annual Meeting of the Association.

In the event of death, resignation, or incapacity to act of any officer or director of the Association, the vacancy so created shall be filled by the Board of Directors.

Section 5.2 Board of Directors

The management of the affairs of the Association shall be vested in the Board of Directors, which shall consist of the Chairman, the Vice-Chairman, the Secretary/ Treasurer, the Immediate Past Chairman and five (5) other at large directors who shall be elected by a majority vote of the members present and entitled to vote at the annual meeting of the Association. The Board shall include one Advisory Board Member. Membership on SEFA's Board is not transferable to any other Company representative or individual.

Section 5.3 Nomination to the Board of Directors

No later than sixty (60) days prior to the Annual Meeting, the Immediate Past Chair of the Board shall commence consultations with the Strategic Goals Committee and

© SEFA - 5th Edition Desk Reference - Version 3.0

any members expressing an interest in board service. After such consultations have been completed the Immediate Past Chair will submit a proposed slate of Officers and Directors. This proposed slate of Officers and Directors will be emailed to the members at least thirty (30) days prior to the Annual Meeting. Nominations for any such office or offices may also be made from the floor by any duly designated representative of an Executive Member at the Annual Meeting of the Association.

Section 5.4 Duration of Tenure

Officers and Directors shall be elected for a term of two (2) years and thereafter until a successor shall have been duly elected and qualified, provided that no board member shall serve more than four (4) consecutive two (2) year terms in office.

Section 5.5 Removal of Officers and Directors

Any officer or director may be removed for due cause by an affirmative vote of two-thirds of the Board of Directors. Failure to attend two out of four of the most recent Board Meetings may constitute due cause for removal.

Section 5.6 Duties of the Chairman

The Chairman shall preside at all meetings of the Association and the Board of Directors. He shall perform such duties as may be required or permitted by these By-Laws or as the Board of Directors may from time to time direct.

Section 5.7 Duties of the Vice Chairman

The Vice-Chairman shall preside at all meetings of the Association or of the Board of Directors in the
absence of the Chairman. The Vice-Chairman shall also perform such other duties as

the Chairman or the Board of Directors may from time to time direct.

Section 5.8 Duties of the Secretary/Treasurer

The Secretary/Treasurer shall keep the minutes of all Board meetings and shall have charge of all corporate files, including the minutes of the Association. He shall prepare and distribute appropriate minutes of each Association meeting. He shall perform such other duties as are common to the office.

The Secretary/Treasurer shall have charge of all securities and bank accounts, and shall have the authority to transfer funds as needed to meet the Association's operating expenses. He shall exercise surveillance over all investments of the Association. He shall report periodically to the membership on the financial condition of the Association.

With the approval of the Board of Directors, the Secretary/Treasurer may delegate certain of his responsibilities to such staff members as may be retained by the Association.

Section 5.9 Bonding of Officers

The Board of Directors, at its discretion, may bond any officer or employee with an adequate bond for the faithful performance of his duties.

Article 6. Committees

Section 6.1 Committees

At the annual meeting of the Association, each committee shall elect two representatives to serve as co-chairs of their respective committees for the ensuing year. All committees shall continue their functions until the next annual meeting of the Association. The Chairman of the Board may appoint such Special Committees as the occasion may require.

Article 7. Meetings

Section 7.1 Annual Meeting of the Association

(a) The Annual Meeting of the Members of the Association shall be held at such time and place as the Board of Directors may determine. Written or printed notice shall be emailed to each member not less than thirty (30) days before the date of the meeting.

(b) Whenever the Board of Directors by a majority vote of all of its voting members, at either a meeting or by letter ballot, shall determine for any reason it is not in the interest of the Association to hold the annual meeting, then no such meeting shall be required to be held. Under such circumstances the Board of Directors may, at its discretion, conduct by letter or email ballot such business as would normally be conducted at any annual meeting or meetings thus omitted.

Section 7.2 Special Meetings of the Association

The Secretary/Treasurer shall call a Special Meeting of the Association when so requested by a majority of the Board of Directors, or by written request of one third of the voting members of the Association. Electronic notice stating the place, day and hour of the special meeting, and the purposes for which it is called, shall be emailed to each member not less than thirty (30) days before the date of the meeting. No business other than that specified in the notice of the meeting shall be transacted at the Special Meeting.

Section 7.3 Quorum at the Meetings of the Association

A majority of the voting membership present at any meeting of the members of the Association shall constitute a quorum, and in case there shall be less than this number, the presiding officer may adjourn the meeting from time-to-time until a quorum be present.

© SEFA - 5th Edition Desk Reference - Version 3.0

Section 7.4 Voting by Members of the Association

Voting in the general affairs of the Association shall be confined to active executive members, with each such member being entitled to one vote through or by the duly designated voting representative. Proxies will not be allowed unless specifically authorized by the Board. Unless otherwise provided by these By-Laws, a majority of the votes entitled to be cast by members present at a meeting at which a quorum is present shall be required. Any action required or permitted to be taken at a meeting of the members may be taken without a meeting if consent in writing, setting forth the action so taken, is signed by all of the members entitled to vote with respect to the subject matter thereof.

Section 7.5 Quorum and Voting

A majority of the Board of Directors shall constitute a quorum for the transaction of business. Unless otherwise provided by these By-Laws or the Code of Ethics Rules and Procedures, the act of a majority of the Board of Directors present at a meeting at which a quorum is present shall be the act of the Board of Directors. Any action required or permitted to be taken by the Board of Directors at a meeting may be taken without a meeting if consent in writing, setting forth the action so taken, is signed by all of the Directors.

Section 7.6 Ratification

In the event that a quorum shall not be present at any duly called meeting of the members, the Board of Directors, or of any committee, the members present and entitled to vote at any such meeting may take such action as they may elect subject to subsequent ratification by a letter ballot of a majority of the members thereof or at a duly called subsequent meeting at which a quorum is present.

Article 8. Termination of Membership

Section 8.1 Non-Payment of Dues

The Board of Directors shall terminate the membership of any member of the Association for non-payment of dues.

Section 8.2 Resignation

Any member may resign at any time from the Association by written notice to the Executive Director, provided that all financial obligations payable to the Association shall have been fully discharged.

Section 8.3 Suspension or Expulsion

(a) A member who shall violate any provisions of these By-Laws, or who shall refuse or neglect to comply with any resolution of the Association or of the Board of Directors, may have his membership terminated by the Board of Directors; provided, however, that such member shall be given prior written notice of the contemplated action by the Board of Directors and the reason or reasons thereof, with the right to appear and be heard before the Board of Directors prior to the taking by the Board of Directors of

any final action with respect to such termination of membership. Any such termination of membership shall occur only by an affirmative vote of three-fourths of the members of the Board of Directors.

(b) **Code of Ethics** - All members shall acknowledge in writing by an authorized agent, that they will be bound by SEFA's Code of Ethics and the Rules and Procedures for the enforcement of the Code of Ethics. Violation of the Code of Ethics may result in the termination of membership or such other action as authorized by the Rules and Procedures.

Section 8.4 Reinstatement of Membership

Any application for reinstatement to membership of a former member shall be treated in accordance with the applicable provisions of Article "3" of these By-Laws. No such applicant shall be reinstated to the membership until he has discharged all past indebtedness to the Association.

Article 9. Interest in Association Funds and Property

Any member who shall resign, or whose membership in the Association shall have been terminated for any reason, shall immediately relinquish and forfeit all interest in any funds or other property belonging to the Association including the right to display in any manner SEFA logos, copyrighted materials, service marks, trademarks or other proprietary information.

Article 10. Dissolution

In the event that the Association shall be dissolved, its net assets remaining after provision for the payment of all of its debts and liabilities shall be distributed to such other organization or organizations having the same or similar purposes of this Association as the Board of Directors shall determine, subject to ratification by the membership of the Association.

Article 11. Indemnification of Directors and Officers

The Association shall indemnify and hold harmless each person who is now or shall hereafter serve as a director or officer of the Association, from and against any and all claims and liability, whether the same are settled or proceed to judgment, to which such person shall have become subject by reason of his having heretofore or hereafter been a director or officer of the Association, or by reason of any action alleged to have been heretofore or hereafter taken or omitted by him as such director or officer, and shall reimburse each such person for all legal and other expenses (including the cost of settlement) reasonably incurred by him in connection with any such claim, liability, suit, action or proceeding; provided, however, that no such person shall be indemnified against, or be reimbursed for, any claims, liabilities, costs or expenses incurred in connection with any claim or liability, or threat or prospect thereof, based upon or arising out of his own willful misconduct in the performance of his duties as such director or officer. The determination hereunder and the reasonableness of such costs and expenses may be made, and shall be final and conclusive if made, by the

© SEFA - 5th Edition Desk Reference - Version 3.0

Board of Directors of the Association acting at a meeting at which a quorum is present. All such rights accruing to any person under the provisions of this paragraph shall not exclude any other right to which he may be lawfully entitled, nor shall anything herein contained restrict the right of the Association to indemnify or reimburse such person in any case even though not specifically herein provided for.

Article 12. Rules and Regulations

The Board of Directors may adopt or amend rules and regulations to carry these By-Laws into effect and to provide for the executive management of the Association, provided that the same shall not be inconsistent with the provisions and requirements of these By-Laws.

Article 13. Amendments

These By-Laws may be amended at any properly held meeting of the members of the Association by a vote of three-fourths of the executive members present and voting, provided that in case of a special meeting due notice of the purport of the proposed amendment shall be contained in the notice of the meeting or any adjournment thereof.

SEFA Meetings Policy Statement

SEFA meetings are gatherings of members at which the Association's business is transacted, and represent the opportunity to legitimately further the Association's goals. SEFA meetings are carefully structured and monitored. An agenda is prepared and circulated in advance and is carefully followed at the meeting. A SEFA staff member or legal counsel attends all meetings. There are no informal meetings of the Association or of any of its committees; discussion of SEFA matters must never occur outside of formal meetings.

There should never be a discussion of any of the following at a SEFA meeting:

1. Price or any elements of price or pricing policies, including costs.
2. Discounts, terms and conditions of sale, warranty terms, profits, market shares, sales territories, and rejection or termination of customers.
3. Identification of individual company statistics, inventories or merchandising methods.
4. Particular competitors.
5. Anything dealing with trade abuses or excluding or controlling competition.

By following these guidelines the members can meet to transact lawful Association business for the betterment of our industries.

SEFA-Approved Product Testing Facilities

A company that would like to have its product tested "compliant" to SEFA's Recommended Practices should contact one of the following SEFA-approved Independent Third Party Test Labs. These facilities are not SEFA Members but rather "SEFA approved" independent third-party labs which have demonstrated the necessary competence to perform testing to SEFA's Recommended Practices.

For the most up-to-date list of approved Test Facilities visit us at sefalabs.com.

3Flow—Contact: Tom Smith
231-C East Johnson Street
Cary, NC 27513
Tel: (919) 319-4290
3flow.com

Absolute Testing—
Contact: Steve McCauley
906 Lochmoore Drive
Waunakee, WI 53597
Tel: (608) 444-2485
website under construction

Air Safe—
Contact: Michael Alleman
129 S Gallatin Street
Liberty, MO 64068
Tel: (888) 924-7723
airsafeonline.com

Cardinal Environmental —
Contact: Scott Hanson
3303 Paine Avenue
Sheboygan, WI 53081
Tel: (920) 459-2500
cardinalenvironmental.com

CATAS —
Contact: Andrea Giavon
Via Antica 24/3
San Giovanni al Natisone I- 33048
Italy
Tel: (+39) 0432 747211
www.catas.com

Gaynes Labs, Inc. —
Contact: Phillip Ross
9708 Industrial Drive
Bridgeview, IL 60455
Tel: (708) 233-6655
www.gaynestesting.com

IMR Test Labs—
Contact: Donald Shuman
131 Woodsedge Drive
Lansing, NY 14882
Tel: (607) 533-7000
www.imrtest.com

Integrity Testing Laboratories —
Contact: Ed Leach
3959 SW 12 Court
Fort Lauderdale, FL 33312
Tel: (714) 321.0191
www.integritytesting.com

Intertek - Hong Kong, Ltd. —
Contact: Alan Hui
10/F Garment Ctr 576 Castle Peak Rd
Lai Chi Kok, Kowloon, Hong Kong
Tel: 852 2173 8618
intertek-etlsemko.com

Intertek India Pvt., Ltd. —
Contact: A. Mishra - Narayan Manna
290 Udyog Vihar, Pase - II
Gurgaon, Haryana 122 016 INDIA
Tel: +91 124 4503411 Ext. 3508
intertek-etlsemko.com

Intertek - U.S. Offices —
Contact: Brian Kneibel
4700 Broadmoor SE, Suite 200
Grand Rapids, MI 49512
Tel: (616) 656-1166
www.intertek-etlsemko.com

Intertek - U.S. Offices —
Contact: Todd Burroughs
130 Derry Court
York, PA 17406
Tel: (717) 767-3796
www.intertek.com/building

Invent UK, Ltd.,—
Contact: Dr. A. F. Bicen
85 Southdown Road
Harpenden Al5 1PR UK
Tel: +44 (0) 1582-461666
www.invent-uk.com

Micom Laboratories, Inc.—
Contact: Michel Comtois
556 rue Lepine,
Quebec, Canada H9P 2V6
Tel: (514) 633-0078
www.micomlab.com

SGS -CSTC Co., Ltd. Anji Branch—
Contact: David Fan
No. 301 Sunlight Road, 2 Block
Sunlight Industry Zone, Anji County
Zhejiang Province, China 313300
Tel: 86 (0) 572-501885
www.cn.sgs.com

SGS Testing Co.-Shanghai—
Contact: Donna Gu
1/F 3rd Bldg, No. 889, Yishan Road,
Xuhui District, Shanghai 200233
Tel: 86(0)21 61402666 ext 2068
www.cn.sgs.com

TÜV SÜD Asia PSB Pte., Ltd—
Contact: Dr. Sihai Ll
1 Science Park Drive
Singapore 118221
Tel: +65 6885 1335
www.tuv-sud-psb.sg

UL— Contact: Joseph La Grow
3480 Windquest Drive,
Holland, MI 49424
Tel: (616) 217-1323
www.ul.com

© SEFA - 5th Edition Desk Reference - Version 3.0

Scientific Equipment & Furniture Association

SEFA Code of Ethics and Code of Ethics Rules and Procedures

SEFA World Headquarters
65 Hilton Avenue
Garden City, NY 11530

Tel: 516-294-5424
www.sefalabs.com

SEFA SPELLS SAFE

SEFA CODE OF ETHICS

(As Amended February 12, 2013)

SEFA members shall distinguish themselves by always engaging in honest, ethical and professional business practices. Membership shall be used as a means of professional development. Unfair, misleading, unethical or deceptive business practices are unacceptable and violate the Code of Ethics.

SEFA Code of Ethics :

1. SEFA members shall have, as their primary goal, developing and producing safe and functional laboratory furniture and equipment.

2. SEFA members shall yearly, in writing, acknowledge that they endorse the quality and performance levels stated in the recommended practices and that they will adhere to the Code of Ethics and be bound by the Rules and Procedures governing Code of Ethics Complaints.

3. SEFA members shall maintain objective, professional and ethical judgment. They shall not compromise that judgment by undertaking any activity, accepting any contribution or having any conflict of interest that would prevent acting in the best interest of their employers or clients.

4. SEFA members shall use their membership as a means of professional development.

5. SEFA members shall not intentionally engage in any unfair, misleading or deceptive trade practices under New York or United States Federal law.

6. SEFA members shall practice in a manner that supports the rights of employers, employees and clients, and shall not discriminate in any way.

7. Violation of the Code of Ethics may result in termination of membership or such other sanction as deemed appropriate by SEFA's Board of Directors and consistent with the Code of Ethics Rules and Procedures.

8. Applicants for SEFA membership must adhere to SEFA's Code of Ethics, as a condition of their application. Previous Code of Ethics violations by an applicant may disqualify the applicant from becoming a SEFA member.

Code of Ethics Rules and Procedures

(Revised as of November 7, 2014)

As a condition of SEFA membership, all members shall follow these rules and procedures:

Article I
COMPLAINT AND ANSWER

§ 1.1 A SEFA member in good standing or the Code of Ethics Committee may file a written confidential complaint alleging a Code of Ethics violation by a SEFA member. The Company bringing the complaint must be a Member of SEFA for at least 18 consecutive months immediately preceding the filing of the complaint and must maintain its status as an active member in good standing during the period the complaint is pending.

§ 1.2 A filing fee is not required if the complaint is filed by the Code of Ethics Committee.

§ 1.3 Each complaint shall be accompanied by a non-refundable $850.00 filing fee.

§ 1.4 Robert's Rules of Order shall be followed in connection with all discussions and deliberations concerning Code of Ethics complaints.

§ 1.5 All Board members are required to participate in deliberations and vote on a complaint, unless they are either the complainant, the respondent or have some other conflict of interest.

§ 1.6 For purposes of these Rules and Procedures, the term "days" refers to "calendar days".

§ 1.7 In all preliminary decisions made by the Board concerning a potential Code of Ethics violation, the Board shall vote on such matters and a simple majority of those voting shall be required for these determinations.

§ 1.8 A two-third's majority of the Board voting shall be required to find a Code of Ethics violation and the corresponding sanction.

§ 1.9 The alleged Code of Ethics violation must involve business activities which establish qualification for membership in SEFA, as set forth in §3.2 of SEFA's By-Laws, and must have been committed within two (2) years of the complaint being filed. In the event a legal, administrative or arbitration proceeding is commenced and involves the same issues, then all proceedings under these Rules will be stayed pending final determination in the other forum.

§ 1.10 The complaint shall be filed with the Executive Director.

§ 1.11 Within fifteen (15) days of receipt of a Code of Ethics complaint, the Executive Director will communicate with the member or Code of Ethics Committee to obtain any additional information deemed relevant. This member or the Committee will provide this additional information within (15) days of receipt of the request.

© SEFA - 5th Edition Desk Reference - Version 3.0

§ 1.12 Upon receipt of all information provided by the complainant the Executive Director shall, within five (5) days, submit the confidential Code of Ethics complaint to SEFA's Board of Directors. The complaint shall remain confidential.

§ 1.13 Within thirty (30) days of the Board's receipt of a complaint, the Board shall convene either in person or telephonically, to review the complaint.

§ 1.14 If the Board determines that it requires additional information from the complainant, it shall submit that information in writing within fifteen (15) days after receipt of such request. Alternatively, The Board may determine that it requires a confidential interview with the complainant as well as additional information.

§ 1.15 Within thirty (30) days after receipt of all information from the complainant and/or completion of an interview of complainant, the Board shall determine if there is probable cause to believe a violation has occurred. Probable cause is defined as a reasonable belief that a member has violated SEFA's Code of Ethics.

§ 1.16 A Board determination of no probable cause is final and may not be appealed.

§ 1.17 If the Board determines that there is probable cause to believe that a Code of Ethics violation has occurred then the Executive Director shall contact the member who is the subject of the complaint, so that said member has an opportunity to submit a response to the Code of Ethics complaint.

§ 1.18 The member who has been accused of a Code of Ethics violation shall submit an initial response to the complaint to the Executive Director within thirty (30) days of receipt of the Board's probable cause determination.

§ 1.19 In the event the member fails to respond to the complaint, the Code of Ethics complaint will be deemed admitted and the Board shall, within thirty (30) days of said default, determine the appropriate sanction set forth in Article III below.

§ 1.20 Within fifteen (15) days of receipt of the response, the Executive Director shall request any additional information deemed necessary. The member shall provide said additional information to the Executive Director within fifteen (15) days of said request or such time as deemed appropriate by the Executive Director.

§ 1.21 Upon receipt of the full response or the expiration of the time permitted for such response, whichever shall occur first, the Executive Director shall promptly submit the member's response to SEFA's Board of Directors.

§ 1.22 The Board shall reconvene, either in person or telephonically, within thirty (30) days after the time permitted to submit all responses.

Article II
CODE OF ETHICS DETERMINATION

§ 2.1 The Board may determine that it requires additional information from either party to make a determination. In such case, the party shall submit the additional information within fifteen (15) days after receipt of such request. The Board may also require an interview of the parties.

§ 2.2 In the event that the Code of Ethics violation involves a member of SEFA's Board of Directors, said Board Member shall not participate, in any manner, in the determination of the Code of Ethics violation.

§ 2.3 Within thirty (30) days after receipt of all information, the Board of Directors shall determine if there exists clear and convincing proof that a member has engaged in a Code of Ethics violation and the appropriate sanction. Clear and convincing proof is defined as information which makes it highly probable that a Code of Ethics violation has occurred.

§ 2.4 All votes taken by the Board of Directors shall reflect only the number of votes cast. An abstention is not considered a vote for purposes of determining a simple majority or two-thirds (2/3) majority under §1.7 or §1.8 above.

Article III
SANCTIONS

§ 3.1 In the event that the Board of Directors determines that a Code of Ethics violation has occurred, the Board shall also determine the appropriate sanction for said violation. Those sanctions shall include an award of $850.00 to the member who filed the complaint and one of the following other sanctions:

a) The issuance of a private reprimand to the member;

b) The issuance of a public reprimand, which would involve a communication to the entire SEFA membership and a website posting that would be accessible to anyone visiting the SEFA website;

c) The member shall be placed on probation for a period not to exceed one (1) year, with appropriate conditions for such probation.

d) A suspension of SEFA membership for a period of time not to exceed five (5) years; or

e) Termination of SEFA membership.

§ 3.2 The severity of the sanction shall be based upon, among other factors, the following:

a) The damage caused by the violation or the benefit accruing to the member;

b) The length of time and/or number of times such violation(s) occurred;

c) Any prior warnings by anyone that such conduct was considered a violation of SEFA's Code of Ethics or was otherwise unlawful;

d) The prompt acknowledgement of the violation by the member and a corresponding promise not to engage in such conduct in the future; and

e) Any other circumstances deemed relevant by the Board of Directors.

© SEFA - 5th Edition Desk Reference - Version 3.0

§ 3.3 Within seven (7) days of the Board making its determination, the Executive Director shall convey in writing said determination to the parties involved.

§ 3.4 The sanction shall take effect thirty (30) days after the member receives notice of the sanction.

§ 3.5 To the fullest extent allowed by law, the Board shall be fully indemnified, defended and held harmless by the complainant, respondent and SEFA in connection with the Board's decisions and activities involving the complaint.

Article IV
APPEAL

§ 4.1 In the event that respondent disputes the determination of the Board of Directors that a Code of Ethics violation occurred, said SEFA member shall have the right to appeal the Board's decision to the International Center for Dispute Resolution ("ICDR") of the American Arbitration Association ("AAA") located in New York, New York. Only the complainant and the respondent shall be parties to said AAA proceeding.

§ 4.2 The respondent forfeits it's right to appeal if the complaint was deemed admitted by the member for failure to submit a response as required under these rules and procedures and shall have no recourse whatsoever to the AAA, any court of law, SEFA's Board of Directors or any other SEFA committee or member.

§ 4.3 The Appeal to the AAA must be filed and all fees paid by the Company taking the appeal, in accordance with the rules of the AAA. The appeal must be filed within thirty (30) days after the SEFA member receives the Board's determination that a Code of Ethics violation has occurred. The sanction imposed shall then automatically be stayed for one-hundred and twenty (120) days after the timely filing of the appeal.

§ 4.4 The appeal of such determination that a Code of Ethics violation was established by clear and convincing evidence, shall follow the rules of the American Arbitration Association and shall be determined by a panel of three (3) arbitrators, who shall make a decision within one hundred and twenty (120) days after the appeal is filed as to whether the Board of Director's determination was supported by clear and convincing proof. The sanction imposed by the Board is not appealable and shall not be the subject of any determination in the arbitration proceeding. Notwithstanding the rules of the AAA the respondent in the SEFA Code of Ethics proceeding shall be responsible to pay all fees, costs and expenses of the arbitrators.

§ 4.5 The arbitrators are not authorized to make any other determinations other than to determine if the Board's decision was supported by clear and convincing evidence.

§ 4.6 Notwithstanding §4.5, the arbitrators may award costs and reasonable legal fees to the complainant in the SEFA Code of Ethics proceeding in the event the Code of Ethics determination is upheld or affirmed by a majority of the arbitrators.

SEFA CODE OF ETHICS ADVISORY OPINION 2011-1

Adopted by SEFA's Board of Directors - April 26, 2011

Question:

Can a SEFA Executive Member be found to have violated SEFA's Code of Ethics when the conduct in question was performed by the Member's dealer or installer?

Opinion:

The conduct of SEFA Members is governed by SEFA's Code of Ethics as adopted in September 2010. In many instances, the SEFA Member may not be directly involved in the delivery and installation of the laboratory furniture and related equipment. Typically, this work is performed by companies or individuals designated by SEFA Members to act as dealers or installers. The Members may become aware that dealers and installers have engaged in conduct that might be considered a violation of SEFA's Code of Ethics.

It is the opinion of the Board of Directors that under certain circumstances, a SEFA Member may be held accountable for ethical violations of its dealers and/or installers. Factors to be considered in making this finding include, but are not limited to, the participation of a SEFA Member in the unethical conduct; the extent of the SEFA Member's knowledge of the unethical conduct engaged in by its dealer or installer; and whether the SEFA Member was advised by third parties (architects, lab planners, end-users, etc.) that they believed conduct may occur which could be deemed a violation of SEFA's Code of Ethics.

In conclusion, the issue of whether a SEFA Member can be held accountable for the acts of its dealers or installers will have to be determined on a case-by-case basis after an analysis of all relevant factors.

© SEFA - 5th Edition Desk Reference - Version 3.0

Scientific Equipment and Furniture Association
65 Hilton Avenue · Garden City, NY 11530
Telephone 516-294-5424 · E-mail: info@sefalabs.com
Website: www.sefalabs.com

Code of Ethics Confidential Complaint Form

STATE OF _____)

COUNTY/PROVINCE OF _____ : SS.:

COUNTRY OF _____)

_____, being duly sworn deposes and says:

I am a SEFA Member in Good Standing or the chairman of SEFA's Code of Ethics Committee.

As such, I am eligible to make this complaint. I am the _____ of
Title

_____, hereinafter called the "complainant." I make this
(Name of Company)

Code of Ethics complaint against _____,
(Name of Company)

hereinafter called the "respondent." The incident/occurrence took place on

_____.
Date

Statement of alleged Code of Ethics violation:_____

_____

_____

_____

_____
Signature

Sworn to before me this
Day of , 20__

_____
Notary Public`

(Rev.4/2014)

Scientific Equipment and Furniture Association
65 Hilton Avenue · Garden City, NY 11530
Tel: 516-294-5424 · E-mail : info@sefalabs.com
Website: www.sefalabs.com

Annual Certification

Company Name _____

Mailing Address _____

City_____ **State/Province**_____ **Country**_____ **Postal Code**_____

Physical Location Address_____
(Fill in if different than mailing address)

Phone_____ **Fax** _____ **Email** _____

URL: www:_____ **Year Founded**_____ **Products Country of Origin** _____

PRIMARY CONTACT:

Name:_____

Phone:_____ **Fax**_____ **Email**_____

ADDITIONAL CONTACTS:

2) Name:_____

Phone:_____ **Fax**_____ **Email**_____

3) Name:_____

Phone:_____ **Fax**_____ **Email**_____

4) Name:_____

Phone:_____ **Fax**_____ **Email**_____

I certify that my company meets all the criteria for membership as set forth in the By-Laws of the Association. We agree to be bound by the most current version of SEFA's Code of Ethics and the Rules and Procedures for the Enforcement of the Code of Ethics including the arbitration appeal process contained therein.

I further certify that the above is correct and that my company qualifies for membership under the current SEFA By-Laws. I acknowledge the "SEFA Recommended Practices" and agree to use the SEFA mark and related materials in accordance with the Association's guidelines and to discontinue its use if no longer a current member in good standing. I acknowledge that misrepresentation of the above information is a basis for termination.

_____
Signature Title

_____
Printed Name Date

(12/2014)

© SEFA - 5th Edition Desk Reference - Version 3.0

Scientific Equipment & Furniture Association
Recommended Practices

SEFA 1-2010
Laboratory Fume Hoods

SEFA World Headquarters
65 Hilton Avenue
Garden City, NY 11530

Tel: 516-294-5424
www.sefalabs.com

SEFA SPELLS SAFE

Table of Contents

	Page
Committee Members	**51**
Foreword	**52**
1.0 Purpose	**53**
2.0 Scope	**53**
3.0 Laboratory Fume Hood Defined	**53**
3.1 Family of Ventilated Laboratory Safety Devices	
3.2 ASHRAE-110 Protocol	
4.0 Laboratory Fume Hood As Manufactured	**56**
4.1 Components of Laboratory Fume Hoods	
4.1.1 Hood Exterior	
4.1.2 Hood Interior	
4.1.3 Hood Baffle	
4.1.4 Hood Exhaust Collar	
4.1.5 Hood Bypass	
4.1.6 Hood Sash	
4.1.7 Hood Work Surface	
4.1.8 Hood Lights	
4.1.9 Hood Services	
4.1.10 Hood Monitor	
4.2 Types of Laboratory Fume Hoods	
4.2.1 Bench-Top Fume Hood	
4.2.2 Radioisotope Fume Hood	
4.2.3 Perchloric Acid Fume Hood	
4.2.4 Distillation Fume Hood	
4.2.5 Floor Mounted Fume Hood (Walk-in Fume Hood)	
4.2.6 Auxiliary Air Fume Hood	
4.3 Energy Efficient Fume Hood	
4.4 Testing of Laboratory Fume Hoods-As Manufactured	
4.4.1 Face Velocity	
4.4.2 Containment Testing - As Manufactured	
4.4.3 Static Pressure - Bench Mounted Fume Hood	
5.0 Laboratory Fume Hood - As Installed	**65**
5.1 Location in Laboratory	
5.2 Safety Considerations	
5.3 Fume Hood Evaluation in the Field - As Installed	
5.3.1 Room Conditions	
5.3.2 Sash Operations	
5.3.3 Evaluation of Low Airflow Monitor	
5.3.4 Face Velocity	
5.3.5 Containment Testing - As Installed	
5.4 Trouble Shooting	
5.4.1 Insufficient Airflow	
5.4.2 Room Cross Drafts	
5.4.3 Exhaust Unit and Duct Considerations	
5.4.4 Make-up Air	
5.4.5 Laboratory Fume Hood Inspection and Maintenance	
5.5 Maintenance	
6.0 Laboratory Fume Hoods - As Used	**69**
6.1 Safe Work Practices	
6.2 Plan For Conducting Experiments	
6.3 Wear Appropriate Personal Protection	
6.4 Fume Hood Evaluation - As Used	
6.5 Utilize Proper Work Practices	
6.5.1 Proper Location of Equipment and Apparatus	
6.5.2 Desired Operator Position and Movements	

Page

6.5.3 Proper Configuration of Vertical and Horizontal Sliding Sashes
6.5.4 Reduce Pedestrian Traffic Near the Hood
6.5.5 Ensure Hoods Are Cleaned and Decontaminated
6.5.6 Do Not Store Materials in the Hood
6.5.7 Summary of Proper Work Practices

6.6 Responsibilities for Ensuring Proper Hood Performance
6.6.1 Management
6.6.2 Principal Research Investigators
6.6.3 Health and Safety
6.6.4 Laboratory Design Team and Engineering
6.6.5 Construction Team
6.6.6 Controls Manufacturer
6.6.7 Building System Commissioning
6.6.8 Operation and Maintenance
6.6.9 Laboratory Personnel and Hood Users
6.6.10 Hood Manufacturers

7.0 Laboratory Ventilation Systems 77

7.1 Airflow Control Strategy
7.1.1 Constant Volume (CV)
7.1.2 Two-State Control
7.1.3 Variable Air Volume (VAV) System
7.1.4 Summary of Air Control Strategies

7.2 Room Pressurization

7.3 Diversity

8.0 Other Ventilated Laboratory Safety Devices 79

8.1 Special Purpose Hoods
8.1.1 Demonstration Hood
8.1.2 California Hood
8.1.3 Ventilated Hoods and Enclosures

Page

8.1.3.1 Oversized Hood
8.1.3.2 Table Top Hood
8.1.3.3 Conventional Hood
8.1.3.4 Balance Enclosure
8.1.3.5 Microscope Enclosure
8.1.3.6 Robotic Enclosure
8.1.3.7 Histopathological Enclosures

8.2 Local Exhaust Ventilation
8.2.1 Canopy Hood
8.2.2 Slot Hood
8.2.3 Snorkel
8.3 Exhausted Laminar Flow Hoods

8.3 Exhausted Laminar Flow Hoods

8.4 Biological Safety Cabinets
8.4.1 Class I Cabinets
8.4.2 Class II Cabinets
8.4.3 Class III Cabinets

8.5 Ductless Hoods

9.0 Terms and Definitions 87

10.0 Basic Calculations 92

11.0 Relevant Organizations 92

12.0 Regulatory and Industry Consensus Standards 95

12.1 (ACGIH) American Conference of Government Industrial Hygienists
12.2 ANSI/AIHA Z9.5-1992
12.3 ANSI/ASHRAE 110-1995
12.4 ASHRAE Handbook Applications 1999
12.5 NFPA 45, 2000
12.6 OSHA 1910.1450
12.7 Prudent Practices
12.8 Handbook of Laboratory Safety

Appendix -

Selection and Management of Exposure Control Devices 101

© SEFA - 5th Edition Desk Reference - Version 3.0

SEFA 1 - Committee Members

Co-Chairs

Andrew Sinnamon, Mott Manufacturing
Javier Arguedas, Waldner Laboreinrichtungen, GmbH

3 Flow

Air Control, Inc.

Air Master Systems

Bedcolab

BSA Life Structures

Cannon Design

Dalton

Flad Architects

Flow Sciences

HEMCO Corporation

Institutional Casework

Inter Dyne Systems, Inc.

J Talka Consulting, LLC

Kewaunee Scientific Corporation

Labconco Corporation

Lab Crafters

LM Air Technologies

Sheldon Laboratory Systems, Inc.

TFI Inline Design Corporation

T H Chang Consulting

Ultra Labs, LLC.

Yamato Scientific

Foreword

SEFA Profile

The Scientific Equipment and Furniture Association (SEFA) is an international trade association comprised of manufacturers of laboratory furniture, casework, fume hoods and members of the design and installation professions. The Association was founded to promote this rapidly expanding industry and improve the quality, safety and timely completion of laboratory facilities in accordance with customer requirements.

Selecton and Management Guide to Exposure Control Devices

In 2018 SEFA published the *Selection and Management of Exposure Control Devices in Laboratories*. This is a comprehensive guide for all types of exposure control Devices (ECD's) and is designed to assist end-users, specifiers, lab planners and architects in determining the most appropriate ECD's for particular lab environments. This guide is published as an appendix to SEFA 1.

SEFA Recommended Practices

SEFA and its committees are active in the development and promotion of Recommended Practices having domestic and international applications. Recommended Practices are developed by the association taking into account the work of other standard writing organizations. Liason is also maintained with government agencies in the development of the specifications.

SEFA's Recommended Practices are developed in and for the public interest. These practices are designed to promote a better understanding between designers, architects, manufacturers, purchasers, and end-users and to assist the purchaser in selecting and specifying the proper product to meet the user's particular needs. SEFA's Recommended Practices are periodically updated.

The Recommended Practices are numbered to include an annual suffix which reflects the year that they were updated. SEFA encourages architects to specify these Recommended Practices as follows: "SEFA 1-2020."

Glossary of Terms

SEFA has developed a Glossary of Terms (SEFA 4-2020) for the purpose of promoting a greater understanding between designers, architects, manufacturers, purchasers and end users.
The terms defined by SEFA are frequently used in contracts and other documents, which attempt to define the products to be furnished or the work involved. The Association has approved this Glossary in an effort to provide uniformity among those who use these terms. Where a specific Recommended Practice contains definitions which differ from those in the Glossary of Terms, then the definitions in the specific Recommended Practice should be used.

SEFA encourages all interested parties to submit additional terms or to suggest any changes to those terms already defined by the Association. The definitions should be used to help resolve any disputes that may arise or to incorporate the applicable terms in any contract or related documents.

SEFA Disclaimer

SEFA uses its best effort to promulgate Recommended Practices for the benefit of the public in light of available information and accepted industry practices. SEFA does not guarantee, certify, or assure the safety or performance of any products, components, or systems tested, installed, or operated in accordance with SEFA Recommended Practices or that any tests conducted under its Recommended Practices will be non-hazardous or free from risk. SEFA encourages the use of third party independent testing.

Note : Testing as described in this document must be performed and documented by a SEFA-approved third-patty testing facility. See Page 36 of the SEFA Desk Reference 5th Edition Version 3.0 or visit us at sefalabs.com for the most current list of SEFA-approved test labs.

© SEFA - 5th Edition Desk Reference - Version 3.0

1.0 Purpose

The purpose of these Recommended Practices is to provide architects, engineers, planners, specifiers, manufacturers and end users with the Industry Standard Practices. These Recommended Practices cover the design, construction, installation, testing, maintenance and safe use of laboratory fume hoods.

2.0 Scope

These Recommended Practices provide a comprehensive single source of knowledge pertaining to laboratory fume hoods. Since the laboratory fume hood is integral to the Laboratory Ventilation System, these practices will address the entire system as it relates to the laboratory fume hood.

A Laboratory Ventilation System includes the Supply Air System; the Exhaust Air System (which includes room air exhaust in addition to the laboratory fume hood exhaust); the Laboratory; the Laboratory Fume Hood, and other ventilated enclosures.

3.0 Laboratory Fume Hood Defined

A Laboratory Fume Hood is a safety device specifically designed to carry undesirable effluents (generated within the Hood during a laboratory procedure) away from laboratory personnel and out of the building, when connected to a properly designed laboratory ventilation system. A Laboratory Fume Hood shall be made primarily from flame resistant materials including the top, three fixed sides, and a single face opening. Face opening is equipped with a sash and sometimes an additional protective shield. Face opening will have a profiled entry and usually an airfoil designed to sweep and reduce reverse airflows on the lower surface. A Laboratory Fume Hood will be equipped with a baffle and, in most cases, a bypass system designed to control airflow patterns within the hood and manage the even distribution of air at the opening. The bypass system may be partially blocked to accommodate Variable Air Volume (VAV) Systems. A Laboratory Fume Hood will be set on a bench, a pedestal or on the laboratory floor.

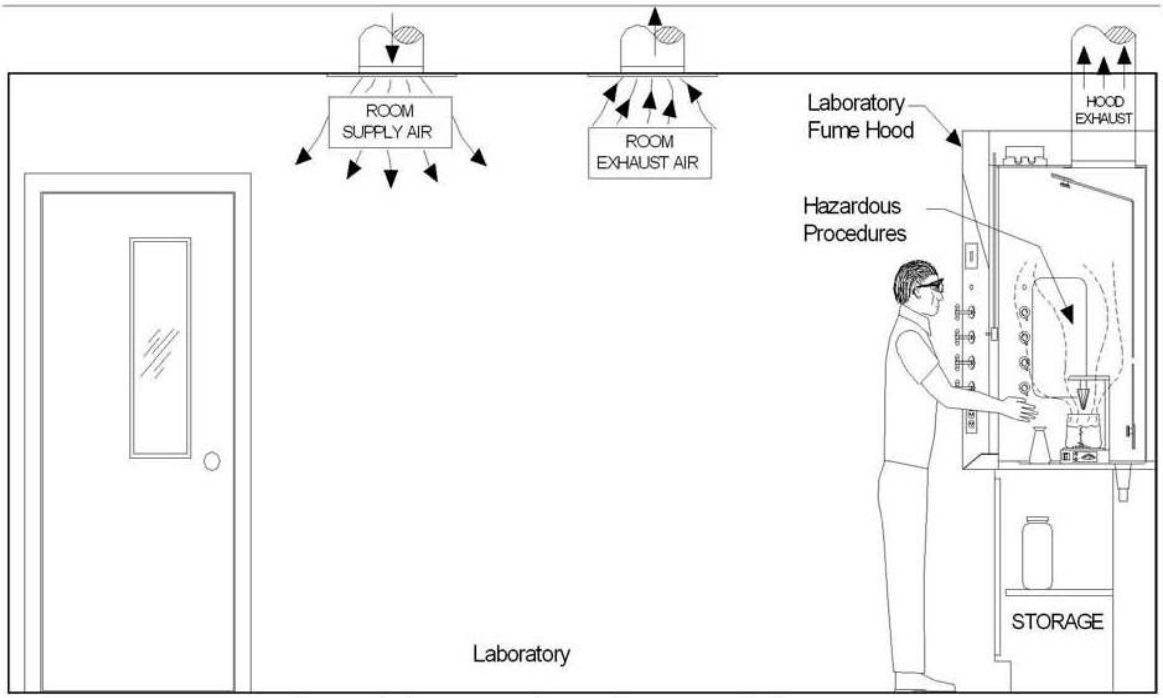

Fig. 1 Typical Constant Volume Laboratory Ventilation System

A Laboratory Fume Hood is given here as the proper terminology. Other widely used terms include --- Fume Hood, Chemical Hood, Chemical Fume Hood, Hood, and Fume Cupboard.

Laboratory fume hoods are perhaps the most widely used and misused safety devices. Fume hoods are available in many shapes, sizes, materials, and finishes. Their flexible design enables them to be configured to accommodate a variety of chemical procedures. However, the flexibility offered by different designs and operating configurations can result in varying levels of performance and operator protection. Great care must be employed by the user when using a laboratory fume hood. Consult the manufacturers' Recommended Practices for Specific Operation, Safety and Maintenance Guidelines.

3.1 Family of Ventilated Laboratory Safety Devices

The laboratory fume hood is part of the ventilated laboratory safety device family and can be sub-categorized by type. (See Figure 2)Each type is connected to a laboratory ventilation system. These "other" systems are described in Section 8.0.

3.2 ASHRAE-110 Protocol

This practice is organized to be consistent with the ASHRAE 110 protocol. "As Manufactured" issues in this practice are directed to fume hood practices that are pertinent to the hood manufacturers' location. "As Installed" identifies those that occur in a newly constructed or renovated laboratory prior to the user occupying the lab. The "As Used" section helps with issues after the installation is complete and how the hood is to be or is being used.

© SEFA - 5th Edition Desk Reference - Version 3.0

Types of Ventilated Devices

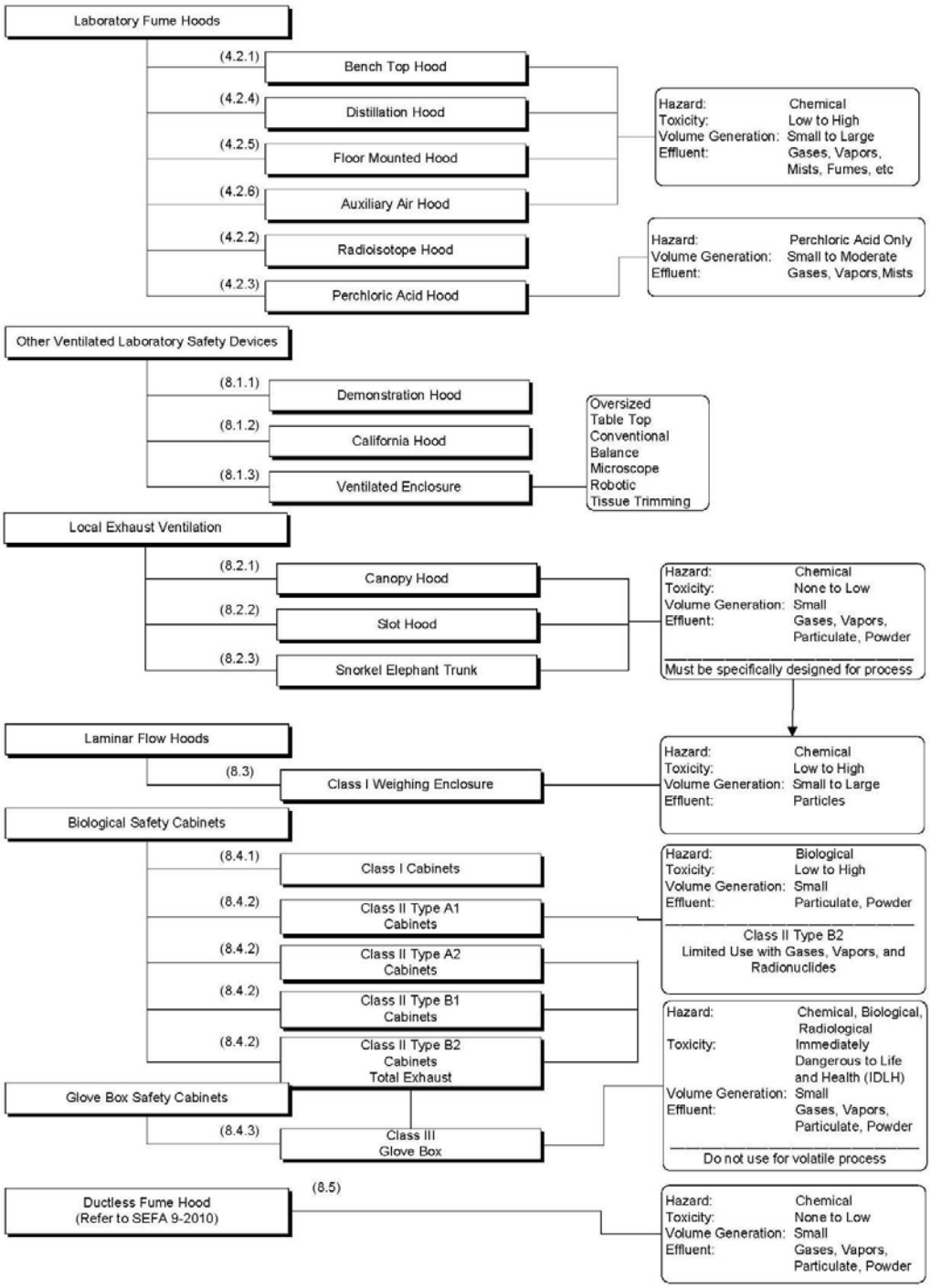

Fig. 2

4.0 Laboratory Fume Hood - As Manufactured

There are a wide variety of fume hood designs. Underwriter's Laboratories (UL) Standard 1805 outlines requirements for the structural integrity, the flame and chemical resistance, the plumbing piping and electrical wiring of the fume hood structure. SEFA recommends the fume hood be classified under UL standard 1805. They generally share a number of similar characteristics and components. The hood depicted in Figure 3 below, shows generalized components of laboratory fume hoods.

4.1 Components of Laboratory Fume Hoods

4.1.1 Hood Exterior

The hood exterior is the external "skin" and is usually made of painted steel. Some hood exteriors are made of stainless steel, polypropylene, wood, or phenolic. The exterior front of the hood is an important design element for fume containment. Properly designed laboratory fume hoods will have a contoured entry, which assists airflow into the hood and could improve hood performance.

The enclosure of the hood is designed to protect against chemical attack. However, if the exterior surfaces of your hoods exhibit corrosion or deterioration, investigate the source.

The airfoil sill is a radiused or angled air vane positioned on the leading edge of the work surface. The sill is designed to enable smooth flow over the work surface and provide a bypass opening when the sash is lowered or closed. Some flush sills employ a trough for spillage containment and slots to direct airflow over the work surface.

4.1.2 Hood Interior

Fume chamber and baffles shall be constructed of materials that are resistant to the chemical fumes, vapors and condensation particulate that may collect and deposit on the interior surface of the fume chamber and baffles. Consideration should be given to the desired color and specifications of liner materials that are resistant to the chemical exposure and corrosion resistance in the fume chamber. Typical liner materials are fiber reinforced thermoset composite – epoxy and polyester, phenolic resin, stainless steel type 304 and 316, thermoplastics – polyvinyl chloride, high density polyethylene, polypropylene and

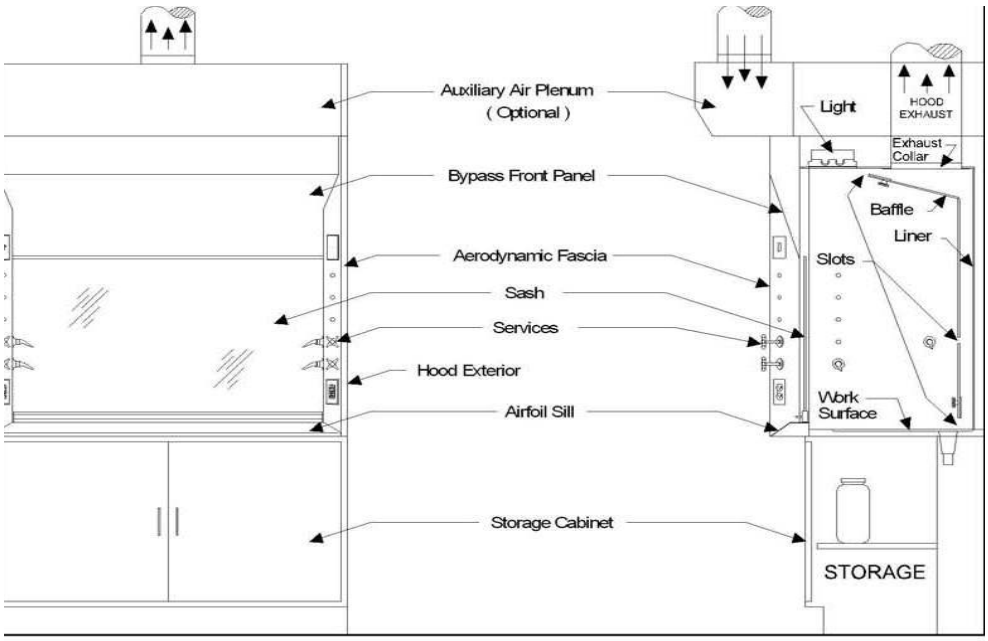

Fig. 3 Typical Components of a Bench Top Hood

© SEFA - 5th Edition Desk Reference - Version 3.0

melamine, chemical resistant mineral board, and sheet steel. Liner materials should be flame retardant, self-extinguishing and have a flame spread rating of 25 or less in accordance with ASTM-E84.

If the fume hood liner is not rated at 25 or less in accordance with ASTM-E84 or there is a high risk potential of fire hazard in the fume chamber, for safety reasons the fume hood should be equipped with automatic fire suppression and alarm system or, in some cases, local jurisdiction may require fire suppression system, wet or dry.

4.1.3 Hood Baffle

The baffle in the rear of the hood interior is designed to control airflow distribution within the hood and through the face opening. The baffle slots are sometimes adjustable. The location, size, shape and configuration of baffle slots significantly affect the performance of the laboratory fume hood. (See: Knutson, Gerhard W. "Effect of Slot Position on Laboratory Fume Hood Performance", Heating/Piping/Air conditioning Feb. 1984: 93-96).

4.1.4 Hood Exhaust Collar

The exhaust collar that connects the hood to the exhaust duct is located behind the baffle at the top of the interior liner. The collar should be made of a corrosion resistant material, or a material appropriate for the fume hood application. The design of the exhaust collar can affect the hood static pressure drop and noise level, e.g. "bell-mouth" duct collars can reduce the turbulence associated with the airflow transition from the hood chamber to the exhaust system ductwork.

The number of exhaust collars varies depending on the length of the hood. Typically hoods longer than six feet have more than one exhaust collar for connection to the exhaust ducts.

4.1.5 Hood Bypass

Open Bypass: On hoods equipped with a vertical rising sash, an open bypass is used to divert air from the face opening when the sash is lowered. Diverting air through the bypass redirects the volume of air entering the face of the hood and, thus, limits variation to the face velocity. Bypasses are generally designed to limit the increase in face velocity. The velocity, when measured at the sash opened six inches, shall be no more than three times the velocity at the sash fully opened. Limiting the increase in face velocity is important as excessive face velocity can cause significant turbulence within the hood and interfere with experiments and apparatus in the hood. This helps maintain a constant exhaust volume.

Restricted Bypass: The restricted bypass serves the same function as the open bypass, but the bypass is smaller. This is done to reduce the amount of air required by the laboratory fume hood in the operating mode for VAV systems, horizontal, and combination sashes. Eliminating the bypass completely is not recommended due to the potential risk of contaminate leakage.

Minimum exhaust volume is recommended at 25cfm per square foot of work surface. (See: latest edition of NFPA 45 Standard on Fire Protection for Laboratories Using Chemicals.)

4.1.6 Hood Sash

The sash is a moveable panel(s), most typically transparent, provided on fume hoods to restrict the opening and provide a protective barrier between the operator and the experiment. Sashes are available in a variety of configurations that enable vertical and/or horizontal movement of sash panels. Regardless of configuration, the sash shall be designed to move freely and not bind. Force to open the sash shall be reasonable for the size and weight of the sash.

Typically a five foot hood with a vertical rising sash shall require approximately five pounds of force to operate the sash. An additional one pound of force may be required for each additional linear foot of fume hood width.

Sashes are typically designed so that closing the sash does not restrict the area beneath the airfoil sill. This leaves the area beneath the airfoil open when the sash is fully closed.

Sash height limiting devices (also known as sash stops) are sometimes provided to limit the vertical opening of the sash. Sash stops are used to provide a safe operating condition based upon having limited available fume hood exhaust air volume. The opening at which the sash stop limits the sash opening is called the "operating sash opening" or the "design sash opening". If the sash stop is defeatable, the sash can be opened to the "maximum sash opening" or the "load sash position". ASHRAE 110 testing should be performed at both, the design opening and the maximum opening. If fume containment is unacceptable when the sash stop is bypassed, a warning label should be mounted on the fume hood clearly identifying the operating sash height and the potential dangers on bypassing the sash stop.

Sash types are generally referred to as vertical, horizontal or combination depending on the allowable movement of the sash panels. (See: Figure 4).

Vertical Sash: A vertical sash has one or more panels that can slide up and down to a height required by the operator. The sash controls the opening area and it is generally advisable to lower the sash below the breathing zone of the operator during generation of hazardous contaminants. Hoods may be equipped with sash stops to restrict the opening height of the sash. Vertical sashes may also be designed split into multiple vertical rising sashes.

Horizontal Sash: A horizontal sash has typically two or more panels that slide horizontally across the hood opening. The sash panels slide in tracks located at the top and bottom of the face opening. Horizontal sashes are used to restrict the maximum opening area of the face, but allow access to the top interior of the hood enclosure.

Combination Sash: A combination sash has horizontal sliding sash panels positioned in a vertically sliding sash frame. The combination sash provides the convenience of both vertical sash operation and horizontal sash operation.

Horizontal and combination sash panels should be used as a barrier from hazards within the hood. The sash panel should be placed between the operator and the hazard whenever feasible.

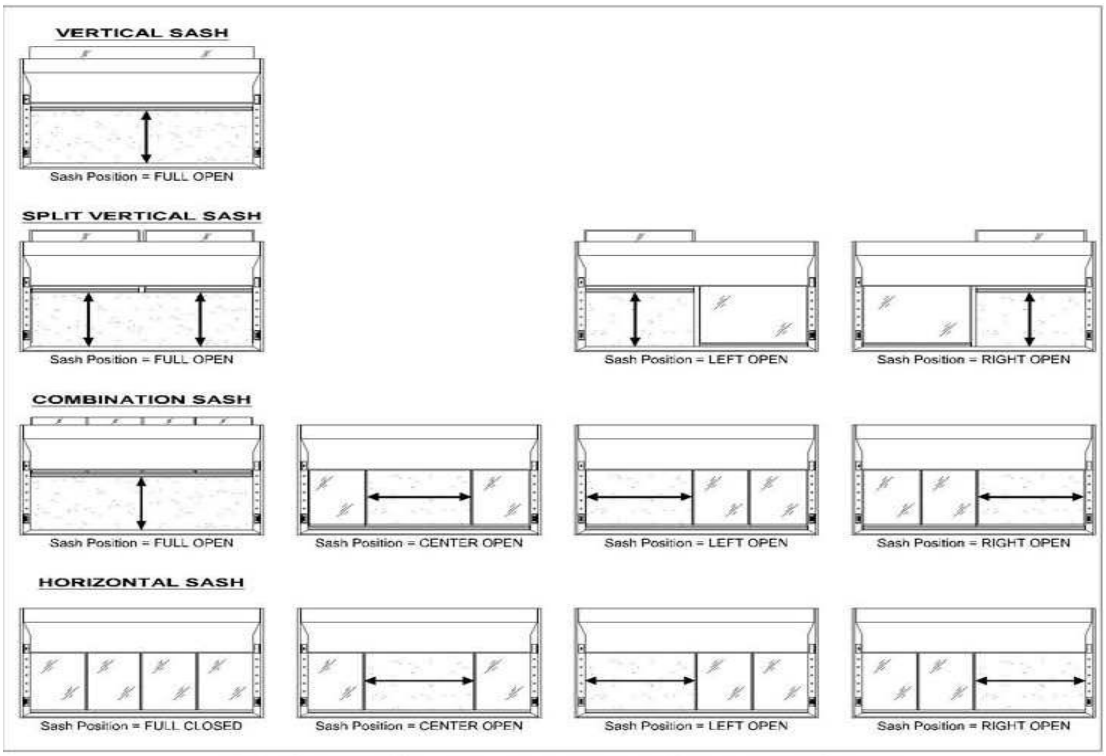

Fig. 4 Typical Sash Configuration for Different Sash Types

© SEFA - 5th Edition Desk Reference - Version 3.0

Telescoping Sash – Two or more vertically moving sash elements whose movements are linked.

4.1.7 Hood Work Surface

Work surfaces are typically made of a material that provides good heat and corrosion resistance and is easily cleaned and decontaminated. The work surface should have a recessed area. The dished or recessed area is designed to provide containment of small spills and provide demarcation of the recommended work area inside the hood. Refer to SEFA 3 – Recommended Practices for Work Surfaces.

4.1.8 Hood Lights

Most fume hoods are equipped with some type of light. Lights come in a variety of designs depending on the anticipated use of the hood. Most lights are fluorescent tubes housed outside the hood chamber and separated by a vapor resistant safety glass panel in the top of the hood. Access to re-lamping these types of lights should be from the hood exterior. The light shall be designed to provide a minimum of 80 foot candles on any part of the bench level (36" from the floor) work surface. Incandescent vapor proof lights as well as incandescent and fluorescent explosion proof lights are optional and available as specified. Many manufacturers offer electronic ballasts and energy efficient T8 or T5 bulbs.

4.1.9 Hood Services

Many hood manufacturers can equip hoods with a variety of amenities or services. The more popular services include electrical outlets, sinks, fixtures and plumbing for gas, vacuum, and air. For increased safety, controls for these services should always be accessible from outside the hood opening.

Service Fixtures: All service fixtures shall be installed so that service supply lines can be connected or disconnected, either by design of the piping assembly or through an access panel in the hood interior or exterior. All service valves shall be accessible for maintenance. All service fixture controls (e.g., gas, air, water, vacuum) should be external to the hood interior, clearly identified and within easy reach. All internal service fixture outlets shall be corrosion resistant to the application. (See SEFA 7—Recommended Practices for Laboratory Fixtures.)

Connections for services will vary, depending on the point of origin and number of fixtures. Service lines may be brought in from below, down from the ceiling, or from the back wall.

Typical piping requirements are as follows:

- Water – copper.

- Gas – wrought iron or steel (galvanized or black) or yellow brass (containing not more

than 75% copper). (See: Uniform Building Code, 2000 Edition, International Association of Plumbing and Mechanical Officials, 20001 Walnut Drive, South Walnut, CA 91789 www.iapmo.org).

- Air – copper – black iron can be used as an alternate.

- Vacuum – copper – black iron can be used as an alternate.

- Specialty Gas – appropriate materials as specified.

NOTE: Check your regional or local codes for jurisdiction and material allowance. There are regional differences.

Electrical Receptacles: All electrical receptacles should be readily accessible. Provisions shall be made so that all electrical wiring will be isolated and physically separated from vapors handled within the hood interior after the fume hood is installed. The receptacle shall be installed with the ground outlet above the power slots. If electrical receptacles are within fume hood interior, they should be installed per NFPA and UL recommendations.

NOTE NFPA allows electrics inside hood. (See: NFPA 45 Standard on Fire Protection for Laboratories Using Chemicals, latest edition).

Flammable materials are used successfully in most hoods. In an extreme case, such as specifying

a laboratory fume hood for highly volatile, flammable, hazardous procedures and use (for a complete list, request NFPA - National Fire Protection Association Publication #497M), follow NEC codes. NEC divides materials into classes and groups according to the type of explosive agent that may be present. In addition, if there is a very high risk of fire, the fume hood should be equipped with a fire suppression system. Sufficient air volume must be exhausted through the hood to dilute flammable effluents below the lower explosive limit level. See NFPA 45 for more information on minimum recommended exhaust volumes. (See: NFPA 70 National Electrical Code, 2002 Edition, NFPA).

Fire Suppression Systems:

- Any fire suppression system used in a chemical fume hood should be compliant with local codes and regulations, and NFPA 17.

- Any fire suppression system should be rated for fire classes A, B, C with manual and thermal activation triggers. Other water or liquid based systems may be acceptable if appropriate testing and certification are available.

- No fire dampers of any kind should ever be installed in a chemical fume hood exhaust system.

- Flammable materials should never be stored directly below a chemical fume hood in anything but an NFPA specified, UL listed or FM approved solvent storage cabinet.

4.1.10 Hood Monitor

All hoods shall have some type of monitor for indicating face velocity or exhaust flow verification. The monitor can be a simple pressure gage connected to a Pitot tube in the exhaust duct, one of many electronic monitors, or a vaneometer. Regardless of the monitor installed, it should provide clear indication to the hood user whether exhaust flow or face velocity is within design parameters.

A ribbon taped to the bottom of the sash is not acceptable.

4.2 Types of Laboratory Fume Hoods

4.2.1 Bench-Top Fume Hoods

A bench-top fume hood is a hood that is generally placed on a bench-top or above a storage cabinet. Bench-top hoods are available in different sizes to accommodate a variety of chemical processes. The critical dimensions for a hood include length, depth and interior height;

however, hood size is generally determined by the overall width of the hood. A five foot hood includes the width of the face and the side panels and is not a measure of the opening width. Side panels range in width from two to eight inches depending on the design and hood manufacturer.

Bench-top hoods can have vertical, horizontal or combination sash types and open or restricted bypasses depending on the sash type.

Bench-top hoods can be used for a wide variety of chemical procedures. The bench-top hood is appropriate for use with small to moderate quantities of low to highly toxic materials.

Depending on the materials of construction and operating configuration, this type of hood can provide effective containment, and exhaust of gases, vapor, mists, fumes and other aerosols having low particle mass.

4.2.2 Radioisotope Fume Hood

A fume hood used for Beta and Gamma radiation shall be referred to as a radioisotope hood. A radioisotope hood has the general characteristics of a bench-top fume hood except the work surface and interior lining must be type 304 stainless steel with coved seamless welded seams for easy cleaning and decontamination. The hood design is identical to other hood types in nearly all other respects. Horizontal sash panels are not appropriate for this fume hood type.

The work surface shall be dished to contain spills and cleaning liquids and shall be properly reinforced to support lead shielding and shielded containers. The load-bearing capacity shall be 200 pounds per square foot (90.71 Kg m2) minimum

© SEFA - 5th Edition Desk Reference - Version 3.0

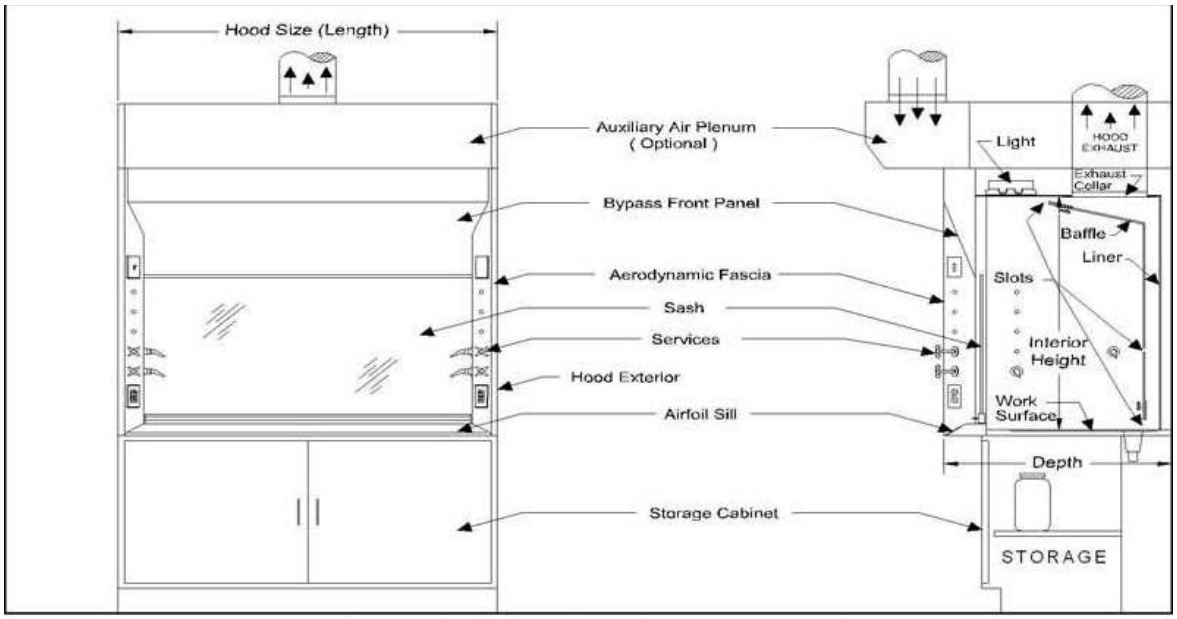

Fig. 5 Typical View of Bench Top Fume Hood

up to a total weight of 1,000 pounds (453.6 Kg) per fume hood or base cabinet section.

4.2.3 Perchloric Acid Fume Hood

A percloric acid hood has the general characteristics of a bench-top hood; however, the interior lining must be coved and welded seamless stainless steel (other non-reactive material such as CPVC or polypropylene have been used when heat is not a concern). Non reactive and corrosion resistant material should extend all the way through the exhaust system.

In addition, the hood, duct, and fan must have a water wash down system to remove perchlorates and prevent the build-up of potentially explosive perchlorate salts. Drain outlet shall be designed to handle a minimum of 15 gallons (56.8 liters) per minute. The work surface on perchloric acid hoods typically has a water trough at the back of the hood interior under the baffle. The fume hood liner in a perchloric acid fume hood shall have no access holes such as those which may be used for plumbing access. Access panels should be considered in the lab layout for access through the hood exterior. In nearly all other respects, however, the design of perchloric acid hood is the same as conventional or bypass fume hoods.

A perchloric acid hood shall never be tied to a manifold system.

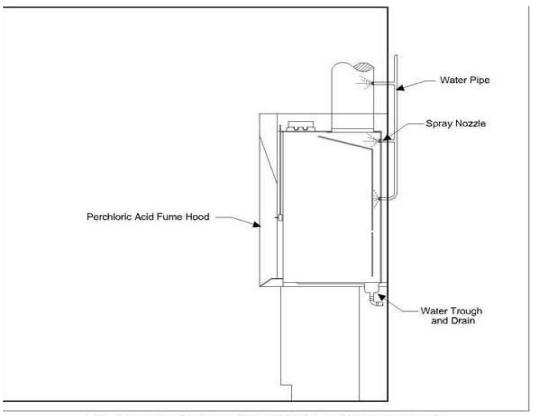

Fig. 6 Typical View of Perchloric Acid Fume Hood

4.2.4 Distillation Fume Hood

A distillation fume hood is designed for use with tall apparatus and procedures that involve small to medium quantities of low to high toxicity materials. A distillation hood has the same components as a bench-top hood with the exception that the design provides a greater interior height. The hood is suitable for work that can be conducted in a bench-top hood; however, the greater interior height enables use of larger apparatus.

Fig. 7 Typical View of Distillation Fume Hood

The distillation hood is mounted on a pedestal that elevates the work surface to a heightbetween 12 and 18 inches above the floor.

Distillation hoods can have vertical rising sashes or horizontal sliding panels. Generally, more than one sash panel is used on a vertical rising sash. The vertical sash design generally enables a rather large opening and care must be taken in determining the maximum allowable sash opening and required exhaust flow to provide a safe operating condition and ensure effective fume containment.

4.2.5 Floor Mounted Fume Hood (Commonly known as a Walk-in Fume Hood)

A floor-mounted hood is used for large apparatus and storage of containers that pose some hazard, but will not fit into an approved storage cabinet. A floor- mounted hood is suitable for the same type of work conducted in bench-top hoods and distillation hoods.

Floor mounted hoods are typically equipped with horizontal sliding sashes, although some models

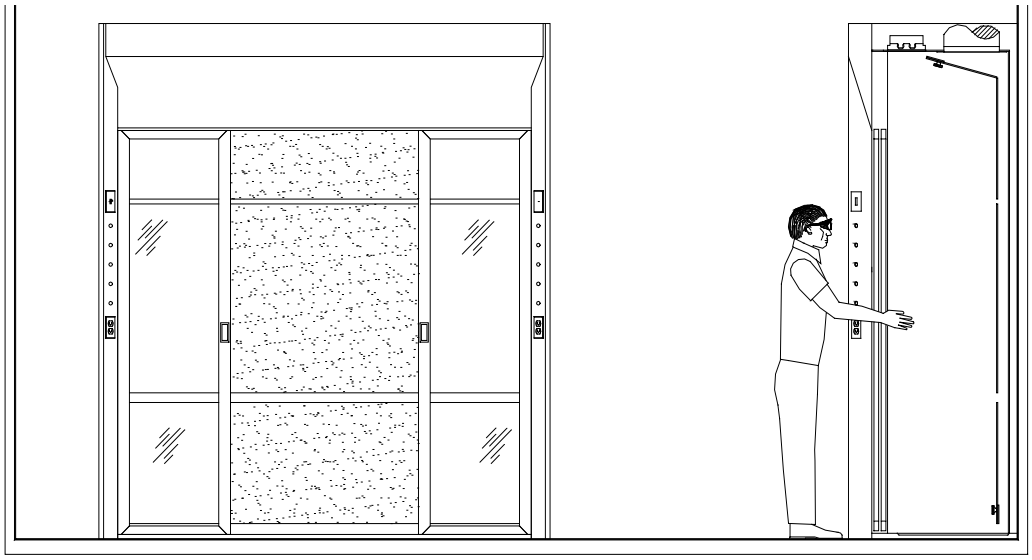

Fig. 8 Typical View of Floor Mounted Fume Hood

© SEFA - 5th Edition Desk Reference - Version 3.0

are equipped with multiple vertical sliding sashes. Horizontal sashes are recommended on hoods over eight feet in width.

The name "walk-in hood" implies that the hood can be entered; however, the name is a misnomer, as the same safety precautions should be applied to this hood, as those required for a bench-top hood. The hood must never be entered during generation of hazardous materials or while concentrations exist within the enclosure. For this reason, we refer to these structures as floor mounted fume hoods.

Floor mounted hoods are particularly susceptible to variations in face velocity across the opening and room air disturbances due to the large opening area afforded by the hood design. For this reason, it is prudent not to use a floor mounted hood for work with highly toxic materials.

It is recommended that only one sash be fully opened during hood operation on floor mounted hoods with multiple vertical sashes. Both sashes are to be fully opened during set up only.

4.2.6 Auxiliary Air Fume Hood

The auxiliary air system, when added to a standard laboratory fume hood, shall function to reduce the consumption of conditioned room air. The auxiliary air is typically introduced exterior to the fume hood face and enters the fume hood through the face with the sash(es) open.

With the sash(es) closed, auxiliary air shall be drawn into the fume hood interior in such a manner as to aid in the dilution of heat and fumes generated in the work area.

NOTE: Consideration should be given to preconditioning and filtering auxiliary air.

Auxiliary air fume hoods shall also conform to the following requirements:

- Provide safe capture and efficient removal of fumes from the hood when operated at air ratios specified by the manufacturer.
- Capture the percentage of auxiliary air specified by the manufacturer when operated with the sash(es) open or closed.
- Capture, contain and carry away fumes generated in the work area when operated at a condition of imbalance between the auxiliary air and room air as specified by the manufactures.
- Function in accordance with the performance characteristics listed above when tested by appropriate evaluation procedures.

- Never pressurize the hood chamber with auxiliary air.

The manufacturer shall include auxiliary air static pressure data for all standard catalog models.

4.3 Energy Efficient Fume Hood

Energy efficient fume hood (also known as Low Exhaust Volume, or LEV fume hoods) designs can offer significant reductions in the volume of exhaust air required to safely operate the fume hood. Energy efficient hoods can be divided into two categories: Low Flow Fume Hoods and Low Velocity Fume Hoods.

- Low Flow Laboratory Fume Hoods are hood designs that provide a reduction in the required exhaust air volume, when compared to the volume required for the same size fume hood to operate with a face velocity of 100 FPM through a fully opened vertical sash, e.g: a typical 6' wide bench mounted fume hood requires approximately 1100 CFM of exhaust flow to achieve an average face velocity of 100 FPM through a fully opened vertical sash. A 6' wide hood operating at less than the volumetric exhaust flow would be classified as a Low Flow fume hood.

- Low Velocity Laboratory Fume Hoods are hood designs that provide a reduction in the required exhaust air volume, when compared to the volume required for the same size fume hood to operate with a face velocity of 100 FPM through a fully opened vertical sash and provides containment levels equivalent or superior to ASHRAE 110 tracer gas test ratings of 4.0 AM 0.05, and 4.0 AI/AU 0.10, with a face velocity of 60 FPM or less through the fully opened vertical sash. Low

Velocity Fume Hoods are also referred to as High Performance Fume Hoods and High Efficiency Fume Hoods.

NOTE: Low Flow hoods which achieve a reduction in volumetric flow by restricting the sash opening area do not qualify as Low Velocity or High Performance fume hoods unless they also meet the performance requirements listed above through the maximum sash opening. The "maximum sash opening" shall be considered a vertical sash opening not less than 25" high off the fume hood work surface.

Energy efficient fume hoods often feature new designs and features not found on traditional fume hoods, including redesigned bypass systems, new baffle configurations, low profile airfoil sills and aerodynamic sash frame designs. Some manufacturers offer unique electrical and mechanical "safety controls" which are integral to the superstructure of the energy efficient fume hood. These control systems often enhance the safety afforded to the fume hood operator during use. The maintenance of these safety control systems should be performed in accordance with the manufacturer's guidelines to ensure safe and proper operation of the fume hood.

Energy efficient fume hoods are available in bench mounted, floor mounted, distillation and specialty hood types. Energy efficient fume hood designs are appropriate for almost all of the same applications as traditional fume hood designs. While energy efficient fume hoods can be integrated into any type of laboratory ventilation system, most often these style fume hoods are installed on Constant Air Volume (CAV) systems. However, these hoods can operate on Variable Air Volume (VAV) systems and Switched Two-State systems. The return-on-investment period should be evaluated when deciding which type of system to use.

It has been determined that there is no direct statistical correlation between a fume hood's average face velocity and the containment levels provided by the fume hood. (See: Hitchings, Dale T. "Laboratory Fume Hood Testing: Face Velocity Does NOT Equal Safety" Laboratory Safety & Environmental Management 3.6 (1995)).

On a properly designed fume hood, a lower face velocity can actually enhance fume hood performance through aerodynamic design and reduced turbulence. SEFA recommends the ANSI/ASHRAE 110 test to evaluate the performance of all laboratory fume hoods, including the energy efficient fume hoods. Currently, there are no special tests outlined in the ASHRAE standard for fume hoods operating at reduced exhaust flows. Energy efficient fume hood designs are tested to the same standard as traditional fume hood designs. However, the ASHRAE Standard allows for owners, engineers and/or architects to specify specific challenges to any fume hood design to investigate the fume hood's ability to perform under less than ideal conditions. Tests have been performed with the hood chamber loaded with equipment and apparatus, thermal challenges within the fume hood chamber, cross drafts, walk-by traffic, etc.

4.4 Testing of Laboratory Fume Hoods - As Manufactured

The ASHRAE 110 test is a method of testing the performance of laboratory fume hoods. There are three test procedures incorporated into the 110 test; the first is the face velocity grid test, the second is the flow visualization or smoke test and the third is the tracer gas containment test. The ASHRAE 110 is the recognized method for evaluating the performance of fume hoods; ASHRAE has defined three modes, As Manufactured (AM), As Installed (AI), and As Used (AU). The ASHRAE test should be conducted by an authorized person cognizant of each of the three test procedures.

4.4.1 Face Velocity

Face velocity shall be adequate to provide containment. Face velocity is not a measure of safety.

Refer to ASHRAE 110 – 1995 (or latest edition) for velocity measurement procedures.

Face Velocity Guide –The most widely accepted range of average face velocities is 60 FPM to 100 FPM. The measured deviation across the face may vary + 20 FPM. (For more information on this topic,

© SEFA - 5th Edition Desk Reference - Version 3.0

refer to Section 12.0 Regulatory and Industry Consensus Standards.)

4.4.2 Containment Testing – As Manufactured

The manufacturer shall provide standard (AM) test data for all standard hoods. This should be done in accordance with the most current ASHRAE 110 Standard. The AM testing demonstrates what the hood is capable of doing under controlled conditions. The report shall verify that all laboratory fume hood types specified have been tested to ASHRAE 110-1995 (or most current edition) procedures and have achieved AM 0.05.

AM 0.05 can be achieved with a properly designed laboratory fume hood. It shall not be implied that this exposure level is safe. Safe exposure levels are application specific and should be evaluated by properly trained personnel.

The ASHRAE 110 Standard includes procedures for:

Inspection of the Hood;
Evaluation of Laboratory Conditions;
Airflow Visualization;
Airflow Velocity Measurements; and
Tracer Gas Containment Tests.

4.4.3 Static Pressure - Bench Mounted Fume Hood

See Industrial Ventilation Manual for Static Pressure Measurement Procedures. (See: Ind. Ventilation: A manual of recommended practice, 24th Edition, American Conference of Governmental Industrial Hygienists, 1330 Kemper Meadow Drive, Cincinnati, OH 45240 www.acgih.org)

With sash at full-open position, static pressure loss through the fume hood shall be no more than ¼ inch (6.35 mm) of water gauge when the fume hood operates at face velocity of 60 feet per minute (.30 m/s), ½ inch (12.70 mm) of water gauge at 100 feet per minute (.51 m/s), ½ inch (12.70 mm) of water gauge at 120 feet per minute (.62 m/s). The manufacturer shall state the design static pressure loss for all standard catalog models. For all constant volume laboratory fume hoods equipped with a bypass, static pressure loss and exhaust volume shall be relatively constant regardless of sash position. The velocity when measured at the sash opened six inches, shall be no more than three times the velocity at the sash operating opening.

5.0 Laboratory Fume Hoods - As Installed

5.1 Location in Laboratory

Laboratory fume hood exhaust systems should be balanced with room exhaust systems and may be used in conjunction with room exhaust to provide the necessary room ventilation. Constant operation of a fume hood will also provide fume control during non-working hours. If the laboratory control system provides for proximity sensors at the fume hoods, reducing the face velocity through the open sash when users are not present at the fume hood face, fume control must still be maintained.

Laboratory fume hoods should be so located within the laboratory to avoid crosscurrents at the fume hood face due to heating, cooling or ventilating inlets.

Sufficient makeup air must be available within the laboratory to permit fume hoods to operate at their specified face velocities.

Other location factors to be considered are as follows:

Number and types of fume hoods in the laboratory space;

Location and number of ingress/egress aisles and/or laboratory space exterior doorways;

Frequency and/or volume of expected fume hood users;

Location of laboratory safety equipment.

5.2 Safety Considerations

Laboratory fume hoods are potential locations for fires and explosions due to the types of experiments conducted in these units. As

such, fume hoods should be located within the laboratory so that in the event of a fire or explosion within the fume hood, exit from the laboratory would not be impeded.
Laboratory fume hoods should be located away from high traffic lanes within the laboratory because personnel walking past the sash opening may disrupt the flow of air into the unit and cause turbulence, drawing hazardous fumes into the laboratory.

Sufficient aisle space should be provided in front of the fume hood to avoid disruption of the work or interference with the operating technician by passing personnel.

Safety devices such as drench showers, eye wash stations, fire extinguishers, first aid kits and fire blankets should be located convenient to the fume hood operating personnel and plainly labeled as to their use and function.

Other safety factors to be considered:

Type of research being conducted;

Proximity to associated bench mounted or free standing instrumentation machines;

Type and number of associated fume hood enclosures;

Number of research and/or student users in laboratory space.

Refer to SEFA 2 Recommended Practices for Installation.

Refer to SEFA 7 Recommended Practices for Laboratory Fixtures.

5.3 Fume Hood Evaluation – As Installed

Precondition for Testing: The test of the fume hood should be performed after the installation is complete, the building ventilation and control system has been balanced and all connections made. The testing should be performed in conditions appropriate for occupation of the lab space.

It is recommended that the user make provisions to have the following test performed on all laboratory fume hoods. These tests should be performed by qualified personnel to verify proper operation of the fume hoods before they are put to use. Testing should be repeated at least annually, or whenever a significant change in the hood system occurs. Any unsafe conditions disclosed by these tests should be corrected before using the hood. It is recommended that hoods be tested in accordance with ASHRAE 110-1995 (or most current edition) before put into service. Some form of annual certification should be incorporated at the owners discretion.

The ASHRAE 110 test is a method of testing the performance of laboratory fume hoods. There are three test procedures incorporated into the 110 test; the first is the face velocity grid test, the second is the flow visualization or smoke test and the third is the tracer gas containment test. The ASHRAE 110 is the recognized method for evaluating the performance of fume hoods; ASHRAE has defined three modes, As Manufactured (AM), As Installed (AI), and As Used (AU). The ASHRAE test should be conducted by an authorized person cognizant of each of the three test procedures.

5.3.1 Room Conditions

Check room conditions in front of the fume hood using a thermal anemometer and a smoke source to verify that the velocity of cross drafts should be less than 50% of the face velocity, not to exceed 30 FPM. Any cross drafts that exceed these values shall be eliminated before proceeding with fume hood test. Crosscurrents of sufficient magnitude can have a detrimental effect on the ability of a fume hood to contain and exhaust air contaminants. It is therefore advised to keep crosscurrents in the vicinity of the face of a fume hood to a minimum.

5.3.2 Sash Operations

Check operation by moving sash(es) through its (their) full travel. Sash operation shall be smooth and easy. Vertical rising sashes shall hold at any height without creeping up or down, unless designed otherwise. Force to

© SEFA - 5th Edition Desk Reference - Version 3.0

open the sash shall be reasonable for the size and weight of the sash. Typically a five foot hood with a vertical rising sash shall require approximately five pounds of force to operate the sash. An additional one pound of force may be required for each additional linear foot of fume hood width.

5.3.3 Evaluation of Low Air Flow Monitor

On fume hoods with low flow warning devices, verify that monitor functions properly and indicates unsafe conditions.

5.3.4 Face Velocity

Determine specified average face velocity for fume hood being tested. Perform the following test to determine if fume hood velocities conform to specifications.

Face velocity shall be adequate to provide containment. Face velocity is not a measure of safety.

Refer to ASHRAE 110 – 1995 (or latest edition) for velocity measurement procedures.

Face Velocity Guide – The most widely accepted range of average face velocities is 60 FPM to 100 FPM. The measured deviation across the face may vary + 20 %. (For more information on this topic, refer to Section 12.0 Regulatory and Industry Consensus standards.)

5.3.5 Containment Testing – As Installed

SEFA recommends the ASHRAE 110-1995 (or most current edition) test.

5.4 Trouble Shooting

When fume hood test procedures detect improper function, the cause is frequently due to insufficient quantity of air flowing through the hood, or due to room cross drafts blowing into or across the face of the fume hood, or a combination of both. The following suggestions are offered to help pinpoint and correct the problems.

5.4.1 Insufficient Airflow

Insufficient airflow through the fume hood can be caused by one or more of the following conditions. Each condition should be checked, and eliminated if possible to determine which one or combination of conditions may exist:

• Double-check your readings.

• Check airflow velocity meter type. When was it calibrated last? Is the battery good? Was the instrument zeroed before taking readings?

• Check to make sure the instrument is recommended for low air velocities in the 50 to 150 feet per minute (.25 to .76 m/s.) range.

If possible, verify readings with another air velocity meter or by checking air volume using a pitot tube traverse of exhaust duct.
Low airflow through the fume hood can be caused by a large negative room static pressure as a result of inadequate makeup air being brought into the room. With the fume hood and other exhaust unit in operation, check room static pressure by:

• Verification using inclined manometer.

• Checking inrush of air into the room through a door or an open window.

• Checking ventilation system balance and verify the quantity of makeup air.

• Verify that fume hood baffles are in an open position.

• Insure that baffle openings are not blocked with large or bulky apparatus. Improper sizing or operation of exhaust unit or both may be the cause.

• Confirm exhaust unit rotation is correct. Make and model is as specified.

• Supply voltage is correct.

• Motor horsepower and speed is appropriate.

• Exhaust unit inlet and outlet conditions are suitable.

• Check for special or bulky equipment that interferes with airflow through the fume hood.

5.4.2 Room Cross Drafts

Cross drafts in front of the fume hood face can cause the fume hood to lose containment and present a safety hazard to laboratory space occupants. Cross drafts in front of the fume hood should be kept to a minimum at all times and specifically when the fume hood is being used by an operator. Each of these issues should be investigated when cross drafts are suspected of causing poor fume hood performance.

Air moving through an open door located adjacent to the fume hood can cause cross drafts.

An open window or room air supply grill located to one side or across from the fume hood can cause disturbing cross drafts.

High velocity air from ceiling-mounted diffusers or room air supply can cause cross drafts or downdrafts.

Cross drafts can occur when thermal gradients in the lab space are caused by the introduction of supply air at a significant T, compared to the ambient temperature in the lab space. The proper operation of the building reheat controls, the position of the lab space thermostats and the supply register location can all affect the creation of these thermal gradients. Room conditions such as these should be avoided, if at all possible, by the location of the fume hood or changing the design of or modifying the location of supply air diffusers. The velocity of the cross drafts should not exceed 50% of the face velocity or 30 FPM.

5.4.3 Exhaust Unit and Duct Considerations

Where laboratory building design permits, the exhaust unit should be located on the roof of the building to provide a negative pressure in that portion of the duct system located within the building.

The exhaust unit should be sized to exhaust the volume of air necessary to attain the selected fume hood face velocity at the total system static pressure loss. Care should be taken to ensure the exhaust unit has sufficient stack velocity and orientation to reduce the possibility of re-entrainment of contaminated exhaust air into the lab building, or an adjacent building's supply air intakes.

Exhaust units should be sized to achieve the lowest practical angular speed of the impeller, thereby avoiding high impeller tip speed and minimizing noise associated with this revolving member.

Ductwork shall be designed and constructed in accordance with approved standards (ASHRAE, NFPA, SMACNA) and regulations, for minimal friction losses within the duct, smooth interior surfaces are recommended.

Elbows, bends and offsets within a duct system should be kept to a minimum and should be long sweep in design configuration in order to minimize static pressure losses. When practical, a straight run of duct from the fume hood duct collar for as long a length as possible, is preferred.

Fume hood and other exhaust devices shall not interconnect with re-circulating systems.

5.4.4 Make-up Air

Make-up air is a ventilation term indicating the supply of outdoor air to a building replacing air removed by exhaust ventilation systems. In general, laboratories require four to twelve total volume changes per hour. Refer to OSHA 1910.1450, Page 492 and NFPA 45, 2000, Page 45-27, A.6.3.3. Special applications may require more air changes per hour.

A sufficient quantity of makeup air must be available to allow fume hoods to develop required face velocities.

Consideration must be given to the makeup required for air changes in each specific laboratory involved. This data must be coordinated with fume hoods and ventilation equipment.

In order to provide a balanced and functioning system, all factors such as fume hood exhaust volume, air change data, makeup air systems and

© SEFA - 5th Edition Desk Reference - Version 3.0

auxiliary air performance, if applicable, must be considered.

Due to the possibility of toxic and/or hazardous material being handled within laboratories, air exhausted from these laboratories should not be re-circulated.

Laboratories using chemicals should operate at a slight negative pressure as compared to the remainder of the building.

5.4.5 Laboratory Fume Hood Inspection and Maintenance

Inspection procedures should include instrument verification of fume hood face velocity, which should be equal to the velocity recorded at the time of the ASHRAE 110-95 (or latest edition) performance test and fume hood commissioning.

Inspection procedures should consist of a physical examination of liner condition and cleanliness, baffle and sash operation and condition, counter balance cables, light operation and condition, and service fixture function.

Inspection results should be recorded and reported to the proper authority for any required action. Where extremely hazardous or corrosive conditions exist or when filters are present in the system, the inspection frequency should be increased appropriately. Velocity and pressure sensing detectors should be tested at each inspection. Low-flow or no-flow alarms of the visible or audible type should be tested for correct operation at least at each inspection. Fan belts should be inspected regularly.

5.5 Maintenance

Fume hood maintenance procedures consists primarily of clean up, adjustments, lubrication and replacement of worn, damaged or nonfunctioning parts. Use good housekeeping in laboratory fume hoods at all times. Periodically clean sash(es), exterior and interior surfaces, including light panel. Replace lamps periodically to maintain adequate illumination.

Clean up should be accomplished by, or under the supervision of a knowledgeable laboratory safety officer and should include removal of the baffle for clean up of all interior surfaces.

Lubrication of sash guides, cables, pulley wheels, sprockets, chains and other working parts should be accomplished as required or in accordance with manufacturer's recommendations.

Flush all spills immediately using neutralizing compounds as required and clean thoroughly.

6.0 Laboratory Fume Hoods - As Used

6.1 Safe Work Practices

The employer is responsible for ensuring that the hood meets satisfactory safety standards. A hood operator is responsible for ensuring that the hood is used in a safe manner and according to your organization's safety guidelines. A hood operator is also responsible for helping their organization maintain proper operation of the hood systems.

The following guidelines are provided to help reduce your potential for exposure when working with hazardous materials.

- -Plan for conducting experiments.
- -Wear appropriate personal protection.
- -Verify proper system operation.
- -Utilize proper work practices.

6.2 Plan for Conducting Experiments

Prior to conducting potentially hazardous procedures in a laboratory fume hood, evaluate the hazards and consult with a Safety Officer to develop appropriate safety protocols and evaluate whether the hoods and systems have the capability to provide adequate protection. In addition, follow the guidelines provided in your Chemical Hygiene Plan. If the guidelines are inadequate or inappropriate, help develop or amend procedures with your Chemical Hygiene Officer.

Prior to starting an experiment in a hood, answer the following questions:

What are the characteristics of the hazards associated with the procedure?

Is this the right type of hood?
Will the hood accommodate the equipment and experimental apparatus?

Is the hood capable of capturing and exhausting the contaminants?

What are the hood capabilities and limitations?
What special precautions are required?

Verify that the ventilation system is working properly.

For example, if you are going to conduct a procedure involving use of heated perchloric acid, you must use a perchloric acid hood and the exhaust system must be equipped with a water wash down system. Failure to use a perchloric acid hood with a water wash down system could result in a future explosion or fire. Another example is to be cautious with a heat generating processes. Generated velocity due to the heat in a hood could result in counterproductive airflow. Is the fume hood liner resistant to the heat loads?

6.3 Wear Appropriate Personal Protection

Prior to conducting experiments wear appropriate personal protective apparel as required by the Chemical Hygiene Program and safety protocols. It is generally accepted that at a minimum, the appropriate apparel for working at a laboratory fume hood includes approved eye protection, lab coat, gloves, long pants and shoes (preferably safety shoes, open shoes such as sandals are not recommended).

Ensure that clothing and glove materials are appropriate for work with the hazards. For example, vinyl gloves provide excellent resistance to formaldehyde, but poor resistance to chloroform.

If unsure of the appropriate type of personal protective equipment required, consult with your Chemical Hygiene Officer.

6.4 Fume Hood Evaluation - As Used

The ASHRAE 110 test is a method of testing the performance of laboratory fume hoods. There are three test procedures incorporated into the 110 test; the first is the face velocity grid test, the second is the flow visualization or smoke test and the third is the tracer gas containment test. The ASHRAE 110 is the recognized method for evaluating the performance of fume hoods; ASHRAE has defined three modes, AS Manufactured (AM), As Installed (AI), and As Used (AU). The ASHRAE test should be conducted by an authorized person cognizant of each of the three test procedures.

Safety considerations require that a schedule of inspection and documentation be set up for every laboratory fume hood at least annually.

An inspection record should be maintained. This record may be in the form of a label attached to the fume hood, and/or a log maintained by the Laboratory Director or Health Safety Director. Include sash operation, low airflow monitor, and containment test evaluations.

Before generating hazardous materials within the hood, you should ensure that the hood system is in good working order.

Check the hood integrity and verify adequate exhaust flow or face velocity. At a minimum, check the hood inspection notice to ensure that the hood has been recently tested and operation was satisfactory at the time of the tests.

As hoods are part of a mechanical system, it is possible that operational problems could develop between routine performance tests and preventative maintenance activities. Report alarms or suspected operational problems immediately.

If any problems are suspected with hood operation, immediately contact your Chemical Hygiene Officer or follow your facility's procedure for reporting problems.

Verifying proper system operation without a hood monitor is very difficult. All hoods shall have some

© SEFA - 5th Edition Desk Reference - Version 3.0

type of monitor to verify proper exhaust flow and/or average face velocity. If your hood does not have a monitor, request one.

6.5 Utilize Proper Work Practices

Ultimately the ability of the hood to provide adequate protection depends on the user. By utilizing proper work practices, the potential for exposure can be reduced. Limitations inherent in many hoods and systems make proper work practices required to optimize containment.

6.5.1 Proper Location of Equipment and Apparatus

The location of equipment and apparatus effects the airflow patterns within the hood. Vortices form downstream of a person standing at the opening. When obstructions are placed directly in front of the operator or improperly located within the hood, the problems with reverse flow and turbulence can be exacerbated.

The following guidelines are provided for properly locating equipment and apparatus within the hood:

Always locate equipment as deep into the hood as practical and at least six to eight inches beyond the plane of the sash. For hoods that have a recessed work area, equipment and apparatus should not be placed on the raised ledge in front of the work area.

Equipment should never extend beyond the plane of the sash or restrict the sash from closing.

Elevate equipment two to three inches above the work surface to provide flow beneath and around the equipment.

Ensure that elevated equipment is stable. Plexiglas or stainless steel slotted shelves can be used to elevate equipment and apparatus above the bottom slot in the baffle. Slotted or perforated shelves minimize disruption to airflow patterns.

Excessive equipment and apparatus in the hood should be avoided. As a rule of thumb, no more than 50% of the work surface should be covered by equipment, apparatus or other bulky obstructions.

Caution is advised when placing equipment requiring electrical power in the hood. The equipment must be properly grounded to reduce the potential for sparks. Power cords should be plugged in a properly grounded and approved outlet.

High heat loads create thermal drafts which

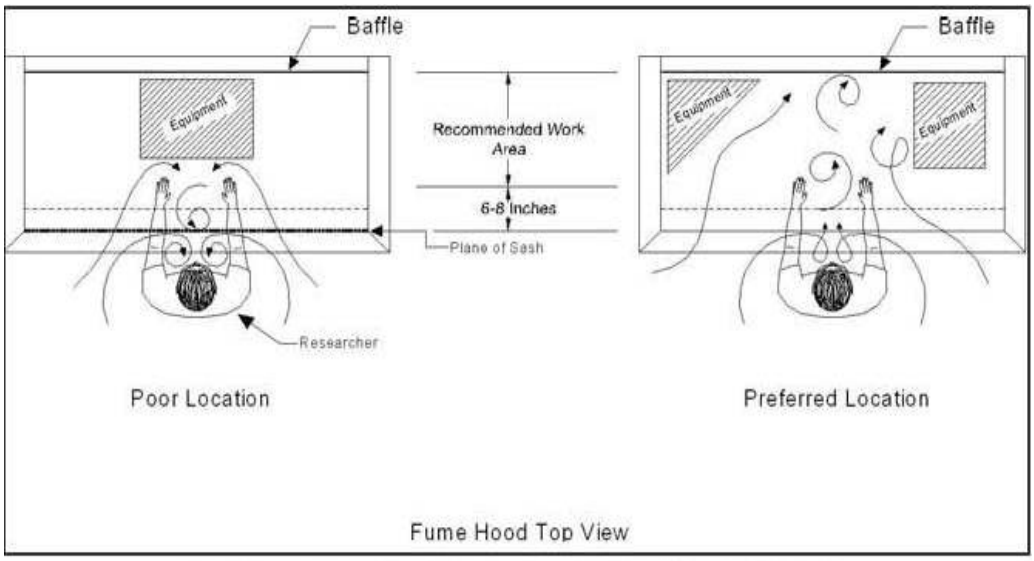

Fig. 9 Diagram Showing Effects of Locating Equipment, Materials and apparatus in the Fume Hood

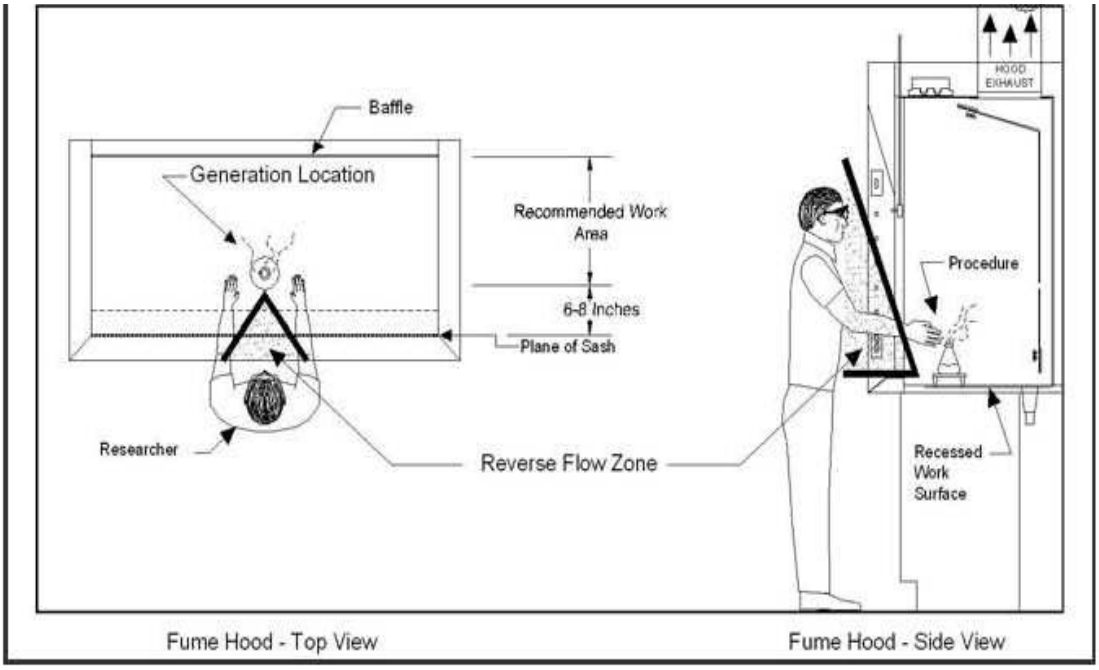

Fig. 10 Diagram of Proper Locations for Generating Hazardous Material within the Hood

increase face velocity through the bottom of the fume hood opening and thus lower face velocities at the top of the fume hood opening. Excessive heat loads can cause the fume hood to lose containment. If high heat loads are expected during the normal operation of the fume hood AU ASHRAE testing should be conducted under the same conditions to test fume hood performance.

If a distillation rack (also known as "lattice rack" or "monkey bars") is installed in the fume hood, the rack should be positioned in such a location that it is accessible from the operating sash opening.

6.5.2 Desired Operator Position and Movements

The hood user should always be aware of locations within the hood where concentrations of contaminants can accumulate. The user should never allow his head to break the plane of the sash because this will cause contaminated air to pass through the breathing zone.

When materials are being generated in the hood, ensure that you slowly approach and withdraw from the hood. The wake zone created by movement near the hood opening can withdraw materials from within the hood.

Rapid arm and body movements near the hood opening should be avoided.

6.5.3 Proper Configuration of Vertical and Horizontal Sliding Sashes

The vertically sliding sash should always be lowered as much as possible to protect the user and to minimize visual obstruction from sash handle. Raise the sash to full open position for set-up purposes only.

Reducing the sash to below the user's breathing zone provides a protective barrier between the researcher and the experiment.
As air enters the opening of a hood with horizontal sash panels, turbulent vortices develop along the vertical edges of the sash panels. The vortex, readily visualized using smoke, can extend deep into the hood and draw contaminants toward the edges of the sash panels.

High concentrations can develop near the edge of the sash panels regardless of the generation location within the hood. Although escape is not usually observed, rapid movements near the sash

© SEFA - 5th Edition Desk Reference - Version 3.0

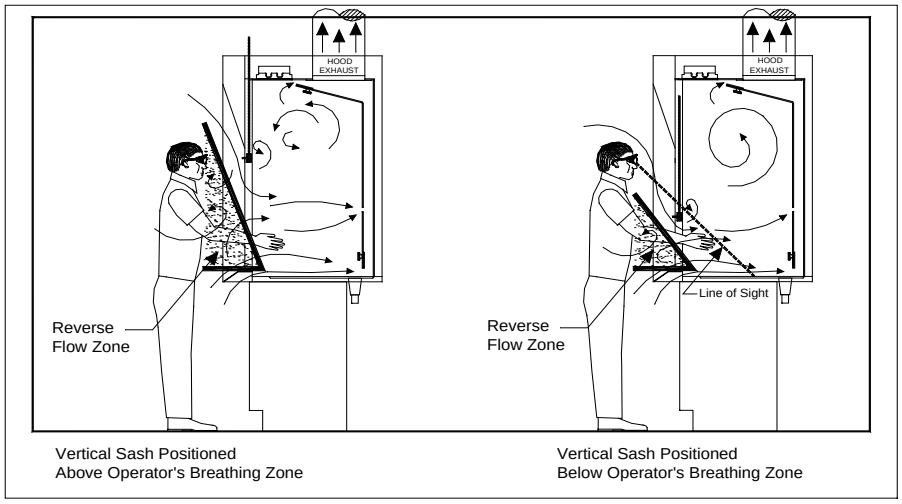

Fig. 11 Diagram Showing Effects of Lowering Sash Below Operators Breathing Zone

edge or turbulence resulting from cross drafts could cause escape.

A horizontal sash panel provides an effective barrier to splashes or explosions, but remember that high concentrations can develop inside the sash panels. As a general rule, you should avoid rapid movements near the vertical edges of the sash panels.

Avoid rapid withdrawal from the hood.

6.5.4 Reduce Pedestrian Traffic Near The Hood

A person walking past the hood can generate significant cross drafts. When generating hazardous materials in the hoods, attempt to divert or limit traffic past the hood. Inform other laboratory personnel about the work being conducted in the hood.

6.5.5 Ensure Hoods are Cleaned and Decontaminated

Following procedures involving highly toxic, potent or radioactive materials, the hood interior should be cleaned and decontaminated. Contaminated hoods should be clearly labeled. Maintenance personnel should also be informed of the potential for duct contamination. In several cases, maintenance personnel have been injured while working on hood systems that have been used for work with perchloric acid and appropriate decontamination methods had not been followed.

6.5.6 Do Not Store Materials In The Hood

Laboratory fume hoods should not substitute for an approved chemical storage cabinet. Hood performance is impaired by excessive storage of materials in the hood and the available work surface is reduced.

6.5.7 Summary of Proper Work Practices

The following list summarizes guidelines for working in a chemical hood:

Always work at least six inches beyond the plane of the sash. The farther the work is into the hood the better.

Avoid rapid withdrawal from the hood.

Close horizontal panels on combination sashes before opening the sash vertically.

Always close the sash when not working in the hood.

Baffles should only be adjusted per manufacturer's recommendation. If baffle settings are modified,

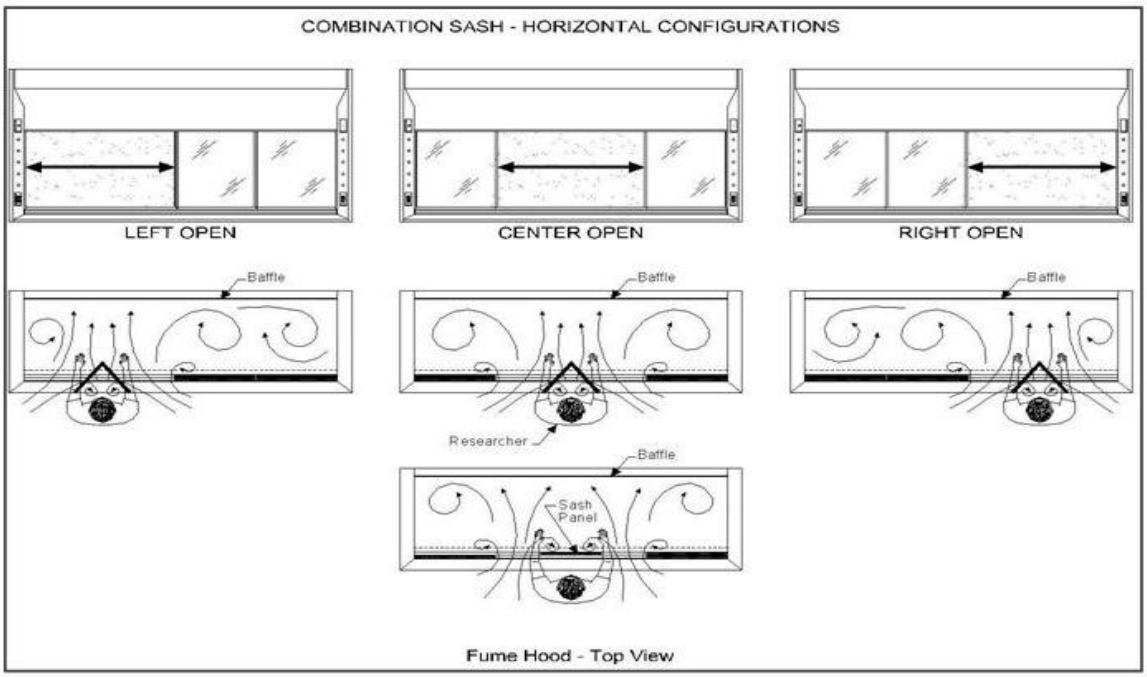

Fig. 12 Diagram of Airflow Patterns for Different Horizontal Sash Configurations

it is recommended that the fume hood is tested to the ASHRAE 110 standard under all baffle configurations.

Elevate contaminants and equipment above the surface of the hood to enable flow beneath and around the obstructions.

If equipment and material storage is necessary, locate along the sidewalls or well away from the point of contaminant generation. Do not store any equipment that restricts the closing of the sash or blocks the bottom slot of the baffle directly in front of the user.

Keep movements in the hood and in front of the hood to a minimum.

Keep motion in the lab to a minimum while working in the hood. Traffic past the hood can generate considerable cross drafts.

Ensure head and upper body remains outside the plane of the hood opening at all times.

Always attempt to slowly approach and withdraw from hood. Open and close the sash slowly.

© SEFA - 5th Edition Desk Reference - Version 3.0

6.6 Responsibilities for Ensuring Proper Hood Performance

Ensuring performance of laboratory fume hood systems is the combined responsibility of:

Group	Responsibility
Management (6.6.1)	Ensure health and safety of laboratory personnel
Principal Research Investigators (6.6.2)	Provide information about hazards and scientific procedure
Health and Safety (6.6.3)	Develop Safety Operating Procedures (SOP
Lab Design Team And Engineering (6.6.4)	Identify needs and design/specify appropriate building system, fume hoods and laboratory components
Construction Team (including laboratory fume hood installer (6.6.5)	Construct/install in accordance with contract documents
Controls Manufacturer (6.6.6.)	Provide Product(s) in accordance with contract documents
Building System Commissioning (6.6.7)	Verify function of lab controls and the ability of the system to meet all required set points
Operations and Maintenance (6.6.8)	Develop and implement Operations and Maintenance Program
Laboratory Personnel and Laboratory Fume Hood Users (6.6.9)	Comply with Standard Operating Procedures (SOP)
Laboratory Fume Hood Manufacturer (6.6.10)	Provide product(s) in accordance with contract documents. Provide product(s) that perform in accordance with safety standards

Although your organization's management is ultimately responsible for the health and safety of laboratory personnel, a team approach is required to ensure proper performance of laboratory fume hood systems.

The following list provides a summary of responsibilities for each group involved with ensuring proper operation of laboratory fume hood systems.

6.6.1 Management

Provide commitment to health and safety.

Provide leadership.

Direct and coordinate activities.

Allocate sufficient resources.

6.6.2 Principal Research Investigators

Identify personnel risks and characterize scientific procedures.

Evaluate hazard potential.

Work with Health and Safety to develop safety protocols, training programs, and select appropriate hoods.

Submit all requests for new hoods to Health and Safety.

Inform Health and Safety of significant changes in research activities.

Support (embrace) Health and Safety's Standard Operating Procedures.

6.6.3 Health and Safety

Develop and manage the Chemical Hygiene Plan (Standard Operating Procedures).

Administer Laboratory Fume Hood Safety Program.

Determine exposure control requirements. Provide hood operators with MSDS information on

materials being used in the fume hood.
Ensure proper selection and use of hoods.
Determine protocol for proper operation.

Ensure users are informed of hood capabilities and limitations (Training).

Develop and review safety standards periodically.

Conduct and/or review periodic hood performance tests.

Review all requests for new hoods.

Confirm that hood performs as required.

6.6.4 Laboratory Design Team and Engineering Identify needs.

Design appropriate building system(architectural, mechanical, electrical, plumbing, structural etc.).

Design and specify appropriate fume hood system.

Assist with pre-qualification of construction team.

Review all proposed changes.

Prepare "as built" documents.

Ensure design intent is achieved and commissioned.

6.6.5 Construction Team

Construct and install in accordance with contract documents, and regional, local and national codes.

Provide coordinated effort to meet design and performance requirements.

Coordinate field changes with other appropriate team members.

6.6.6 Controls Manufacturer

Supports design and specification of appropriate fume hood control system.

Provide product in accordance with specifications and contracts.

Provide start-up of fume hood control system.

Provide training in proper operations and maintenance for product.

6.6.7 Building System Commissioning

Verify fume hood flow rate.

Verify function of controls.

Verify ability to meet design set points for temperature, airflow, and room pressurization.

6.6.8 Operation and Maintenance

Ensure regular maintenance on all system components.

Ensure proper operation within specified tolerances.

Ensure no unauthorized changes to hood systems.

Ensure maintenance personnel are familiar with hazards and safe work procedures.

Ensure maintenance personnel are fully trained.

6.6.9 Laboratory Personnel and Hood Users

Understand the hazards.

Understand the capabilities and limitations of hoods.

Verify proper operation prior to use.

Use proper work practices in compliance with SOP.

Report suspected operational problems.

6.6.10 Hood Manufacturer

Hood is built to specifications.

Hood performs as expected "as manufactured."

© SEFA - 5th Edition Desk Reference - Version 3.0

Technical information associated with hood design.

Hood shall be manufactured in conformance with SEFA-1.

Provide product training and verification as requested.

Provide basic safety precautions posted clearly on the fume hood.

Provide troubleshooting assistance when hood fails to meet expectation "as installed."

7.0 Laboratory Ventilation Systems

Laboratory ventilation systems include both exhaust and supply duct systems. The purpose of a laboratory exhaust system is to exhaust a specific volume of air from laboratory fume hoods or other exhaust devices and safely transport the contaminated air from the building in a manner that reduces the potential for re-entrainment of exhaust fumes into the fresh air intake in the building. According to a number of industry standards, the supply air system must make up the air exhausted from the laboratory with 100% fresh outside air, conditioning it to provide a safe and comfortable work environment for the lab space occupants. The amount of supply air delivered to a laboratory is controlled to satisfy the demand for minimum ventilation (ACH) rate, hood flow demand or cooling / heating load demand, whichever is greater. In order to maintain the negative pressure requirement, the total exhaust volume for a lab must always exceed the supply air volume by a specific volumetric offset or the flows must be controlled by a pressure differential control system. The volumetric offset method is the most common. If the total of all hood exhaust is less than the maximum possible supply flow, an additional exhaust device, normally referred to as the general exhaust valve, is required.

Many factors affect the performance of hoods and laboratories, none of which receives more discussion than the airflow control strategy. The flow control strategy significantly impacts laboratory fume hood containment, room pressurization and energy usage.

7.1 Airflow Control Strategy

There are three main airflow control strategies for laboratories with fume hoods.

The first and most widely used, Constant Volume (CV), has been in use since the early 20th century. Second is Two-State Control (2SC), introduced in the 1960's. And finally, Variable Air Volume (VAV) has been gaining popularity and effectiveness since the 1980's. Specific applications are well suited to each. The energy efficient fume hood designs can be used on any of these systems and can further reduce the total volumetric flow requirements of the HVAC system.

7.1.1 Constant Volume (CV)

Constant volume systems are designed to exhaust a constant volume of air from the laboratory fume hood regardless of hood use, sash position or operating mode. Caution must be exercised by the designer and commissioning agent to ensure that sash stops and flows are properly selected, and you consult with the hood manufacturer for proper airflow requirements.

7.1.2 Two-State Control

Two-state fume hood control is simply a low/high volume control system. This control approach gains energy efficiency over CV systems to the extent that the hoods remain in the low flow level.

The low and high volumes are changed by various methods such as a sash position switch, light switch, and user presence sensors, the most common of which are sash switches and wall (manual) switches. Sash switches are used to change the flow based on the open area of the fume hood sash.

The energy savings of the two-state approach is improved over constant volume, but may require an audible alarm that reminds a hood user to close the sash. The use of controls also adds more maintenance costs to the system, compared to a CV system.

7.1.3 Variable Air Volume (VAV) Systems

A variable air volume fume hood control system is designed to vary the hoods' exhaust rate to maintain a constant average face velocity throughout the sash travel. The complexity of this system requires fast, stable control systems, which are more expensive, on an installed cost basis, than constant volume control systems. Energy savings can be further improved to potentially offset these higher costs.

Room pressurization is commonly maintained by adjusting the make up air to a fixed offset relative to the total exhaust flow. A small percentage of facilities choose to maintain pressurization by controlling the pressure differential.

If the minimum total hood flow for a laboratory is lower than the exhaust flow required to maintain the negative pressure in the lab, a general exhaust device may be required to provide minimum ventilation and proper temperature control. In this case, the total exhaust (hoods plus general exhaust) airflow rate is increased to overcome the added supply requirements.

Below is a diagram of a simple VAV system. (See: Figure 14).

7.1.4 Summary of Air Control Strategies

The cost of operating a laboratory fume hood is very significant and will continue to be a major concern until alternative forms of renewable energy are readily available. As of early 2002, the range of first pass estimates range from $4 to $7 per CFM per year to operate the laboratory ventilation systems. Reducing flows when appropriate, through the use of an energy efficient fume hood design and/or through a usage-based flow setback, can result in significant cost savings.

One of the primary goals of the designer is to provide a safe environment for researchers. Meeting this objective requires containment at hoods and at the room level. Room pressurization is an important consideration for laboratories.

7.2 Room Pressurization

The standards and guidelines stress the importance of room pressurization for laboratory spaces. Laboratories that use laboratory fume hoods should be maintained at a relative negative pressure to corridors and other adjacent spaces in the building (with the exception of clean room laboratories that may operate under positive pressure).

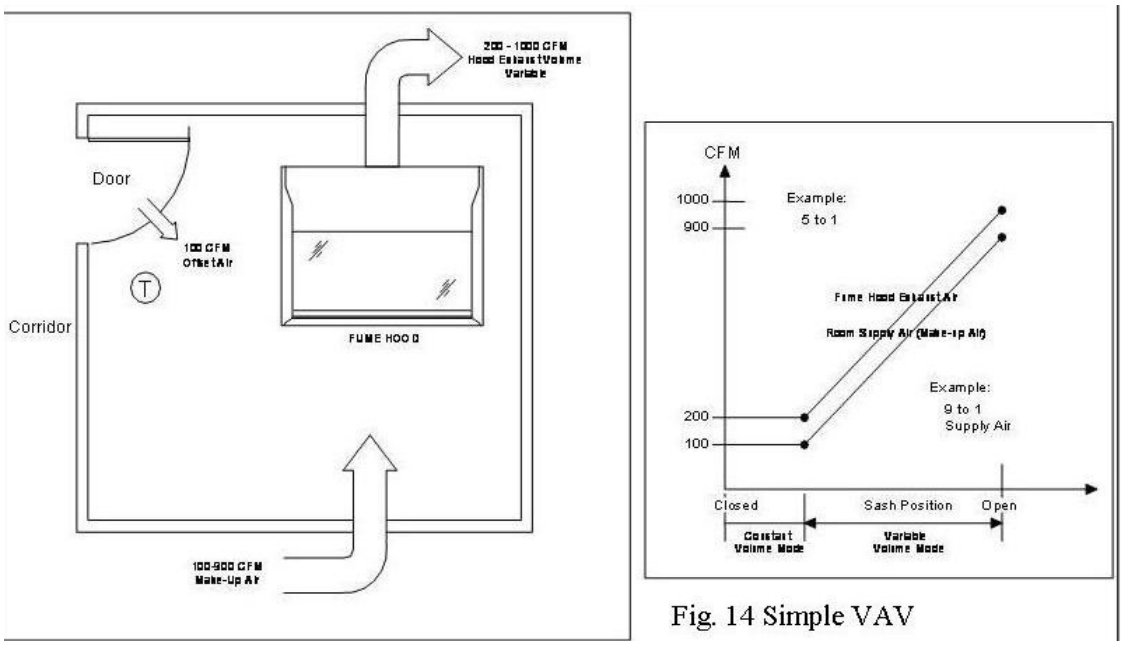

Fig. 14 Simple VAV

© SEFA - 5th Edition Desk Reference - Version 3.0

7.3 Diversity

Diversity is used by engineers in designing systems based on its practical or maximum expected use, not its total possible use. When diversity is applied to sizing of systems, the design capacity is less than the sum of peak demands.

Both existing and new laboratories can benefit from applying diversity to the HVAC design. Diversity allows existing facilities to add fume hood capacity using the current HVAC systems. Diversity design in new construction allows the facility to reduce capital equipment expenditures by downsizing the mechanical systems during the design phase.

Diversity can be applied only after providing the required number of air changes in the laboratory and the minimum flow to control room temperature. For these reasons, some laboratories cannot reduce the total hood exhaust flow capacity.

For either type of facility, designers must develop a solution that best fits the customers' needs. However, some designers are hesitant to use diversity since the savings are only realized when the sashes are lowered. Often, this has lead to systems with methods of "forced" diversity that have proven problematic.

Mechanical sash stops prevent a user from opening a sash beyond a predetermined maximum setting. Unfortunately, users often override these mechanical stops for everyday activity and for setting up experiments. This can create a dangerously low face velocity profile if the controller is not sized for full sash opening and if the fume hood is not designed to operate at lower face velocities. Insure that low flow alarms are working properly.

A system that automatically switches between standard and setback flow can provide greater diversity than other systems. (See: Varley, J.O.– ASHRAE Trans. 1993, Vol. 99, Part2, Paper number DE-93-18-2, 1072-1080, 2figs., 3tabs., 6refs. AND in Laboratory HVAC, 1995, 45-51 ISBN 1-883413-25-7. See also: Parker, J.A., Ahmed, O., and Barker, K.A. –ASHRAE Trans., 1993, Vol. 99, Part 2, Paper number DE-9-18-3, 1081-1089, 11figs., 2 tabs.) The hood design should be tested to the ASHRAE 110 Standard at the setback flow if the setback can occur through an open sash.

Some Factors Affecting Diversity:

Control Method
Constant Volume CV
Variable Air Volume VAV
Two State Controls

Usage Pattern

Number of users per fume hood
Fume hood usage type
User compliance

Sash
Sash type
Sash management

Airflow Requirements

Face velocity
Cooling airflow rate
Minimum ventilation rate

Number of Floors and Size of Building

Fume Hood Density
Number of fume hoods per lab
Number of fume hoods per manifold.

8.0 Other Ventilated Laboratory Safety Devices

All ventilated devices used in a laboratory are safety devices and should be carefully examined for application and safe working practice. Some experts believe that all ventilated enclosures should be called a laboratory fume hood and tested to fume hood standards. This is not possible because many enclosures are suitably made of flammable materials, are sized for their application and operate safely for the intended purpose, but not as a fume hood.

Products described in this section are not fume hoods by the definition in Section 3. Testing of

these products is not covered in the ASHRAE 110-1995 (or most current edition) Standard. As such, great care must be taken to insure that the product being evaluated is functioning safely for the intended purpose. It is not possible for SEFA to presuppose all applications and as such this section is intended to be used as a guideline only, not a definitive source. Contact your Chemical Hygiene Officer to evaluate your specific application.

8.1 Special Purpose Hoods

Special purpose hoods are hoods that are modifications of fume hoods. As such, they fail to meet the exacting definition of a fume hood and shall be classified as a special purpose hood. Common modifications to fume hoods include: baffle designs, sash configurations and locations, size, and materials. Special purpose hoods are designed specifically for that purpose, where a fume hood tends to serve a more general application. Special purpose hoods shall be designed, tested, and operated with their respective intended purpose in mind.

8.1.1 Demonstration Hood

Examples – Multi Sided, Pass Through Hood, Dual Entry Hood, Trifacial Hood

Description

A demonstration hood is a bench hood that provides visibility of the hood interior from multiple sides. Often a demonstration hood provides access from two or more sides. Demonstration hoods may or may not have a baffle system.

Purpose or Application

A demonstration hood is typically used by educators who interact with students via demonstration of experiments. A demonstration hood may or may not function as a fume hood because they typically deviate from traditional baffle systems, sash arrangements and often do not utilize front airfoils.

Reference Organization

None

Testing Recommendations

Some hoods may be tested using the ASHRAE 110-1995 (or most current edition) Standard. Others will require test modifications due to size, sash location, and when to test for multiple sash positions. Consideration must be made to the toxicity of the experiment and acceptable exposure levels. The manufacturer should make recommendations for the specific testing of this product including a velocity profile, smoke visualization, and a filter integrity test if a filter is part of the system.

Additional Comments

Contact your Chemical Hygiene Officer for safe exposure levels and for testing recommendations before working in a demonstration hood.

8.1.2 California Hood

Description

A California hood is an enclosure that has access to at least two sides, and it usually provides visibility from all four sides similar to a demonstration hood. A California hood differs from a demonstration hood in that it is taller than a bench hood (floor-mounted height), is always set atop a pedestal, and comes equipped with a distillation rack.

Purpose or Application

A California hood is used when large distillation apparatus is required and fumes from the distillation should not be present in the open laboratory.

Reference Organization

None

Testing Recommendations

ASHRAE testing must be modified because the hood opening is much larger than a bench

© SEFA - 5th Edition Desk Reference - Version 3.0

laboratory fume hood and has multiple sash configurations. Containment levels for California hoods are normally unfavorable to fume hood specifications since the hood rarely has a baffle system, and has unique sash configurations. The manufacturer should make recommendations for the specific testing of this product including a velocity profile, smoke visualization, and a filter integrity test if a filter is part of the system.

Additional Comments

Contact your Chemical Hygiene Officer for safe exposure levels, special considerations during set-up and tear-down, and for testing recommendations before working in a California hood.

8.1.3 Ventilated Hoods and Enclosures

A ventilated enclosure is a general term used to describe any special purpose hood that is otherwise not specifically described as a California hood or demonstration hood.

8.1.3.1 Oversized Hood

Description

Laboratory fume hoods are sometimes built in large, non-standard sizes to accommodate a specific application. Generally, laboratory fume hoods as long as twenty feet reflect the basic tenet of a laboratory fume hood, but larger structures may not. These larger structures shall be referred to as oversized hoods and not a laboratory fume hood.

Purpose or Application

Oversized hoods are often designed to accommodate a specific piece of equipment that must be housed in the hood during the experiment. Sometimes the scale of the work done in the hood determines the desired size of the hood.

Reference Organization

None

Testing Recommendations

Extensive knowledge of the testing apparatus or experimentation, or work being done in the hood is required for determining the safe testing methods of an oversized hood. Contact your Chemical Hygiene Officer before working in an oversized hood. The manufacturer should make recommendations for the specific testing of this product including a velocity profile, smoke visualization, and a filter integrity test if a filter is part of the system. Testing an oversized hood will require extensive interpretations of the ASHRAE 110-1995 (or most current edition) test procedure. Oversized hoods may require more and different diffuser locations, and sash arrangements must be considered before testing.

Additional Comments

Contact your Industrial Hygienist for safe exposure levels, proper use of sash positions, special considerations during set-up and tear-down, operating procedures and for testing recommendations before working in an oversized hood

8.1.3.2 Table Top Hood

Examples – Portable Hood, Down Draft Hood (A Down Draft Hood is a Table Top Hood that is vented down through the table top into an exhaust fan system).

Description

A portable hood is a ventilated enclosure that is small (usually less than 15 cubic feet of working space), is often made of alternate materials (such as epoxy, polycarbonate, acrylic or sheet metal) for mounting on a tabletop.

Purpose or Application

Used primarily in educational laboratories to control nuisance contaminants or small, microscale experiments.

Reference Organization

None

Testing Recommendations

A table top hood may be tested to the ASHRAE 110-1995 (or most current edition) test if the hood is large enough to contain the apparatus and a sash is apparent. If not, evaluate containment by modifying the test methods or by smoke visualization. The manufacturer should make recommendations for the specific testing of this product including a velocity profile, smoke visualization, and a filter integrity test if a filter is part of the system.

Additional Comments

Do not use this product for anything but nuisance vapor protection, unless otherwise certified by your Chemical Hygiene Officer.

8.1.3.3 Conventional Hood

Examples – Flat Front Hood, Thin Wall Hood

Description

A conventional hood is a ventilated bench mounted enclosure that exhibits a square entry profile, and usually lacks a bypass, and airfoil.

Purpose or Application

Used primarily in educational laboratories to control nuisance contaminants or small, microscale experiments.

Reference Organization

None

Testing Recommendations

A conventional hood may be tested to the ASHRAE 110-1995 (or most current edition) test if the hood is large enough to contain the apparatus and a sash is apparent. If not, evaluate containment by modifying the test methods or by smoke visualization. The manufacturer should make recommendations for the specific testing of this product including a velocity profile, smoke visualization, and a filter integrity test if a filter is part of the system.

Additional Comments

This product should be used with caution. Contact your Chemical Hygiene Officer for the proper application, set-up and use of a conventional hood.

8.1.3.4 Balance Enclosure Description

A balance enclosure is a ventilated enclosure designed to specifically house a laboratory balance. These enclosures require good visibility and are typically made of transparent materials such as acrylic, polycarbonate, or glass. Balance enclosures should include baffles, tapers, slots or airfoils to reduce turbulent airflow. Access to the balance enclosure is usually from the sides; however, other access depends upon the accessibility needs.

Purpose or Application

Exposure to fumes from a balance is usually low; however, the proximity of the user's breathing zone to the use of a balance could result in unacceptable exposure levels. It is best to house the balance in a ventilated enclosure. Balance enclosures are designed to protect users and the laboratory environment by directing the airflow away from the breathing zone of the user and exhausting the contaminated air out of the room.

Reference Organization

None

Testing Recommendations

The manufacturer should provide testing data and make recommendations for the specific testing of this product including a velocity profile, smoke visualization, and a filter integrity test if a filter is part of the system.
Additional Comments

None

8.1.3.5 Microscope Enclosure Description

A microscope enclosure is a ventilated enclosure designed to specifically house a laboratory microscope and to provide adequate protection

© SEFA - 5th Edition Desk Reference - Version 3.0

to the user of the microscope. These enclosures require good visibility and are typically made of transparent materials such as acrylic, polycarbonate, or glass. Microscope enclosures should include baffles, tapers, slots or airfoils to reduce turbulent airflow. Access to the microscope enclosure is usually from the front and/or sides and should provide sufficient room for the user to perform necessary operations comfortably. Individual designs vary with the size and style of the microscope and application.

Purpose or Application

Exposure to fumes from a microscope is usually low; however, the proximity of the user's breathing zone to the use of a microscope could result in unacceptable exposure levels. It is best to house the microscope in a ventilated enclosure. Microscope enclosures are designed to protect users and the laboratory environment by directing the airflow away from the breathing zone of the user and exhausting the contaminated air out of the room.

Reference Organization

None

Testing Recommendations

The manufacturer should provide testing data and make recommendations for the specific testing of this product including a velocity profile, smoke visualization, and a filter integrity test if a filter is part of the system.

Additional Comments

Provisions may be necessary to allow electrical connection of the microscope. Proper care must be exercised to avoid a spark within the chamber, which may contain flammable effluents.

8.1.3.6 Robotic Enclosure Description

A robotic enclosure is a ventilated enclosure designed to specifically house a laboratory robot or automated equipment and to provide adequate protection to the laboratory personnel near the robot. Robotic enclosures are typically made of transparent materials such as acrylic, polycarbonate, or glass. Robotic enclosures may or may not have a baffle system. Individual designs vary with the size and style of the robotic equipment and application.

Purpose or Application

Exposure to fumes from a robot is usually low; however, the proximity of the user's breathing zone to the use of a robot could result in unacceptable exposure levels. It is best to house the
robot in a ventilated enclosure. Robotic enclosures are designed to protect users and the laboratory environment by directing the airflow away from the breathing zone of the user and exhausting the contaminated air out of the room.

Reference Organization

None

Testing Recommendations

The manufacturer should provide testing data and make recommendations for the specific testing of this product including a velocity profile, smoke visualization, and a filter integrity test if a filter is part of the system.

Additional Comments

Proper care must be exercised to avoid a spark within the chamber, which may contain flammable effluents.

8.1.3.7 Histopathological Enclosures

Examples – Autopsy, Necropsy Enclosures, Tissue Trimming Enclosures, Tissue Staining, Fixing, Embedding Enclosures

Description

A histopathological enclosure is a hood specifically designed to enclose histopathogical operations such as autopsy, necropsy, tissue trimming, tissue staining, fixing, slide and sample preparation. A histopathological enclosure shall provide adequate protection to the user and

to the laboratory personnel. Histopathogical enclosures are typically made of transparent materials such as acrylic, polycarbonate, or glass. Histopathological enclosures usually have a baffle system. Individual designs vary with the equipment and application.

Purpose or Application

Histopathological enclosures are used to protect the users and their environment from potentially hazardous and noxious aerosols that may be present or formed during the histopathological operation. The histopathological enclosure shall exhaust the contaminated air out of the room and away from laboratory personnel.

Reference Organization

None

Testing Recommendations

The manufacturer should provide testing data and make recommendations for the specific testing of this product including a velocity profile, smoke visualization, and a filter integrity test if a filter is part of the system.

Additional Comments

Proper care must be exercised to avoid a spark within the chamber, which may contain flammable effluents.

8.2 Local Exhaust Ventilation

8.2.1 Canopy Hood Description

A canopy hood is a ventilated enclosure suspended directly above the work area.

Purpose of Application

Canopy hoods are receiving hoods. As such a canopy hood shall be used when there is a force, such as heat, to deliver the contaminant to the receiving hood.

Reference Organization

See the Industrial Ventilation Manual for further details. (Industrial Ventilation: A Manual of Recommended Practice, 25th Edition, or most current edition, American Conference of Governmental Industrial Hygienists, 1330 Kemper Meadow Drive, Cincinnati, OH 45240 www.acgih.org)

Testing Recommendations

The manufacturer should make recommendations for the specific testing of this product including a velocity profile, smoke visualization.

Additional Comments

A canopy hood must be positioned to receive the contaminant. Proximity to the delivering source must be considered when using a canopy hood. Contact your Chemical Hygiene Officer for the proper positioning and use of a canopy hood.

8.2.2 Slot Hood Description

A slot hood is a local exhaust ventilation device that is positioned adjacent and at a right angle to the work area.

Purpose or Application

A slot hood is used only for the removal of nuisance vapors or particulate. A slot hood is preferred to a canopy hood when the nuisance vapor is at room temperature.

Reference Organization

None

Testing Recommendations

Contact your Chemical Hygiene Officer for proper use of a slot hood. The manufacturer should make recommendations for the specific testing of this product including exhaust volume and smoke visualization.

Additional Comments

A slot hood must be positioned to receive the contaminant. Proximity to the delivering source must be considered when using a slot hood. Contact your Chemical Hygiene Officer for the

© SEFA - 5th Edition Desk Reference - Version 3.0

proper positioning and use of a slot hood.

8.2.3 Snorkel

Examples – Elephant Trunk, Spot Collector, Extractor

Description

A small, localized ventilation hood usually connected by flexible duct to an exhaust fan.

Purpose or Application

Snorkel hoods are used for ventilating laboratory equipment and heat or nuisance vapor exhaust only.

Reference Organization

None

Testing Recommendations

Contact your Chemical Hygiene Officer for proper use of a snorkel hood. The manufacturer should make recommendations for the specific testing of this product including a exhaust volume, and smoke visualization

Additional Comments

A snorkel hood has an effective capture range of about one hood diameter away from the hood. Do not use a snorkel hood for anything but heat or nuisance vapor removal unless otherwise certified by your Chemical Hygiene Officer.

8.3 Exhausted Laminar Flow Hoods

Examples: Clean Hoods, Class 10 Fume Hoods, Clean Air Chemical Hoods, Trace Metals Analysis Hoods, Push/Pull Hoods.

Description

An exhausted laminar flow (ELF) hood is one that is designed for critical operations where both a clean air (class 10+) process environment is necessary, along with adequate protection to the user, from fumes and particles. ELF hoods are ventilated cabinets, which contain an integral HEPA/ULPA filtered supply air source. ELF hoods are usually 100% outside ducted, but may be recirculated in cases where particle entrapment is the principle objective. ELF hoods contain vertically closing sashes, baffle systems and often localized exhaust systems within the unit.

Purpose or Application

ELF hoods are used to protect operators from potentially hazardous fumes, typically associated with acid digestion or solvent parts cleaning, while creating clean environmental conditions required for these types of critical processes.

Reference Organization

ISO 14644-1, ISO 14644-7 and ASHRAE 110-1995.

Testing Recommendations

Because ELF hoods are hybrids between negative and positive pressure environments, strict attention to balance testing is crucial. Testing to be done against ASHRAE 110-1995 and ISO 14644-21 or most current versions.

Additional Comments

ELF hoods are often constructed in corrosion resistant materials, such as polypropylene, because of the harsh conditions often present within these critical processing environments. Further, clean room compatible materials often dictate non-shedding materials of construction. Finally, various critical processes, such as trace metals analysis, require metal-free environments, due to data collection concerns.

8.4 Biological Safety Cabinets

8.4.1 Class I Cabinets

Description

A ventilated cabinet that provides personnel and environmental protection. It is characterized by an unrecirculated inward flow of air away from the operator through a limited fixed access opening. Exhaust air must be HEPA filtered if recirculated back into the laboratory. It may or may not be vented via a remote ventilation system. This cabinet does not offer product protection.

Purpose or Application

Personnel and environmental protection.

Reference Organization

NSF International provides some information in NSF Standard 49. (See: NSF49-2002 Class II (Laminar Flow) Biohazard Cabinetry, NSF International)

Testing Recommendations

None

Additional Comments

There are no nationally recognized specifications/ standards governing construction and performance for these configurations.

8.4.2 Class II Cabinets

Description

A ventilated cabinet that provides personnel, product and environmental protection. It is characterized by a limited fixed inward airflow access opening that provides personnel protection, a vertical downward HEPA filtered work zone that provides product protection and HEPA filtered exhaust providing environmental protection. They are divided into types by NSF and identified in Standard 49.

- **Class II Type A1 cabinets (Formerly designated Type A)**

  Minimum of 75 FPM (.36m/s) inflow. HEPA filtered down flow mixed with recycled air.

  May exhaust some or all HEPA filtered air back into the laboratory.

  May have positive pressure duct systems.

- **Class II Type A2 Cabinets (Formerly designated Type B3)**

  Minimum of 100 FPM (0.5m/s) inflow. HEPA filtered down flow mixed with recycled air.

  May exhaust some or all HEPA filtered air back into the laboratory.

  Has negative pressure duct systems.

- **Class II Type B1 Cabinets**

  Minimum of 100 FPM (.5m/s) inflow.

  HEPA filtered, largely uncontaminated recirculated air.

  Exhausts most contaminated air to atmosphere through a dedicated duct system.

  Has negative pressure duct system or surrounded by a negative pressure duct system.

- **Class II Type B2 Cabinet (Total Exhaust)**

  Minimum of 100 FPM (.5m/s) inflow.

  HEPA filtered, non-recirculated, down flow air.

  HEPA filtered exhaust air to atmosphere.

  Has negative pressure duct system or surrounded by a negative pressure duct system.

Purpose or Application

Refer to the Center for Disease Control (CDC) and the National Institute of Health (NIH) for application information. (Center for Disease Control and Prevention, 1600 Clifton Rd. Atlanta, GA 30333 www.cdc.gov, National Institutes of Health, Bethesda, MD, 20892 www.nih.gov)

Reference Organization

NSF International Standard No. 49.

Testing Recommendations

Construction and Performance Specifications for Class II cabinets are defined by the NSF International Standard No. 49.

© SEFA - 5th Edition Desk Reference - Version 3.0

Additional Comments

None

8.4.3 Class III Cabinets

Examples: Glove Box

Description

Provides absolute personnel protection, environmental protection and may provide product protection. It is characterized by a totally enclosed, gas-tight, negative pressure, HEPA filtered, ventilated workspace accessed through attached rubber gloves and purged interchange chambers. Exhaust air is treated by double HEPA filtration and/or incineration.

Purpose or Application

Reference Organization

The American Glove Box Society. (The American Glove Box society is a relevant organization an is listed in section 11.0 of this document.

Testing Recommendations

None

Additional Comments

There are no nationally recognized specifications/ standards governing construction and performance for these configurations. Some additional information can be found in NSF Standard 49.

8.5 Ductless Hoods

(See: SEFA 9-2010 Recommended Practices for Ductless Enclosures)

A ductless hood recirculates air back into the laboratory from the hood chamber.

Examples: Ductless Fume Hoods, Ductless Fume Cabinets

Description

A ductless hood is an open faced enclosure designed to protect the user from laboratory

and industrial airborne contaminates, similar to a laboratory fume hood, but is not connected to a duct system (although options are available for connecting to a duct system). Instead, the air is recirculated back to the room atmosphere. The ductless hood's scope of use is limited to the capacity and capability of the filtration system. The objective of the filtration system is to reduce the levels of solids, gaseous or vapor constituent to that below the acceptable TLV limit at the exhaust.

The benefits of a ductless hood include:
Low installation cost
Portability
No permit for exhausting outside the building

Reference Organization

(USA) SEFA 9-2010;

ANSI/AIHA Z9.5-2000 or most current version, Proposed Performance Standard section on Ductless Fume Hoods.

(Canada) CAN CSA Z316.5 Performance Standard.

(France) AFNOR NFX 15-211 Performance Standard.

(England) BSI Specification for recirculatory filtration fume cupboards.

(Germany) DIN 12927 Laboratory Furniture – Ductless filtering fume enclosures.

(Australia) AS2243.9 Approved Code of Practice on Safety in Laboratories - Recirculating Fume Cabinets (Ductless Fume Cabinets)

9.0 Terms and Definitions

A&E – The "Architect and Engineer." Generic term refers to designers of laboratory building and ventilation systems.

ACFM – Actual cubic feet per minute of gas opening.

ACGIH – The American Conference of Governmental Industrial Hygienists; association supports or produces TLV list, Industrial Ventilation Manual, bioaerosol documents.

ACH, AC/H (air changes per hour), N – The number of times air is theoretically replaced during an hour.

Acceptable Indoor Air Quality – Air in which there are no known contaminants at harmful levels as determined by appropriate authorities and air with which 80% or more of the people do not express dissatisfaction.

Access Opening – That part of the fume hood through which work is performed; sash or face opening.

Air Flow Monitor — Device installed in a fume hood to monitor the airflow through the fume chamber of a fume hood

Air Foil — A horizontal member across the lower part of the fume hood sash opening. Shaped to provide a smooth airflow into the chamber across the worksurface.

Air Volume — Quantity of air expressed in cubic feet (ft3) or cubic meters (m3).

Auxiliary Air — Supply or supplemental air delivered to a laboratory fume hood to reduce room air consumption.

Baffle — Panel located across the rear wall of the fume hood chamber interior and directs the airflow through the fume chamber.

Bench Hood – A fume hood that is located on a work surface. (See superstructure)

Bypass – Compensating opening in a fume hood that functions to limit the maximum face velocity as the sash is raised or lowered.

Combination Hood – A fume hood assembly containing a bench hood section and a floor mounted section.

Combination Sash – A fume hood sash with a framed member that moves vertically housing two or more horizontal sliding transparent viewing panels.

Counter Top – (See Work surface)

Cross Drafts – Air draft that flows parallel to or across the face opening of the fume hood.

Damper – Device installed in a duct to control airflow volume.

Diversity – Operating a system at less capacity than the sum of peak demand (ANSI Z9.5)

Duct – Round, square or rectangular tube used to enclose moving air.

Duct Velocity – Speed of air moving in a duct, usually expressed in feet per minute (fpm) or meters per second (mps).

Exhaust Collar – Connection between duct and fume hood through which all exhaust air passes.

Exhaust Unit – Air moving device, sometimes called a fan, consisting of a motor, impeller and housing.

Face – Front access or sash opening of laboratory fume hood. Face opening measured in width and height. See sash or access opening.

Face Velocity – Average speed of air flowing perpendicular to the face opening and into the fume chamber of the fume hood and expressed in feet per minute (fpm), measured at the plane of the face or sash opening.

Fan – Air moving device, usually called an exhaust unit, consisting of a motor, impeller and housing.

Fan Curve – A curve relating pressure vs. volume flow rate of a given fan at a fixed fan speed (rpm).

Filter – Device to remove particles from air.
Friction Loss – The static pressure loss in a system due to friction between moving air and the duct wall; expressed as inches w. g. 100 feet, or fractions of VP per 100 feet of duct.

© SEFA - 5th Edition Desk Reference - Version 3.0

Fume Chamber – The interior of the fume hood measured width, depth and height constructed of material suitable for intended use.

Fume Cupboard – British term for laboratory fume hood.

Fume Removal System – A fume hood exhaust engineered to effectively move air and fumes consistently through fume hood, duct and exhaust unit.

Gauge Pressure – The difference between two absolute pressures, one of which is usually atmospheric pressure; mainly measured in inches water gauge (in. w. g.).

Glove Box – Total enclosure used to confine and contain hazardous materials with operator access by means of gloved portals or other limited openings; this device is not a laboratory fume hood.

Grille – A louvered or perforated face over an opening in an HVAC system.

Hood - A device which encloses, captures, or receives emitted contaminants.

Hood Entry Loss – The static pressure loss, stated in inches w. g., when air enters a duct through a hood. The majority of the loss is usually associated with a vena contracta formed in the duct.

Hood Static Pressure – The sum of the duct velocity pressure and the hood entry loss; it is the static pressure required to accelerate air at rest outside the hood into the duct at duct velocity.

HVAC – Heating Ventilating and Air Conditioning. Ventilation systems designed primarily for temperature, humidity, odor control, and air quality.

Inches of Water (inch w.g.) – The pressure exerted by a column of water one inch in height at a defined reference condition such as 39°F or 4°C and the standard acceleration of gravity.

Indoor Air Quality (IAQ) – The study, evaluation, and control of indoor air quality related to temperature, humidity, and airborne contaminants.

Industrial Ventilation (IV) – The equipment or operation associated with the supply or exhaust of air, by natural or mechanical means, to control occupational hazards in the industrial setting.

Laboratory – The net assignable area in which diverse mechanical services and special ventilation systems are available to control emissions and exposures from chemical operations.

Laboratory Fume Hood – See definition in Section 3.0.

Laboratory Module – A basic unit of space usually accommodating a two person laboratory operation.

Laboratory Ventilation – Air moving systems and equipment which serve laboratories.

Laminar Flow (Also Streamline Flow) – Airflow in which air molecules travel parallel to all other molecules; flow characterized by the absence of turbulence.

Laminar Flow Cabinet – Name applied to clean bench or biological enclosures. This device is not a laboratory fume hood.

Liner – Interior lining used for side, back and top enclosure panels, exhaust plenum and baffle system of a laboratory fume hood.

Local Exhaust Ventilation – An industrial ventilation system that captures and removes emitted contaminants before dilution into the workplace ambient air can occur.

Loss - Usually refers to the conversion of static pressure to heat in components of the ventilation system, viz., "the hood entry loss."

Low Flow Laboratory Fume Hoods – Fume Hood designs that provide a reduction in the required exhaust air volume, when compared to the volume required for the same size fume hood to operate with a face velocity of 100 FPM through a fully opened vertical sash.

Low Velocity Laboratory Fume Hoods – Fume Hood designs that provide a reduction in the required exhaust air volume, when compared to the volume required for the same size fume hood to operate with a face velocity of 100 FPM through a fully opened vertical sash and provides containment levels equivalent or superior to ASHRAE 110 tracer gas test ratings of 4.0 AM 0.05, and 4.0 AI/AU 0.10, with a face velocity of 70 FPM or less through the fully opened vertical sash. Low Velocity Fume Hoods are also referred to as High Performance Fume Hoods and High Efficiency Fume Hoods.

Make-up Air – (See Replacement and Compensating Air). Air needed to replace the air taken from the room by laboratory fume hood(s) and other air exhausting devices.

Manometer – A device which measures pressure difference; usually a u-shaped glass tube containing water or mercury.

Microorganism – A microscopic organism, usually a bacterium, fungus, or protozoan.

Minimum Transport Velocity (MTV) – The minimum velocity which will transport particles in a duct with little settling; the MTV varies with air density, particulate loading, and other factors.

Natural Ventilation – The movement of outdoor air into a space through intentionally provided openings, such as windows, doors, or other non-powered ventilators, or by infiltration.

Occupied Zone – The region within an occupied space between 3" and 72" above the floor and more than two feet from the walls for fixed air conditioning equipment. (From ASHRAE Standard 55-1981).

Odor – A quality of gases, vapors, or particles which stimulates the olfactory organs; typically unpleasant or objectionable.

Outdoor Air (OA) – "Fresh" air mixed with return air (RA) to dilute contaminants in the supply air (SA).

Particulate Matter – For thess Recommended Practices, small lightweight particles that will be airborne in low-velocity air [approximately 50 fpm (.25m/s)].

Pitot Tube – A device used to measure total and static pressures in an air stream.

Plenum - A low velocity chamber used to distribute static pressure throughout its interior.

Plenum Chamber – Chamber used to equalize airflow.

Pressure Drop – The loss of static pressure between two points; for example, "The pressure drop across an orifice is 2.0 inches w.g."

Register – A combination grille and damper assembly.

Relative Humidity (RH) – The ratio of water vapor in air to the amount of water vapor air can hold at saturation. A "RH" of 100% is about 2.5% water vapor in air, by volume.

Replacement Air – (Also, compensating air, make-up air) Air supplied to a space to replace exhausted air.

Respirable Particles – Those particles in air which penetrate into and are deposited in the nonciliated portion of the lung.

Return Air – Air which is returned from the primary space to the fan for recirculation.
Room Air – That portion of the exhaust air taken from the room.

SCFM (Standard Cubic Feet Per Minute) – Airflow rate at standard conditions; dry air at 29.92 inches Hg gauge, 70 degrees F.

Sash – A moveable panel or door set in the access opening/hood entrance to form a protective shield and to control the face velocity of air into the hood.

Scrubber, Fume – A device used to remove contaminants from fume hood exhaust, normally utilizing water.

Service Fixture – Item of laboratory plumbing mounted on or fastened to laboratory fume hood.

© SEFA - 5th Edition Desk Reference - Version 3.0

Sulfur Hexafluoride (SF6) - Tracer gas widely used for ASHRAE testing.

Slot Velocity – The average velocity of air through a slot. It is calculated by dividing the total volume flow by the slot area; usually vs = 2,000 fpm.

Smoke Candle – Smoke producing device used to allow visual observation of airflow.

Spot Collector – A small, localized ventilation hood usually connected by a flexible duct to an exhaust fan. This device is not a laboratory fume hood.

Stack – The device on the end of a ventilation system, which disperses exhaust contaminates for dilution by the atmosphere.

Standard Air — Standard Conditions STP Dry air at 70 degrees F, 29.92 in Hg.

Static Pressure (SP) – The pressure developed in a duct by a fan; SP exerts influence in all directions; the force in inches of water measured perpendicular to flow at the wall of the duct; the difference in pressure between atmospheric pressure and the absolute pressure inside a duct, cleaner, or other equipment.

Static Pressure Loss – Measurement of resistance created when air moves through a duct or hood, usually expressed in inches of water.

Suction Pressure – See Static Pressure (Archaic. Refers to static pressure on upstream side of fan.)

Superstructure – That portion of a laboratory fume hood that is supported by the work surface.

Supplemental Air – Supply or auxiliary air delivered to a laboratory fume hood to reduce room air consumption.

Thermal Anemometer – A device for measuring fume hood face velocity utilizing the principle of thermal cooling of a heated element as the detection element.

Threshold Limit Value – Time Weighted Average (TLV-TWA) – The time weighted average concentration for a normal 8-hour workday or 40-hour work week, to which nearly all workers may be repeatedly exposed, day after day, without adverse effect.

Titanium Tetrachloride – Chemical that generates white fumes used in testing laboratory fume hoods.

Total Pressure (TP) - The pressure exerted in a duct as the sum of the static pressure and the velocity pressure.

Total Suspended Particulate Matter – The mass of particles suspended in a unit volume of air (typically one cubic meter) when collected by a high-volume sampler.

Transport Velocity – Minimum speed of air required to support and carry particles in an air stream.

Turbulent Flow – Airflow characterized by transverse velocity components, as well as velocity in the primary direction of flow in a duct; mixing velocities.

TWA (Time Weighted Average) – The average exposure at the breathing zone.

Variable Air Volume (VAV) – In HVAC system, the supply air volume is varied by dampers or fan speed controls to maintain the temperature; in hoods, the exhaust air is varied to reduce the amount of air exhausted.

Velocity Pressure – Pressure caused by moving air in a laboratory fume hood or duct, usually expressed in inches of water.

Velocity (V) – The time rate of movement of air; feet per minute.

Volume Flow Rate (Q) –The quantity of air flowing in cubic feet per minute, cfm, scfm, acfm.

Work Space – The part of the fume hood interior where apparatus is set up and fumes are generated. It is normally confined to a space extending from six inches (15.2 cm) behind the plane of the sash(es) to the face of the baffle, and extending from the work surface to a plane parallel with the top edge of the access opening.

Work Surface – The surface that a laboratory fume hood is located on and supported by a base cabinet. In the fume chamber, the surface is recessed to contain spills.

10.0 Basic Calculations

An excellent source for engineering principles of ventilation can be found in Industrial Ventilation, a manual of recommended practice. This manual is prepared by the American Conference of Governmental Industrial Hygienists.
The manual (27th Edition) is available for purchase from the ACGIH website acgih.org. It highlights the general principles of ventilation (including basic calculation) supply systems, exhaust systems, principles of airflow, fans, construction guidelines, and testing of ventilation systems.

This manual should be used in concert with the SEFA Recommended Practices.

11.0 Relevant Organizations

SEFA recognizes and acknowledges the importance of government agencies that produce documents concerning laboratory ventilation, laboratory fume hoods and laboratory safety. These agencies include:

AABC Associated Air Balance Council
1000 Vermont Avenue, NW
Washington, DC 20001
www.aabc.com

ACGIH American Conference of
Governmental Industrial Hygienists
1330 Kemper Meadow Drive
Cincinnati, Ohio 45240
www.acgih.org
http://www.acgih.org
(513) 742-2020

ADC Air Diffusion Council
230 North Michigan Avenue
Chicago, IL 60601
www.flexibleduct.org

AGA American Gas Association
1515 Wilson Blvd.
Arlington, VA 22209
www.aga.com

AGC Associated General Contractors of America
1957 E. Street, NW
Washington, DC 20006
www.agc.org

AGS American Glove Box Society
P. O. BoX 9099
Santa Rosa, CA 95405
www.gloveboxsociety.org
(800) 530-1022

AHA American Hardboard Association
1210 W. Northwest Highway
Palatine, IL 60067-1897
www.domensino.com/aha/
(847) 934-8800

AIA The American Institute of Architects
1735 New York Avenue, NW
Washington, DC 20006-5292
www.aia.org
(202) 626-7300

AIHA American Industrial Hygiene Association
2700 Prosperity Ave., Suite 250
Fairfax, VA 22031
www.aiha.org
(703) 849-8888

AMCA Air Movement & Control Association
International, Inc.
30 W. University Drive
Arlington Heights, IL 60004-1893
www.amca.org
(847) 394-0150

ANSI American National Standards Institute
11 West 42nd Street 13th Floor
New York, NY 10036-8002
www.ansi.org
(888) 267-4683
(212) 642-4900

© SEFA - 5th Edition Desk Reference - Version 3.0

AHRI Air Conditioning, Heating, and Refrigeration Institute
4301 Fairfax Drive, Suite 425
Arlington, VA 22203
www.ari.org
(703) 524-8800

ASCE American Society of Civil Engineers World Headquarters
1801 Alexander Graham Bell Drive
Reston, VA 20191-4400
www.asce.org
(800) 548-2723
(703) 295-6000

ASCET American Society of Certified Engineering Technicians
P. O. Box 1348
Flowery Branch, GA 30548
Www.ascet.org
(777) 967-9173

ASHRAE American Society of Heating, Refrigerating and Air Conditioning Engineers
1791 Tullie Circle, NE
Atlanta, GA 30329-2305
www.ashrae.org
(800) 527-4723
(404) 636-8400

ASME American Society of Mech. Eng.
345 East 47th Street
New York, NY 10017-2392
www.asme.org
(800) 843-2763 (US and Canada)
011-(800)-843-2763 (Mexico)
(973)822-1170 (Outside NA)

ASPE American Society of Plumbing Engineers
3617 Thousand Oaks Blvd., Suite 210
Westlake Village, CA 91362-3649
www.aspe.org
(805) 495-7120

ASSE American Society of Sanitary Engineering
28901 Clemens Road
Westlake, OH 44145
www.asse-plumbing.org
(440) 835-3040

ASTM American Soc of Testing & Materials
100 Barr Harbor Drive
West Conshohocken, PA 19428-2959
www.astm.org
(610) 832-9500

BSI British Standards Institution
389 Chiswick High Road
London W4 4AL United Kingdom
www.bsi-global.com
+44 (0)20 8996 9000

CALOSHA California Division of Occupational Safety and Health
455 Golden Gate Avenue 10th Floor
San Francisco, CA 94102
www.dir.ca.gov/dosh
(800) 963-9424— (916) 274-5721

CDC Center for Disease Control and Prevention
1600 Clifton Road
Atlanta, GA 30333
www.cdc.gov
(404) 639-3311

CSI Construction Specification Institute
99 Canal Center Plaza, Suite 300
Alexandria, VA 22314
www.csinet.org
(800) 689-2900

CETA Controlled Environmental Testing Association
1500 Sunday Drive, Suite 102
Raleigh, NC 27607
www.cetainternational.org

CSA Canadian Standards Association
5060 Spectrumway, Suite 100
Mississauga, Ontario L4W 5N6
www.csa.ca
(800) 463-6727

DIN German National Standard
DIN Deutsches Institut füür Normung e. V.
10772 Berlin, Germany
www.din.de

EJCDC Engineers' Joint Contract Documents Committee
American Consulting Engineers Council
1015 15th Street, NW
Washington, DC 20005
www.ejc.org

EPA Environmental Protection Agency
401 M Street, SW
Washington, DC 20460
www.epa.gov
(202) 260-2090

FM Factory Mutual System
1151 Boston-Providence Turnpike
P. O. Box 9102
Norwood, MA 02062-9102
www.factorymutual.com
(781) 762-4300

FS Federal Specifications
General Service Administration
Specifications and Consumer Information
Distribution Center (WFSIS)
Washington Navy Yard Building 197
Washington, DC 20407
http://apps.fas.gsa.gov

IBC International Conference of Building Officials
5360 Workman Mill Road
Whittier, CA 90601-2298
www.icbo.org
(800) 423-6587

IEEE Institute of Electrical and Electronics Engineers
345 E. 47th Street
New York, NY 10017-2394
www.ieee.org
(800) 678-4333
(212) 705-7900

ISA Instrumentation, Systems, and Automation Society
67 Alexander Drive
Research Triangle Park, NC 27709
www.isa.org
(919) 549-8411

ISO Int'l Organization for Standardization
Case Postal 56 - 1, ch. de la Voie-Creuse,
Case postale 56
CH-1211 Geneva 20, Switzerland
www.iso.org
+41 22 749 01 11

MCAA Mechanical Contractors Association of America
1385 Piccard Drive
Rockville, MD 20850-4329
www.mcas.org
(301) 869-5800

MSS Manufacturers Standardization Society of the Valve and Fittings Industry
127 Park Street, NE
Vienna, VA 22180-4602
www.mss-hq.com
(703) 281-6613

NEBB National Environmental Balancing Bureau
8575 Grovemont Circle
Gaithersburg, MD 20877
www.nebb.org
301-977-3698

NEC National Electrical Code
One Batterymarch Park
P. O. Box 9101
Quincy, MA 02269-9101
www.nfpa.org

NEMA National Electrical Manufacturers Association
1300 N. 17th Street, Suite 1847
Rosslyn, VA 22209
www.nema.org
(703) 841-3200

NFPA National Fire Protection Association
One Batterymarch Park
P. O. Box 9101
Quincy, MA 02269-9101
www.nfpa.org
(800) 344-3555—(617) 770-3000

NIH National Institute of Health
Bethesda, Maryland 20892
www.nih.gov

© SEFA - 5th Edition Desk Reference - Version 3.0

NSPE National Society of Professional Engineers
1420 King Street
Alexandria, VA 22314
(703) 684-2800

NSF NSF International
789 North Dixboro Road
Ann Arbor, MI 48105
www.nsf.org
(734) 769-8010

OSHA Occupational Safety and Health Administration
U.S. Department of Labor
200 Constitution Avenue, NW
Washington, DC 20201
www.osha.gov
(202) 219-8148

PDI Plumbing and Drainage Institute
45 Bristol Drive, Suite 101
South Easton, MA 02375
www.pdi-online.org
(800) 589-8956
(508) 230-3516

SMACNA Sheet Metal & Air Conditioning Contractors'
National Association
4201 Lafayette Center Drive
P. O. Box 221230
Chantilly, VA 20151-1209
www.smacna.org
(703) 803-2980

UL Underwriters Laboratories Inc.
333 Pfingsten Road
Northbrook, IL 60062
www.ul.com
(800) 704-4050
(847) 272-8800

12.0 Regulatory and Industry Consensus Standards

The potential for chemical exposure of personnel in laboratories has resulted in the promulgation of a wide variety of standards for ensuring proper operation of laboratory fume hood systems. The requirements and value of the information contained in the different standards will vary depending on your responsibilities.

A few of the relevant standards are briefly described below.

12.1 (ACGIH) American Conference of Governmental Industrial Hygienists

The ACGIH produces a wide variety of useful literature; however, two particularly useful guides are the Threshold Limit Values for Chemical Substances and Physical Agents and Biological Exposure Indices (TLV Guide) and the Industrial Ventilation: A Manual of Recommended Practice. The TLV Guide provides an excellent source of guidelines to assist with control of occupational hazards.

The Industrial Ventilation Manual provides one of the best sources of information on hood and ventilation system design.

(ACGIH) Industrial Ventilation (24th Edition)
p. 10-40 "Supply Air Distribution – For typical operations at a laboratory fume hood, the worker stands at the face of the hood and manipulates the apparatus in the hood. The indraft at the hood face creates eddy currents around the worker's body, which can drag contaminants in the hood back to the body and up to the breathing zone. The higher the face velocity, the greater the eddy currents. For this reason, higher face velocities do not result in as much greater protection as might be supposed."

p. 10-40
"Selection of Hood Face Velocity – The interaction of supply air distribution and hood face velocity makes any blanket specification of hood face velocity inappropriate. Higher hood face velocities will be wasteful of energy and may provide no better or even poorer worker protection."

"For projected new building, it is frequently necessary to estimate the cost of air conditioning early, before the detailed design and equipment specification are available. For that early estimating, the following guidelines can be used. Hoods near doors are acceptable if 1) there is a

second safe egress from the room, 2) traffic past hood is low, and 3) door is normally open.

12.2 ANSI/AIHA Z9.5 – 1992

The American National Standards Institute (ANSI) published Z9.5 An American National Standard for Laboratory Ventilation, "to provide guidance in the selection, design, operation and use of laboratory ventilation system."

This standard is best suited for health and safety and engineering personnel responsible for ensuring proper use and design oflaboratory fume hood systems.

The standard provides non-regulatory guidelines and recommendations.

Condition	CFM/Sq. Ft. Open Hood Face
Ceiling panels properly located with average panel face velocity <40 fpm. Horizontal-sliding sash hoods. No equipment in hood closer than 12 inches to face of hood. Hoods located away from doors and traffic ways.	60
Same as above; some traffic past hoods. No equipment in hoods closer than six inches to face of hood. Hoods located away from doors and traffic ways.	80
Ceiling panels properly located with average panel face velocity <60 fpm or ceiling diffusers properly located; no diffuser immediately in front of hoods, quadrant facing hood blocked, terminal throw velocity <60 fpm. No equipment in hood closer than six inches to face of hood. Hoods located away from doors or traffic ways.	80
Same as three above; some traffic past hoods. No equipment in hoods closer than six inches to face of hood.	100

It is the responsibility of an organization to determine the applicability of the recommendations.

A few of the recommendations include:

Develop a Laboratory Ventilation Management Program (LVMP). The program should include specific procedures for ensuring proper selection, design, operation, maintenance and use of laboratory fume hood systems.

Designate a cognizant person to administer the LVMP. Maintain Permanent Records of Performance.

Conduct initial and routine system performance tests.

The ASHRAE 110 Test is the preferred test for initial evaluation of performance.

Routine performance tests should be conducted at least annually or whenever a significant change in the hood system occurs.

New and renovated hoods must be equipped with flow measurement devices.

Supply air velocities (cross drafts) should be limited to less then 50% of target face velocity near hood openings.

The ductwork must be compatible with chemical effluents, sized to ensure 2,000 fpm duct velocities and designed to ensure safe transport and exhaust of materials generated in the hood. All ducts should be under negative pressure within the building.

The sound pressure level of noise should be limited at worker locations to below 85 dBA. Room noise should be limited to below a noise criterial curve rating of 55 dBA.

The catastrophic potential of each laboratory should be determined.

Lab personnel should be trained in proper work practices.

Further recommendations are provided for design and use of bypass fume hoods, VAV hoods, auxiliary air hoods, floor mounted hoods, perchloric acid hoods, and glove boxes.

© SEFA - 5th Edition Desk Reference - Version 3.0

ANSI /AIHA Z9.5 Committee issued a clarification letter to address this topic:

p. 1 – 3
Discourage the use of a numerical pressure differential between rooms as a basis for design. Although it is true that the difference in pressure is the driving force that causes airflow through any openings from one room to another, specifying quantitative pressure differential is a poor basis for design. What is really desired is an offset air volume. Attempts to design using direct pressure differential measurement and control vs. controlling the offset volume results in either short or extended periods of the loss of pressure when the doors are open or excessive pressure differentials when doors are closed, sufficient to affect the performance of low pressure fans. The direct pressure control systems are also hard to stabilize, and can cause building pressure problems and result in excessively large volume offsets in porous rooms. The need to maintain directional airflow at every instant and the magnitude of airflow needed will depend on individual circumstances. For example, "clean" rooms may have very strict requirements while teaching laboratories may only need to maintain directional airflow during certain activities or emergency conditions. In the later cases, one would simply use the appropriate offset to maintain directional airflow as needed and operational procedures during emergencies (i.e., close doors during a chemical spill).

The amount of offset should be based on two considerations:

The airflow required to keep the room negative (or in some positive) with regard to surrounding air spaces. The 10% offset suggested in the comments may be appropriate in some cases, but has no general validity.

The required "stringency" of the requirement for direction of airflow into or out of any openings in the walls. If the requirement is stringent, two seldom considered factors become important. First, if there is any appreciable temperature difference between the lab and the adjoining space, when a door is opened there will be a thermal exchange of warmer air flowing in one direction at the top of the doorway, and cooler air flowing in an opposite direction near the floor. An airflow velocity of at least 40 fpm is required to inhibit this exchange under normal conditions, a flow rate of 100 fpm is more positive. If there is no airlock, and if there is a definite but not stringent need for direction of airflow, this phenomenon should be made a design consideration.

For situations less than those requiring stringent control, VAV systems should be adequate. The offset volume should be based on the cfm needed to provide at least 50 cfm, (100 fpm is better) through the doorway opening. The increased offset volume can be operated by a mechanical optical switch at or near the door. The volume of offset air required is not related to the ventilation rate of the laboratory.

12.3 ANSI / ASHRAE 110 – 1995

The American Society of Heating, Refrigeration and Air Conditioning Engineers' ANSI / ASHRAE 110 Method of Testing Performance of Laboratory Fume Hoods provides guidelines to conduct qualitative tests to evaluate hood performance and quantitative tests to measure air velocities and containment capability.

The standard is best suited for persons responsible for ensuring proper operation of laboratory fume hoods, typically health and safety, engineering and maintenance.

The standard provides methods for:

Inspecting the hood and operating environment.

Airflow visualization (smoke tests).

Measurement of face velocity.

Tracer gas containment tests.
Limited evaluation of variable air volume operation.

Suggested tests for evaluating dynamic conditions (worker movement, traffic past the hood, etc.).

The standard also describes three methods of specifying the tests:

"As Manufactured" (AM) Tests - AM tests are

conducted at the manufacturer's facility to evaluate hood design. AM tests enable pre-purchase evaluation of hood performance and provide critical operating specifications required for proper design of laboratory ventilation systems.

"As Installed" (AI) Tests – AI tests are conducted after experimental apparatus have been placed in the hood. The tests are used to determine hood limitations and the need for special work practices.

"As Used (AU) Tests - AU tests verify the function of the hood in the condition that the user has established the hood.

12.4 ASHRAE Handbook Applications 1999

p. 30.10
Face Velocity.
"If the face velocity (design and operation) must be maintained at 100 fpm (0.5/s) + 10%, this average may be allowed to deteriorate to 85 fpm (0.47 m/s) before correction and then the face velocity must be returned to 100 fpm (0.5/s). Individuals reading may not vary more than + 15% with the hood empty or + 25% with research equipment in the hood.

p. 30.5
"All laboratory fume hoods and safety cabinets should be equipped with visual and audible alarms to warn the laboratory workers of unsafe airflows."

p. 13.11
"In order for the laboratory to act as a secondary confinement barrier …, it must be maintained at a slightly negative pressure with respect to adjoining areas to contain odors and fumes. Exceptions are sterile facilities of clean spaces that may need to be maintained at a positive pressure with respect to adjoining spaces."

12.5 NFPA 45, 2000

p. 5-12
"6.4.5. Laboratory fume hood velocities and exhaust volumes shall be sufficient to contain contaminants generated within the hood and exhaust them outside of the laboratory building. The hood shall provide confinement of the possible hazards and protection for personnel at all times when chemicals are present in the hood."

P 45 – 28
Appendix "A-6.4.6. Laboratory fume hood containment can be evaluated using the procedures contained in the ASHRAE 110, Method of Testing Performance of Laboratory Fume Hoods. Face velocities of 0.4 m/sec to 0.6 m/sec (80 fpm to 120 fpm) generally provide containment if the hood location requirements and laboratory ventilation criteria of this standard are met."

p. 45-13
A measuring device for hood airflow shall be provided on each laboratory hood. The measuring device for hood airflow shall be a permanently installed device and shall provide constant indication to the hood user of adequate or inadequate hood airflow.

p. 45 – 12, Sections 6.3.3, 6.4.1
"Laboratory units in which chemicals are present shall be continuously ventilated. Air exhausted from laboratory fume hoods and other special local exhaust systems shall not be recirculated."

Differential pressure control versus volumetric offset – Room pressurization has been approached using two different methods:

Differential pressure control, and Volumetric offset control.

12.6 OSHA 1910.1450

In 1990, The Occupational Safety and Health Administration (OSHA) published 29 CFR Part 1910.1450 Occupational Exposure to Hazardous Chemicals in Laboratories (Federal Register, Volume 55, No. 21 pages 3327-3335). The standard became effective May 1, 1990 and contains a variety of regulatory requirements and recommendations for laboratories.

The law requires that laboratory facilities have a written Chemical Hygiene Plan that ensures protection for laboratory personnel, proper operation of laboratory fume hood systems and

© SEFA - 5th Edition Desk Reference - Version 3.0

training of all laboratory personnel in safe work practices.

Chemical Hygiene Plan (CHP)

With few exceptions, all laboratories must develop a written CHP.

The standard requires designation of a Chemical Hygiene Officer.

The Chemical Hygiene Officer must develop, implement and administer the CHP.

The CHP must be capable of preventing overexposure of laboratory personnel to all potential chemical hazards.

The CHP must be readily available to all employees.

The CHP must include:

Protocols for identifying hazardous procedures.

Standard Operating Procedures for working with hazardous chemicals

Basis for selection of appropriate exposure control methods.

Measures to assure proper functioning of laboratory fume hoods.

Methods to evaluate system operation upon installation and routinely (recommended quarterly).

The standard recommends installation of monitors on all hoods.

Requires training and dissemination of employee information on all potential hazards.

Federal Register – OSHA
p. 3332. Paragraph G, Quality
"…airflow into and within the hood should not be excessively turbulent." (200)
"…hood face velocity should be adequate (typically 60 – 100 lfm)." (200,204)
Note: Reference to page numbers in Prudent Practices for Handling Hazardous Chemicals in Laboratories are given in parenthesis i.e., (200)

p. 484. Paragraph (B) Hoods
"…each hood should have a continuous monitoring device to allow convenient confirmation of adequate hood performance before use (200, 203)."

p. 484
"4. Ventilation … direct air flow into the laboratory from non-laboratory areas and out to the exterior of the building …"

12.7 Prudent Practices

Prudent Practices in the Laboratory: Handling and Disposal of Chemicals (1995), Committee on Prudent Practices for Handling, Storage, and Disposal of Chemicals in Laboratories, National Research Council.

p. 178
"In most cases, the recommended face velocity is between 80 and 100 feet per minute (fpm). Face velocities between 100 and 120 fpm may be used for substances of very high toxicity or where outside influences adversely affect hood performance. However, energy costs to operate the fume hood are directly proportional to the face velocity. Face velocities approaching or exceeding 150 (fpm) should not be used, because they may cause turbulence around the periphery of the sash opening and actually reduce the capture efficiency of the fume hood."

p. 192
"In all cases, air should flow from the offices, corridors, and support spaces into the laboratories. All air from chemical laboratories should be exhausted out-doors and not recirculated. Thus, the air pressure in chemical laboratories should be negative with respect to the rest of the building unless the laboratory is also a clean room."

p. 200
"2. Hoods should be evaluated before use to ensure adequate face velocity (typically 60 – 100 lfm) …and the absence of excessive turbulence…"

p. 203
"If the hood and the general ventilating system

are properly designed, face velocities in the range of 60 –100 fpm will provide a laminar flow of air over the floor and sides of the hood. Higher face velocities (125 fpm or more), which exhaust the general laboratory air at a greater rate, are both wasteful of energy and likely to degrade hood performance by creating air turbulence at the hood face and within the hood. Such air turbulence can cause the vapors within the hood to spill out into the general laboratory atmosphere."

p. 204
"The optimum face velocity of a hood (also called the capture velocity) will vary depending on its configuration. As noted above, too high a face velocity is likely to increase the turbulence within the hood and cause gases or vapors to spill from the hood into the room."

p. 180
"Make sure that a continuous monitoring device for adequate hood performance is present and check it every time the hood is used."

p. 206
"After the face velocity of each hood has been measured (and the airflow balanced if necessary), each hood should be fitted with an inexpensive manometer or other pressure – measuring device (or a velocity-measuring device) to enable the user to determine that the hood is operating as it was when evaluated. This pressure measuring device should be capable of measuring pressure differences in the range of 0.1-2.0 in. of H20 and should have the lower pressure side connected to the duct above the hood and the higher pressure side open to the general laboratory atmosphere.

12.8 Handbook of Laboratory Safety

p. 117
"If there are administrative, classroom, or service areas within the same building as laboratories, the entire laboratory area should be at a modest negative pressure with respect to these spaces so that any airflow that exists will be from the non-research areas into the space occupied by laboratories.

"…the design of the air exhaust system from a laboratory must be done carefully to provide continuing replacement of fresh air in the room. The fume hood system and the supplementary exhaust system should be interlocked to ensure a stable room air balance at all times."

Please refer to the latest editions for all reference materials.

© SEFA - 5th Edition Desk Reference - Version 3.0

SEFA 1 - APPENDIX

Selection and Management of Exposure Control Devices in Laboratories

SEFA World Headquarters
65 Hilton Avenue
Garden City, NY 11530

Tel: 516-294-5424
www.sefalabs.com

SEFA SPELLS SAFE®

Acknowledgement

The Scientific Equipment and Furniture Association ("SEFA") gratefully acknowledges efforts of the Co-Chairmen of the Lab Ventilation Management Committee -

Tom Smith, President
3Flow™
tcsmith@3flow.com

Kevin Gilkison,
Vice President Sales Engineering
Labconco Corporation
KevinG@labconco.com

Without the knowledge, expertise and diligence of these dedicated professionals, this document would not have been realized.

Table of Contents

		Page
1	ACRONYMS	106
2	INTRODUCTION	107
2.1	Purpose	108
2.2	Scope	108
2.3	Regulatory Basis and References	108
3	ECD TYPES AND APPLICATION	109
3.1	Ventilation and Energy Consumption	111
3.2	Ventilation for Protection of Personnel	114
4	RISK AND ECD PERFORMANCE REQUIREMENTS	116
4.1	Spectrum of Risk	116
4.1.1	Airborne Hazard and Severity	118
4.1.2	Quantities of Materials	119
4.1.3	Airborne Hazard Generation	119
4.2	Hazard Emission Scenario	120
4.3	ECD Performance Criteria	121
5	SELECTION AND SPECIFICATION OF ECDs	121
5.1	ECD Performance Capabilities	121
5.2	ECD Application Risk Matrix	122
6	ECD TYPES, DESIGN, CONSTRUCTION AND OPERATION	126
6.1	Standard Laboratory Fume Hood	126
6.1.1	High Performance Fume Hood	127
6.1.2	Auxiliary Air Fume Hood	127
6.1.3	Distillation Fume Hood	128
6.1.4	Floor Mounted Fume Hood	128

Table of Contents

	Page
6.1.5 Perchloric Acid Laboratory Fume Hood	130
6.1.5.1 Acid Digestion Laboratory Fume Hood	130
6.1.6 Radioisotope Fume Hood	131
6.2 Ductless "Filtered" Fume Hood	132
6.3 Laminar Flow Clean Bench	133
6.4 Biological Safety Cabinet (BSC)	134
6.4.1 Class I	134
6.4.2 Class II, Type A1	135
6.4.3 Class II, Type A2	135
6.4.4 Class II, Type B1	136
6.4.5 Class II, Type B2	137
6.4.6 Class II Type C1 BSCs	137
6.4.7 Class III	138
6.5 Glove Box	138
6.6 Teaching Hood (Educational Hood)	139
6.7 Ventilated Safety Enclosure (VSE)	140
6.7.1 Ventilated Balance Enclosure (VBE)	141
6.8 Canopy Exhaust Hood	141
6.9 Flexible Spot Exhaust (FSE)	142
6.10 Slot Hood	143
6.11 Downdraft Table (Necropsy Table, Histology Station)	143
6.12 Ventilated Wet Bench	144
6.13 Wet Process Workstation	145
6.14 Hazardous Gas Storage Cabinet	146

© SEFA - 5th Edition Desk Reference - Version 3.0

Table of Contents

		Page
	6.15 Flammable Liquid Storage Cabinet	146
	6.16 Special Purpose Devices	1467
7	ECD System Management Plan	147
	7.1 ECD Management Program Description	147
	7.2 Program Management and Stakeholder Coordination	149
	7.2.1 Hazard Emission Risk Assessment	149
	7.2.2 Selection of ECD's	149
	7.2.3 ECD Design and Operating Specifications	149
	7.2.4 ECD Performance Verification	149
	7.2.5 Maintenance and Routine Testing	150
	7.2.6 Training of Personnel	150
	7.2.7 Management of Change	151
	7.2.8 Documentation and Record Keeping	152
	7.3 Responsibilities for the ECD Management Program	152
8	References Sources	155
9	Relevant Organizations	156

1 Acronyms

AHU	Air Handling Unit
ANSI	American National Standards Institute
AIHA	American Industrial Hygiene Association
ASHRAE	American Society of Heating Refrigeration and Air Conditioning Engineers
ASSE	American Society of Safety Engineers
BAS	Building Automation System
BSL	Biosafety Level
BSC	Biological Safety Cabinet
CAV	Constant Air Volume
CFD	Computational fluid dynamics
CFM	Cubic Feet of Air Per Minute
Cx	Commissioning
DP	Difference in pressure between two adjacent spaces
ECD	Exposure Control Device
ECTI	Exposure Control Technologies, Inc.
EH&S	Environmental Health and Safety
EXF	Exhaust Fan
FHPT	Fume Hood Performance Test
FPM	Feet Per Minute
Gex	General Exhaust
HEPA	High-Efficiency Particulate Arrestor
HES	Hazard Emission Scenario
HVAC	Heating, Ventilation and Air Conditioning
IDLH	Immediately Dangerous to Life and Health
LET	Laboratory Environment Test
LVMP	Laboratory Ventilation Management Program
O&M	Operations and Maintenance
Qex, Qs & Qt	Exhaust Flow, Air Supply Flow, Transfer Airflow
Riser	Vertical length of duct from lower floors to penthouse
SEFA	Scientific Equipment and Furniture Associations
VAV	Variable Air Volume
VFD	Variable Frequency Drive
VBE	Ventilated Balance Enclosure
VEE	Ventilated Equipment Enclosure
VSE	Ventilated Safety Enclosure
VVE	Variable Volume Exhaust

© SEFA - 5th Edition Desk Reference - Version 3.0

2 INTRODUCTION

The Scientific Equipment & Furniture Association ("SEFA") is a global, not-for-profit trade association whose Executive Members are among the world's largest manufacturers of laboratory furniture and equipment. SEFA was formed in 1988 and currently has 165 members in 22 countries. SEFA's essential purpose is to promote the use of "Laboratory Grade" furniture, fixtures and equipment. To insure that laboratory grade equipment is used it is important that industry representatives refer to SEFA's Recommended Practices (Standards) for laboratory grade furniture and fixtures.

Exposure control devices (ECDs) provide the main engineering control for preventing overexposure of personnel to airborne hazards generated within laboratories. ECDs can be ventilated as a part of a laboratory ventilation system or operate independently with internal fans that return filtered air back to the lab environment. In either case, proper performance means preventing overexposure through control, capture and removal of airborne hazards at or near the source. The chemical fume hood (sometimes call fume cupboard) is the primary and predominant ECD used in labs, but other types are also used including biological safety cabinets (BSCs), ventilated safety enclosures (VSEs), snorkel exhaust, slot hoods, gloveboxes, and many other special purpose devices. Each type of ECD is different in design to accommodate the application and can offer different levels of protection for users. Ensuring adequate protection requires: understanding the functional requirements of the users; understanding the characteristics of the physical process; selecting the appropriate ECD; ensuring proper design of the laboratory and the ventilation systems; and, maintaining operation within specifications verified or validated to provide satisfactory performance.

The performance of an ECD can be affected by four primary factors including its design, how it is operating, how it is used and the operating environment. The ECD must be appropriate for the intended application and utilized by people trained in proper work practices. All ECDs must be tested and maintained to ensure they perform properly and provide adequate protection for people working in the lab. The evaluation of performance and procedures used to verify proper operation must be appropriate for each device. In addition, the lab environment and supporting ventilation systems must be properly designed, tested and maintained to ensure proper performance at all possible operating modes. For the purposes of this document, the ECDs together with the components of the exhaust and air supply systems that affect ECD performance are referred to collectively as the ECD System. See Figure 1 for a diagram depicting different ECDs in a laboratory and other ECD System components that may affect performance.

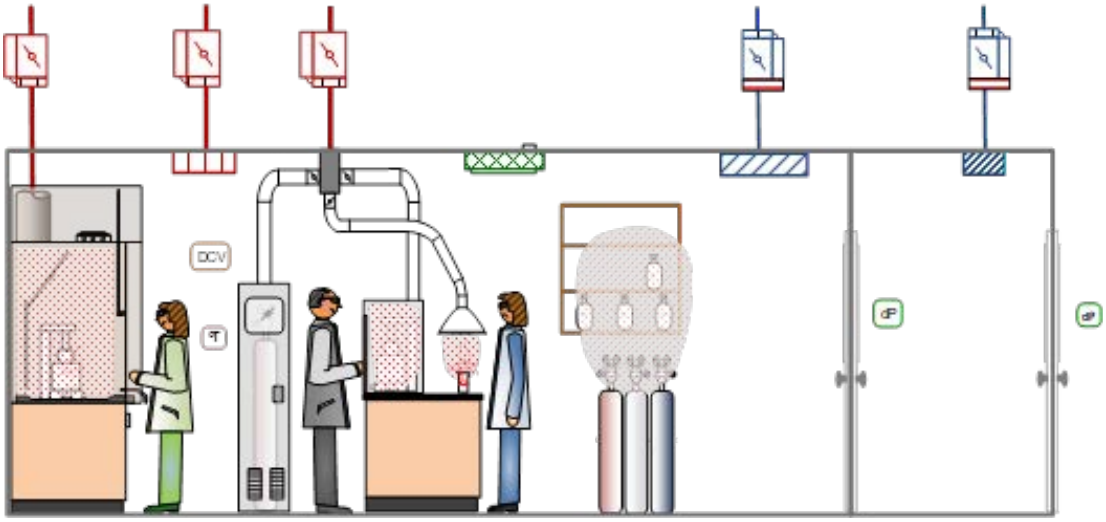

Figure 1 Side view of lab depicting various ECDs and Lab Ventilation Components

In addition to providing the primary means of protecting people working in labs, the ECD Systems can also be the greatest consumer of energy in laboratory buildings. The operation of ECD Systems is typically attributed to 50% to 85% of annual energy consumption depending on the volume of airflow, efficiency of the systems and need to condition the supply/replacement air. Poor selection, improper design, component malfunction and/or failures of ECD Systems increase the probability and/or severity of unacceptable impact to the health of people, harm to the environment, loss of property, increased liability, wasted energy and inefficient utilization of resources. The ANSI/AIHA Z9.5 American National Standard for Laboratory Ventilation requires laboratory management to establish a Laboratory Ventilation Management Plan (LVMP) to ensure proper selection, operation, use, and maintenance of laboratory ventilation equipment used to control airborne hazards generated during laboratory scale procedures.

2.1 Purpose

The primary purpose of this Manual is to help select and manage performance of ECDs used to control exposure to airborne hazards generated in laboratories. This Guide compliments SEFA guidelines (i.e. SEFA-1, SEFA-9, SEFA-11) for fume hoods and other exposure control devices (ECDs). This document is not intended to duplicate other standards and guidelines but instead expand the available information to help users better provide safe, efficient and sustainable laboratory environments. This Guide intends to help stakeholders increase the probability of: providing adequate protection for lab occupants; meeting the demand for ventilation; minimizing energy consumption and; reducing expenditures.

2.2 Scope

There any many types of ECDs commonly available for laboratories. These ECDs are applied to help control overexposure to airborne hazards generated during "laboratory-scale" activities. Many different types and sources of airborne hazards exist in laboratories and the selection and use of the appropriate ECD can be critical to achieving adequate safety performance. This Guide describes different types of ECDS, their intended use, and methods for managing performance. General laboratory safety practices are not included except where they may relate to the ECD System's proper function or effectiveness to control airborne hazards. This guide does not apply to comfort and air conditioning unless there are possible effects on control of airborne hazards and ECD performance.

2.3 Regulatory Basis and References

Laboratory facilities are required to ensure proper functioning and performance of ECDs used to protect people working in labs. This Guide provides information to support selection and use of different types of ECDs commonly found in laboratories. The information contained herein is meant to compliment the Scientific Equipment and Furniture Association, 5th Edition, Desk Reference, the ANSI/ASSE Z9.5-2012 "American National Standard for Laboratory Ventilation", the ANSI/ASHRAE 110-2016 Method of Testing Performance of Laboratory Fume Hoods, the Public Works and Government Services of Canada, PWGSC Standard MD15128 Laboratory Fume Hoods, the European Standard EN14175 Fume Cupboards. Additional resources include OSHA regulatory documents such as the OSHA 1910.1450 Laboratory Standard, the NSF International (The National Sanitation Foundation) NSF/ANSI 49 - 2008, Biosafety Cabinetry: Design, Construction, Performance, and Field Certification and ECD product guides from SEFA member manufacturers.

In all cases, facility management and environmental health and safety personnel should be consulted

© SEFA - 5th Edition Desk Reference - Version 3.0

with questions or for guidance on risk assessment, ECD application, performance criteria and regulations regarding health, safety and the environment. Where national, state, or local laws require a higher (specific or additional) requirements than mentioned herein, these requirements must be followed first and foremost. However, where national, state, or local laws are less stringent or less comprehensive, SEFA recommends consideration and application of the most appropriate engineering controls and measures available.

3 ECD TYPES AND APPLICATION

ECDs are manufactured, installed and operated to meet the functional requirements of the users and provide the primary engineering control for mitigating the risk of personnel exposure to airborne hazards in laboratories. Selection and use of appropriate ECDs requires consultation with stakeholders including researchers, lab managers, health and safety personnel, ventilation engineers and facilities maintenance personnel. Considerations during selection should include:

- The hazards and processes
    - Airborne Effluent Properties
    - Exposure Limits and Concentration Levels of Concern
    - Characteristics of Generation
    - Quantities
- User-specific needs;
- Type, size and construction of the ECD;
- Required performance capabilities;
- Ventilation system and airflow control requirements;
- Operating modes, and
- Potential impact of changing environmental conditions.

There are many different types, models and sizes of ECDs. In addition, ECDs include many different features, components and sub-systems. Some ECDs are designed exclusively to provide personnel protection, whereas other designs incorporate special filtration and/or isolation features to provide both personnel and product protection. In addition, certain ECDs are equipped to handle a wide variety of effluent including gases, vapors and aerosols, but other ECDs may only be suitable for handling particulates. In general, the major types of ECDs include:

- Chemical Fume Hoods;
- Biological Safety Cabinets (BSCs);
- Ventilated Safety Enclosures (VSE);
- Snorkels (Spot Exhaust);
- Downdraft Tables;
- Slot Hoods,
- Canopy Hoods, and
- Glovebox/Isolators.

Other types of devices may include ductless enclosures, special purpose devices and custom equipment enclosures. SEFA 9-2010 provides guidance on ductless enclosure. Regardless of the type, any ECD utilized in labs to control exposure must be included in the LVMP. Figure 2a and 2b list major types and models of ECDs and recommended application. Additional information about suggested application of each device can be found in subsequent sections of this document.

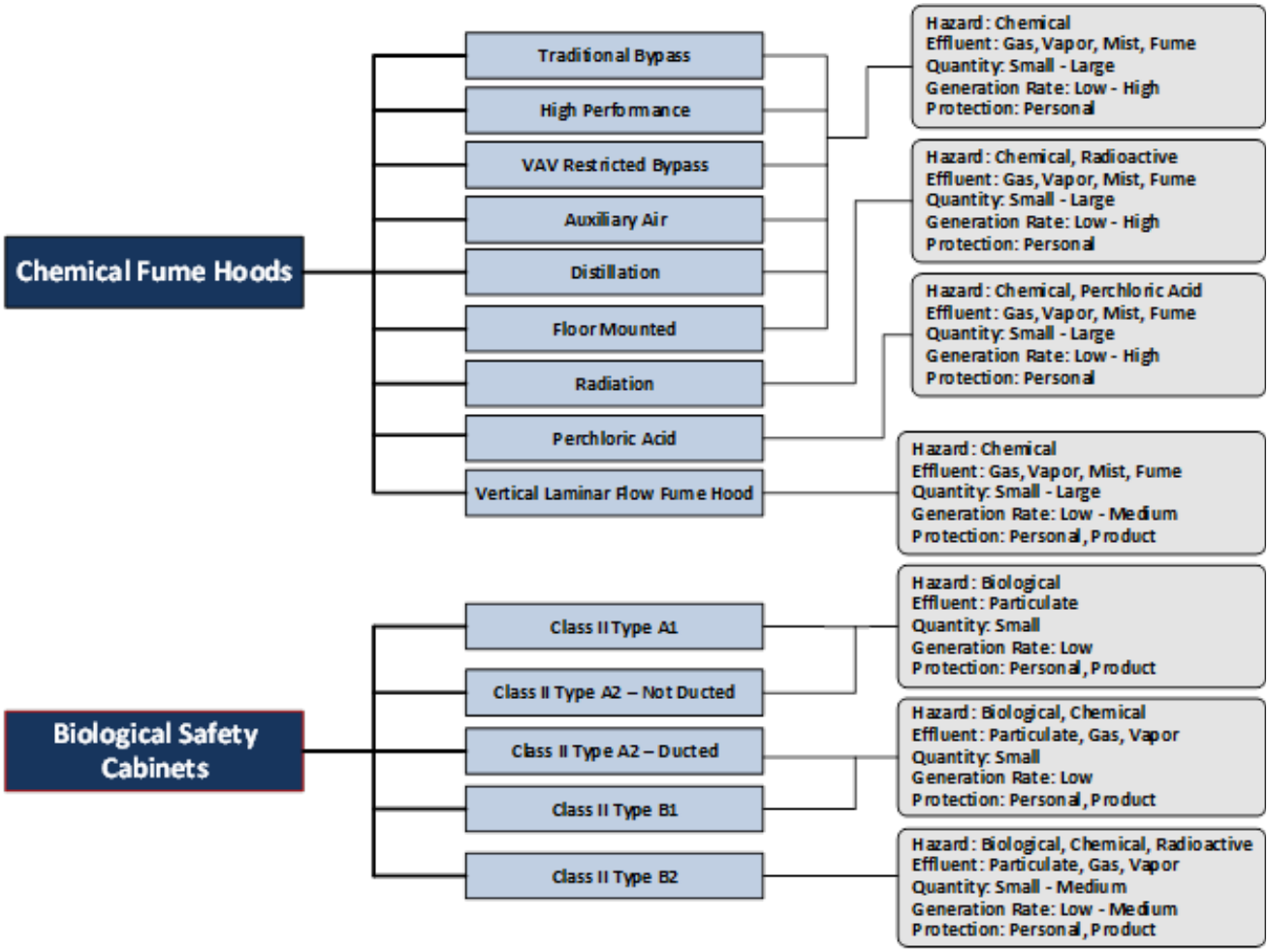

Figure 2a - Major Types of ECDs and Typical Application.

© SEFA - 5th Edition Desk Reference - Version 3.0

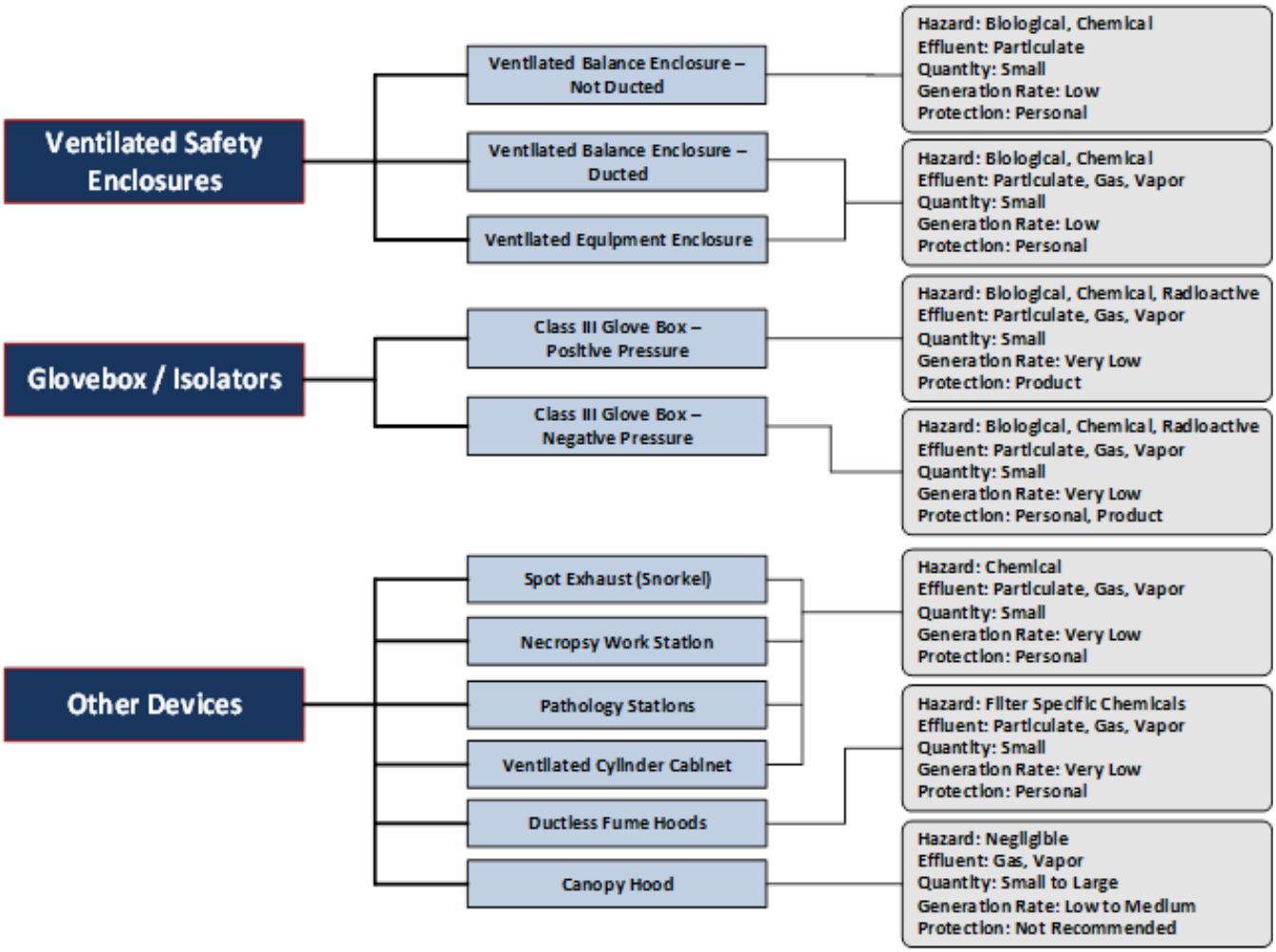

Figure 2b - Major Types of ECDs and Typical Application.

3.1 Ventilation and Energy Consumption

ECDs and laboratories utilize airflow to contain and capture contaminants, dilute and remove contaminants, isolate the laboratory from adjacent areas and control space temperatures. The volume of airflow required to provide adequate protection depends on the risk, the design of the ECD employed and the operating modes. ECDs, such as chemical fume hoods, typically require greater exhaust flow than ventilated balance enclosures or snorkel exhaust devices. Furthermore, variable air volume (VAV) fume hoods and other types of ECDs can vary the exhaust flow depending on their utilization and available modes of operation. Modulation of flow through fume hoods and other devices affects the volume of airflow through the laboratory resulting in variable air change rates and varying airflow patterns with potential adverse effects on ECD performance and lab air balance. Energy consumption is a function of numerous factors including flow and system static pressure. Minimizing the volume of airflow and system resistance when and where possible is desirable, but never at the expense of safety. Safety is an inviolable constraint and the performance requirements can dictate the minimum airflow and operating specifications for ECDs and laboratories.

Figure 3A and 3B depict an example lab showing the plan and elevation diagrams indicating the location and type of ventilation devices located therein. Proper performance requires specification

of the minimum and maximum flow for each exhaust and supply device for the range of possible operation.

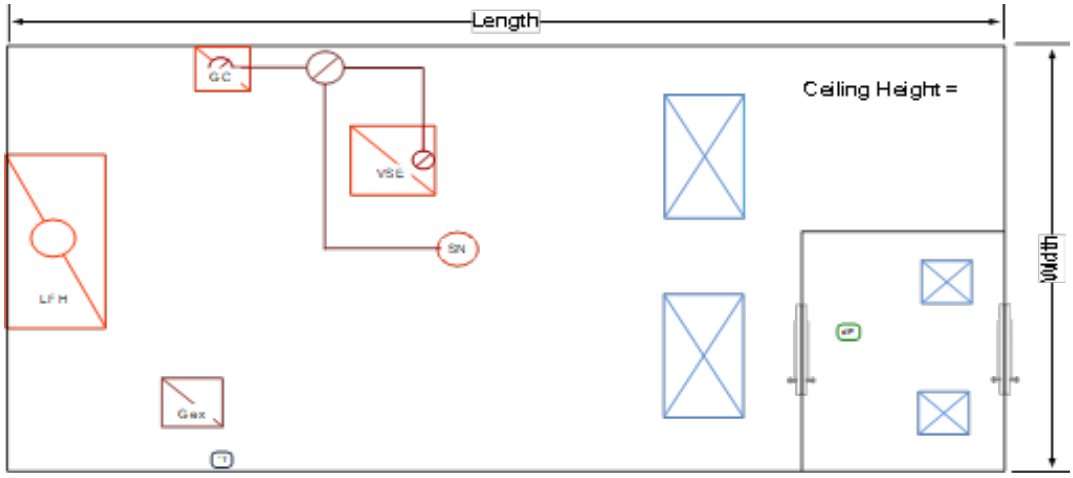

Figure 3A - Top view or plan view of lab showing location of major ventilation components

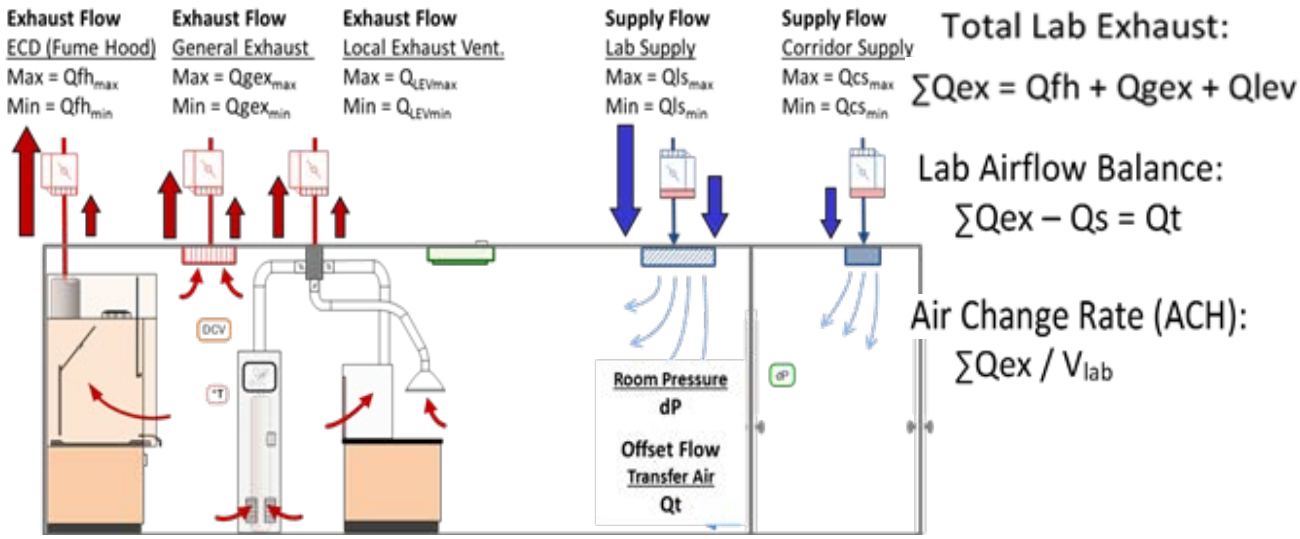

Figure 3B Side view of laboratory showing exhaust and air supply flow

Airflow specifications are required for all ECDs, the general exhaust, the air supply and the offset volume (transfer air) required to maintain space pressurization. Negative pressurization may be critical to provide isolation to prevent contaminant escape or to minimize contaminant infiltration. The flow specifications for ECDs and the lab environment depend on numerous factors including the risk of exposure and the overall demand for ventilation. Improper airflow specifications can lead to poor performance of ECDs and deleterious operating conditions.

Modulation of exhaust flow must be balanced with mechanically supplied, properly conditioned, replacement air plus or minus the transfer air required for the desired lab pressurization. Changes in the exhaust for any device requires an immediate and commensurate change in supply flow to compensate and maintain balance. It is usually preferable to maintain a constant offset volume to maintain space pressure relationships regardless of changes in operating modes. For a laboratory containing a VAV

© SEFA - 5th Edition Desk Reference - Version 3.0

fume hood that also modulates general exhaust and air supply flow to control room temperature, there can be a variety of operating modes, sequences of operation and a significant range of flow. The total flow through the lab can vary from low when unoccupied to maximum with the fume hood in use and where high conditioning loads requires extra supply. Table 1 describes four common operating modes that demonstrate the impact on total airflow for a lab with a VAV fume hood and VAV terminal reheat, air supply systems.

Table 1 Operating modes and impact on total airflow through lab

Mode	Operating Condition
1	Unoccupied Lab – Sashes Closed – Min. Conditioning Required
2	Occupied Lab – Sashes Closed – Max. Conditioning Required
3	Occupied Lab – Sashes Open – Min. Conditioning Required
4	Occupied Lab – Sashes Open – Max. Conditioning Required

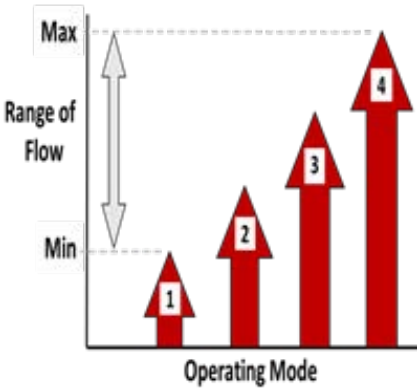

Theoretically, the ECD Systems are operating properly when the change in flow through an ECD and the laboratory translate to an equivalent change in flow at the exhaust fan units and air supply units serving the laboratory. The total airflow through the systems can vary depending on the aggregate operating mode for all spaces where minimum flow corresponds to all spaces operating at the lowest flow mode and the highest airflow results when all spaces are operating at the mode corresponding to the highest flow. The energy consumption is a function of the total flow through the systems and energy can generally be reduced by decreasing the average flow over time. The diagram in Figure 4 depicts an ECD System where the range of flow modulation can be related to energy consumption. The average operation over a period of time should correlate closely with the demand for ventilation.

For effective management of both safety and energy consumption, the criteria for ECD selection and establishment of airflow specifications should focus on mitigating risk and satisfying the demand for ventilation without excess or unnecessary ventilation. The safest and most efficient operation results when the ECD Systems modulate flow to meet and track changes in the demand for ventilation. Unfortunately, many systems suffer due to improper or inadequate evaluation of risk, improper specification of airflow and failure of the controls to properly modulate air supply and exhaust fans over the range of flow dictated by the demand for ventilation. Failure to properly modulate flow can compromise both safety and energy efficiency. This understanding is key to achieving safe, energy efficient and sustainable labs. The following section describes risk and methods to evaluate the demand for ventilation.

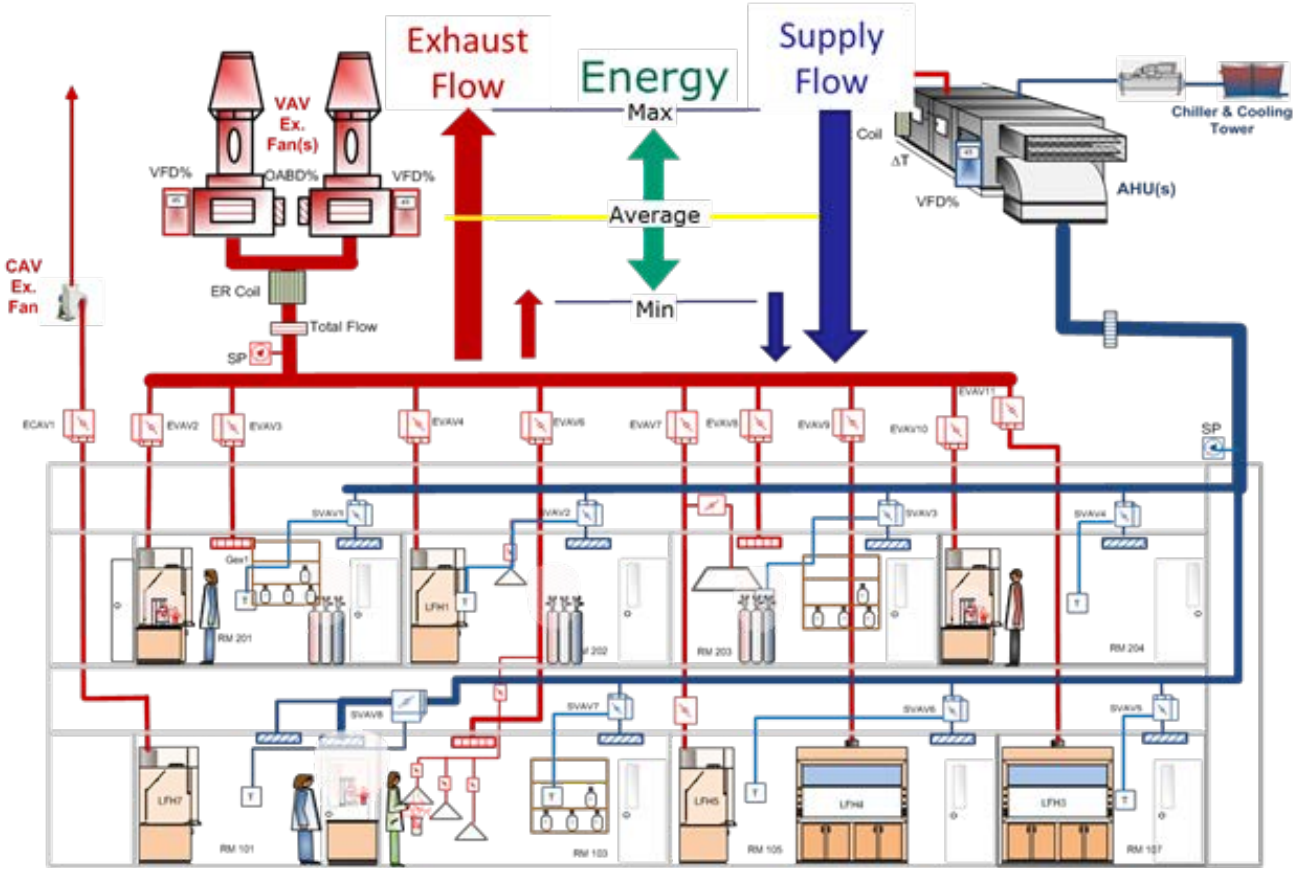

Figure 4 Diagram depicting ECD Systems and energy use corresponding to the range of airflow modulation.

3.2 Ventilation for Protection of Personnel

ECDs are designed and operated for different purposes and they offer varying levels of protection depending on their design, use, operation, and the impact of environmental conditions such as room air turbulence, temperature gradients and pressurization. The location of air supply fixtures, ECDs and general exhaust together with the resulting airflow patterns are critical to support ECD performance, provide adequate dilution and facilitate contaminant removal from the lab environment. Sources of extraneous concentrations in the lab environment may include escape from ECDs, poorly sealed storage containers, leaking gas cylinders, and analytical equipment operating outside ECDs. Where the ECDs provide primary protection through source capture, the airflow through the lab environment provides secondary protection through dilution and removal of extraneous contaminants. Figure 5 depicts a laboratory with a fume hood to provide capture, containment and removal of hazards generated therein and relies on dilution and removal of contaminants concentrations in the lab exterior to the fume hood.

© SEFA - 5th Edition Desk Reference - Version 3.0

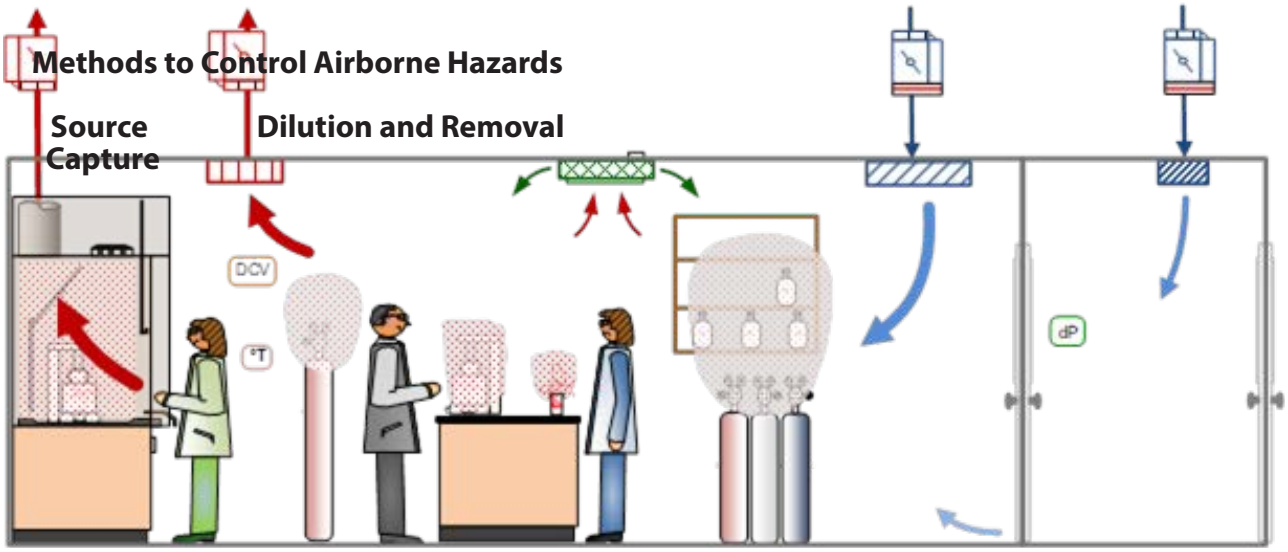

Figure 5 Diagram of laboratory with various types of ECDs and potential sources of airborne contaminants.

Some of the issues to consider when evaluating potential sources of airborne hazards in labs include:

- The risk of exposure posed by the generation of airborne hazards. For example, some materials can cause acute adverse effects at very low concentrations whereas other airborne hazards can have more chronic effects after prolonged exposure.

- The effectiveness of available methods to mitigate unacceptable risk.

- The volume of airflow required for dilution and the effectiveness of removal from the lab environment.

- The appropriate type of ECD and airflow specifications necessary to provide adequate protection.

- The capabilities and limitations of the ECDs. For example, a canopy hood may offer very little protection for the operator whereas a glovebox may be required to provide total isolation and maximum protection.

- The factors that influence when an ECD, such as a fume hood, is not appropriate or the level of performance may not provide adequate protection.

- The methods required to validate performance and factors that affect performance over time. In many instances, measurement of air velocities alone may be inadequate to evaluate potential for exposure. More sophisticated tracer gas tests or even exposure monitoring may be required to assure proper safety performance.

- The impact of changes in hazardous materials, processes or potential for generating airborne contaminants.

- The range of airflow through the ECD laboratory and potential impact of varying flow on dilution, contaminant removal effectiveness, and ECD containment performance.

- The impact of the airborne hazards on the ECD System. Some materials like acids may degrade the duct and components leading to premature degradation and inadequate performance. The materials of construction can be critical to long-term performance.

- The need for training and enforcing use of proper work practices.

The level of required protection typically depends on the process, the severity of the airborne hazards, the exposure limits, the quantities of materials used in the process and the characteristics of generation including the rate and type of effluent. These characteristics define a hazard emission scenario that can be used to specify an ECD and determine appropriate operating specifications for the laboratory and ECD System. The hazard emission scenario must stay within the boundaries dictated by "laboratory scale" work (i.e. substances in containers used for reactions, transfers and other applications that are designed to be easily handled by one person). The ECD must be appropriate for the application, operate properly and provide adequate performance over the range of possible operating conditions. The level of protection afforded by an ECD system is ultimately based upon the ability to control and limit concentrations of airborne contaminants where people could be exposed. The rate of contaminant accumulation equals the rate of generation minus the rate of removal. The following section describes risk factors and information to help specify appropriate ECDs.

4 RISK AND ECD PERFORMANCE REQUIREMENTS

4.1 Spectrum of Risk

There are many possible hazards in laboratories particularly where activities involve chemical, biological and/or radioactive materials. People can be exposed to airborne hazards through inhalation, contact with the skin or ingestion of food or drinks contaminated through contact. The risk or potential for exposure to an airborne contaminant is a function of many factors that depend largely on the how the contaminants are generated, the magnitude of the resulting concentration, and the duration of the concentration in the occupied space. The potential for exposure and risk of suffering adverse effects (health or otherwise) is subject to an even more complex interaction of variables that include not only the type of hazard and the dose (concentration times duration), but also the susceptibility of the exposed individual.

The spectrum of risk of exposure to airborne hazards in labs can range from negligible to extreme. ECD Systems are employed to reduce the risk to people, property and the environment by controlling airborne hazards, limiting accumulation of unsafe concentrations and minimizing the duration of unsafe concentrations. Some ECDs are also used to minimize potential and effects of explosions and high-pressure gas release. As shown in Figure 6, the range of risk can be associated with the design and operating requirements of the ECD System and other factors including energy consumption, stakeholder effort, operating costs and potential liability.

© SEFA - 5th Edition Desk Reference - Version 3.0

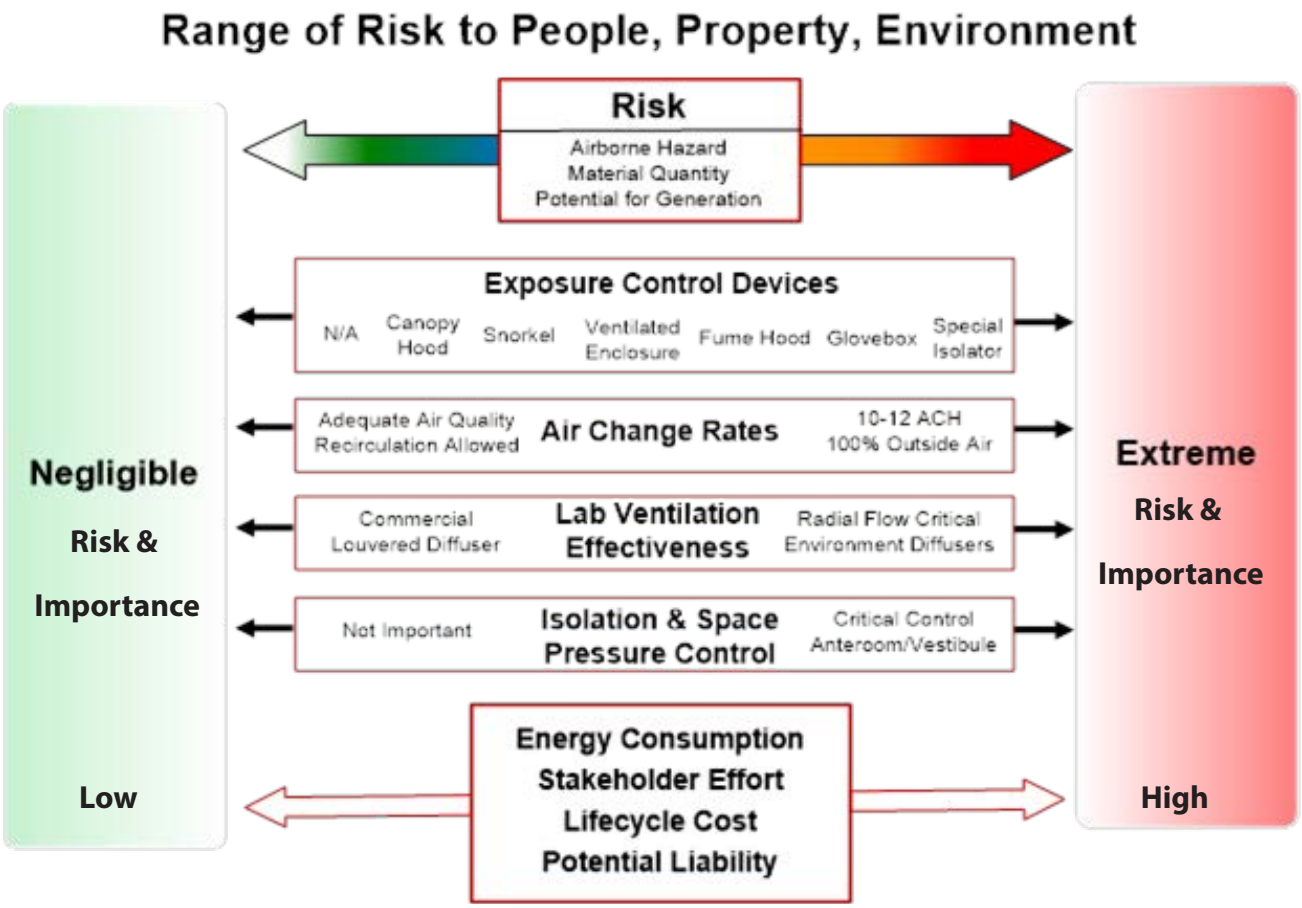

Figure 6 Relationships that correlate with the spectrum of risk from airborne hazards in labs.

The risk can be characterized as a function of the type and quantity of airborne hazards, the rate of generation, the duration of generation and the severity of exposure. Characterization enables better selection and design of the ECDs, establishment of airflow specifications and configuration of the lab supply and exhaust devices to maximize effectiveness of ECD Systems. Exposure and the risk of adverse health effects can be based on the potential magnitude of the airborne concentration, the potential residence time of the concentration, the severity of the hazard and the duration of exposure. As such, risk factors include the severity of the hazards, the quantities of materials, the rate of generation, the duration of generation and effectiveness of the ECD system to capture, dilute and remove the airborne contaminants. The severity of the hazard indicates the maximum allowable concentration, the potential for generation indicates the rate of generation and the quantity of material indicates the potential duration of generation. Figure 7 shows the risk as a function of the hazard, the potential for generation and quantity of the material available to sustain generation.

In this context, risk is an estimate of the probability that unsafe concentrations of airborne hazards may exist. The range of risk is always greater than zero and less than 100%. Risk can't be 100% because it would then be a certainty and it can't be zero as it would then cease to be a risk. No algorithm may accurately calculate risk, but there is value in understanding and characterizing the factors influencing the level of risk.

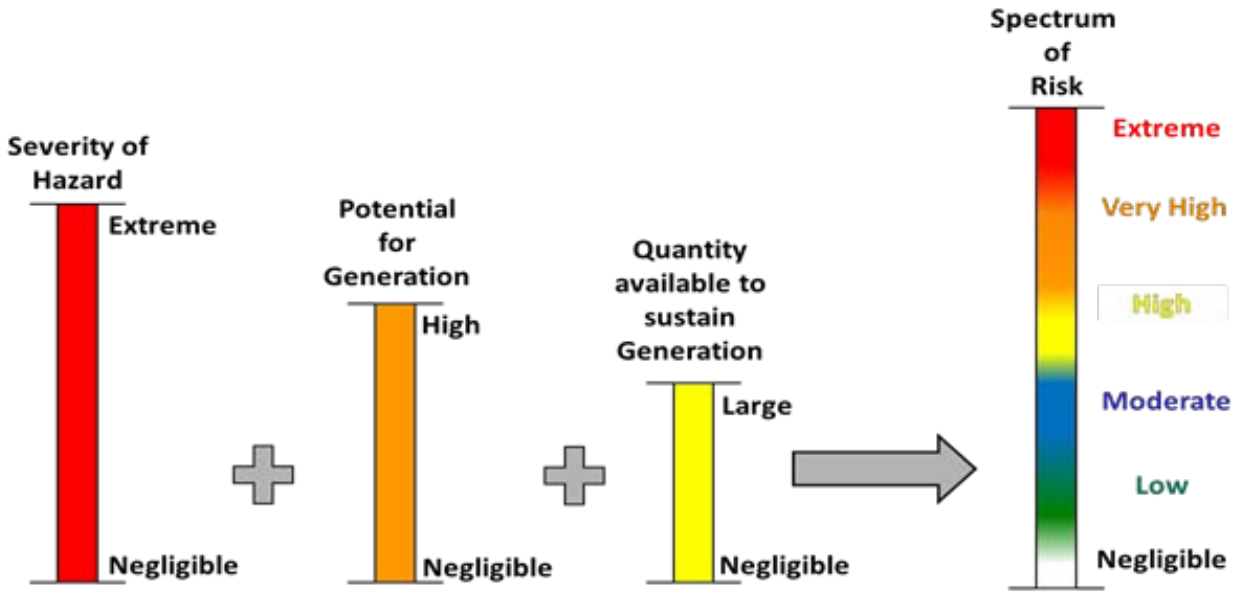

Figure 7 Risk factors that indicate the risk of a hazardous airborne concentration.

4.1.1 Airborne Hazard and Severity

The characteristics of airborne hazards and the concentration levels of concern are critical to evaluating risk and ensuring appropriate design and operation of an ECD System. Airborne hazards (effluent) are present in concentrations of gases, vapors, particulates and other types of aerosols typically composed of chemical, biological and/or radioactive materials. The characteristics of the effluent can affect the type of ECD, need for filtration, materials of construction, capture velocities and duct transport velocities. The following categories can be used to help characterize the hazardous effluent.

- **Gas** – A substance that exists in the gaseous state and lacks inherent volume and shape at normal atmospheric conditions. Examples: oxygen or helium.

- **Vapor** - A substance in the gaseous state that is a liquid at standard temperature and pressure, exerting a partial pressure that can be condensed into the liquid form. Examples: formaldehyde, xylene and acetone.

- **Fume** - Condensed solid particles produced by physicochemical reactions such as combustion, sublimation, or distillation. Examples: fumes from spectroscopy samples and laser surgical procedures.

- **Mist** - Airborne liquid droplets associated with the disruption of a liquid. Examples include sonication, spraying, mixing, and violent chemical reactions.

- **Particulate** - Solid particles (Silica gel, Aluminum oxide) or nanoparticle products that are temporarily suspended in a volume of air. Deposition of suspended particulates is dependent on particle size and turbulence.

The hazardous materials can be further classified by type, physical properties, negative effect of exposure and exposure limits. There are many different types of materials and methods to classify the hazard associated with the materials of concern. Some examples of type and effect include:

© SEFA - 5th Edition Desk Reference - Version 3.0

- **Carcinogen** – Materials that are known cancer causing agents.

- **Flammable** – Materials with a higher risk of catching fire.

- **Reactive** – Materials that violently react with certain substances such as water or oxygen.

- **Corrosive** – Materials that can easily destroy or damage materials of construction or surface materials the contaminants contacts such as metal, plastic or skin.

- **Explosive** – Materials that may explode when subject to high heat, sparks or other ignition sources.

The concentration level of concern that may lead to adverse health effects may be associated with exposure limits published by organizations such as the United States Occupational Safety and Health Administration (OSHA), the American Conference of Governmental Industrial Hygienist (ACGIH) and other groups including material producers. Hazards can be described as acute or chronic where acute hazards have more immediate effects from exposure and where chronic hazards may exhibit effects after repeated exposure or after some prolonged latency period.

The severity of the hazard is based on the potential effects from overexposure and range from negligible to immediately dangerous to life and health (IDLH). Exposure limits are typically reported as concentration in mass per unit volume (i.e mg/m3) and parts per million (ppm). Negligible health hazards may have concentrations with a level of concern greater than 1000 ppm (< 1 g/m3) whereas extreme hazards may be associated with concentrations of concern less than 1 ppm (1 mg/m3). However, these definitions for the hazard level may vary and be subject to the authority having jurisdiction, the prevailing standard (regulatory and institutional) or referenced source.

As the application and protective capability of ECDs can vary, understanding the risk can be critical to selecting the appropriate ECD and establishing operating specifications that enable the required control and performance. In the absence of the requisite information, the choice of ECD and operating specifications can be based on a worst-case scenario and account for the ability of the user to safely conduct the hazardous procedure. Most labs will operate within a definable range hazard where a concentration levels of concern (LOC) can be associated with a level of risk from negligible to extreme. The LOC then defines the criterion for performance. For example, a concentration LOC of 0.1 ppm indicates that the ECD must be capable of preventing escape greater that 0.1 ppm.

4.1.2 Quantities of Materials

The quantity of material is important to consider as large amounts of materials can potentially contribute to a long duration of generation. Local regulations, national fire codes, and mechanical building codes often set limits on the maximum quantities of materials that can be stored and/or used in laboratories. Refer to table 2 for example classifications of material quantities that might represent a range anticipated for a small lab. Note that all things may be relative as a minute quantity per Table 3 may represent a very large quantity of a highly hazardous material. It is important to understand the hazards when establishing the volume or mass of material associated with rather arbitrary descriptions such as minute, small, moderate, large or extra-large.

Table 2 Range and quantity of materials used in laboratory scale procedures

Description/Quantity	Volume	Mass
Minute	**< 1 mL**	**< 1 mg**
Small	**< 1 L**	**< 1 g**
Moderate	**< 1 mL**	**< 10 g**
Large	**< 10 L**	**< 100 g**
Extra Large	**< 50 L**	**< 500 g**

4.1.3 Airborne Hazard Generation

Health and safety staff should consult with laboratory managers, Principal Investigators (PIs) and other stakeholders to characterize procedures, evaluate means of generation, estimate the potential rates of generation and consider future changes in activities. Airborne hazards can be generated during a variety of activities where the rate may be subject to the process and the mechanism affecting generation. The following categories can be helpful for characterizing hazardous procedures:

- **Storage:** Emissions may occur from improperly sealed or degraded storage containers. The rate and quantity of generation may be small, but not negligible. Complaints of odors may indicate escape of small concentrations from inadequately sealed containers. Note that some chemicals may pose hazards below the odor threshold.

- **Closed Process:** Materials are contained in process apparatus, which may include beakers, flasks, tubing, equipment, etc. The volume of material that could be released during a catastrophic incident such as accidental over pressurization, damage to the system or leaks should be estimated.

- **Normal Process:** A normal process typically involves procedures that result in low volume generation and where little energy is added to the process. Pouring and weighing of materials and pipetting are examples of a normal process where generation of materials is typically through diffusion and/or evaporation.

- **Complex Process:** A complex process generally involves procedures that apply significant energy and produce a larger volume of airborne contaminants. Such processes might involve volatile reactions, stirring and mixing, heating and boiling, bulk material transfers and weighing. The application of energy complicates the determination of contaminant generation rates.

- **Leaks to Catastrophic Failure:** Partial or total sudden release of material resulting from a physical defect such as worn gaskets, rupture in connective tubing, pinhole in a structural weld, etc.

There are no standardized categories that relate to the generation rates associated with the range of laboratory procedures. Research conducted by Exposure Control Technologies, Inc., now known as 3Flow™ indicates the generation rates shown in Table 3 lists different types of processes and associated generation rates. In the absence of information about generation rates, the worst-case rates for normal operating conditions should be used to determine the hazard emission scenario.

© SEFA - 5th Edition Desk Reference - Version 3.0

Table 3 Typical ranges for laboratory scale generation rate

Category	Generation Rage (lpm)	Possible Source
Storage and Closed Process*	<0.1	Fugitive emissions from leaky containment vessels
Normal Porcess	0.1 - 1	Open containers, evaporation
Complex Process	1 - 10	Boiling/mixing/stirring
Leaks to Catastrophic Failure*	<0.1 to >1400	Leaking or Failed Compressed Gas Cylinders

* Note: Worst case release from catastrophic failure should be estimated.

4.2 Hazard Emission Scenario

As described above, the appropriate ECD and the required level of performance depend on the types of hazards, exposure limits, quantities of materials used in the processes and estimates of the rates of generation. These combined characteristics define the hazard emission scenario that can be used to select the ECD. A hazard emission scenario can also be used to test and validate ECDs and establish the required operating specifications. Hazard emission scenarios can and should be used to further aid the ECD specification process.

4.3 ECD Performance Criteria

After considering the risk factors, the performance criteria define the required level of containment or protection afforded the user. The hazard emission scenario together with the performance criteria are used to select the ECD and determine appropriate tests to challenge the device and validate adequate performance under the prevailing operating conditions.

5 SELECTION AND SPECIFICATION OF ECDs

5.1 ECD Performance Capabilities

Figure 8 shows a diagram representing increasing hazard levels on the y axis and increasing generation potential (as a function of both the rate and quantity of material) on the x axis. The different types of ECDs are shown on the diagram to simply represent their application according to the hazard level and generation potential. The diagram provides only a representation of typical areas of application and determining thresholds would be subject to the process and capabilities of the ECDs.

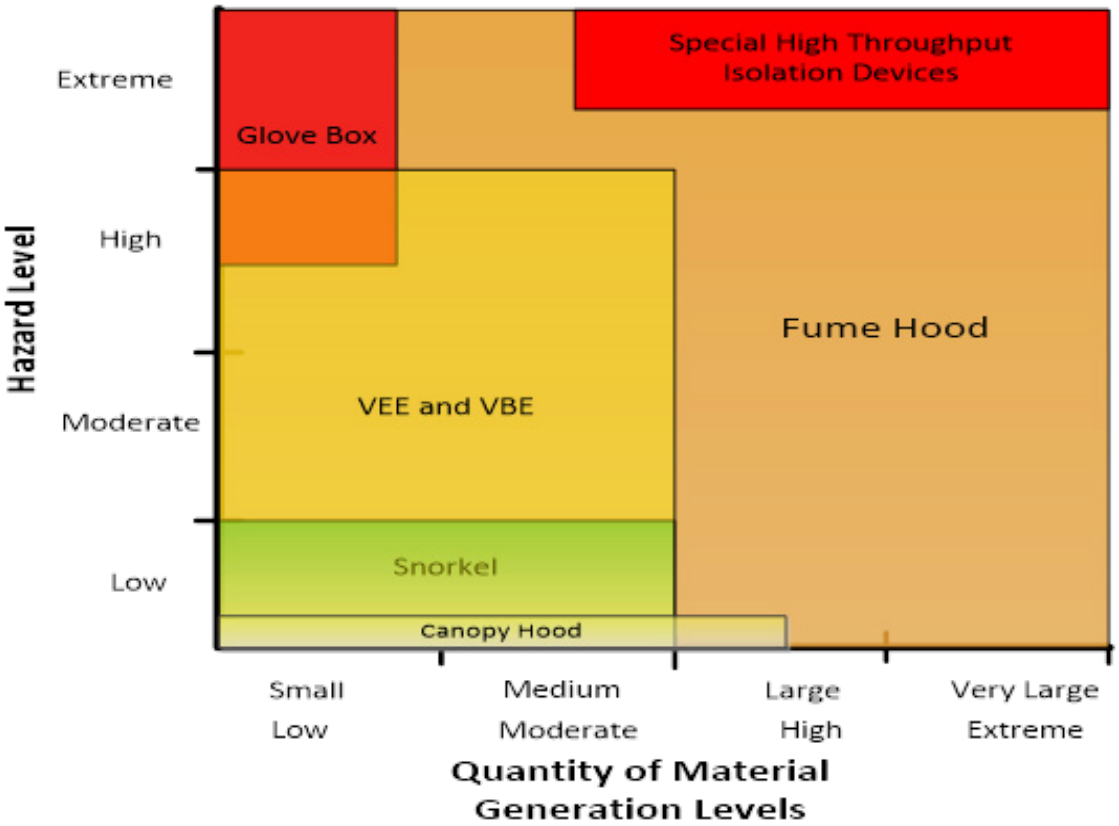

Figure 8 ECD applications as a function of hazard level and generation potential.

Fume hoods provide the widest range of protection for hazard emission scenarios that include small to very large quantities of low to extremely hazardous materials generated at rates from less than 0.1 liter of gas per minute (lpm) to as much as 10 lpm. Snorkel exhaust devices are used for negligible to low hazards with correspondingly low generation rates. Unducted BSCs and VSEs equipped with HEPA filtration are only appropriate for protecting people from exposure to small quantities of low to highly hazardous particulates at up to moderate rates of generation. Ventilated Safety Enclosures (VSE) can be used for low to high hazards with low to moderate rates of generation. Gloveboxes provide the greatest protection for airborne materials of high to extreme hazards, but only for small quantities with very low rates of generation. Finally, special isolators combine the throughput of fume hoods and protection of a glovebox are used for high to extreme generation rates of high to extreme hazards.

5.2 ECD Application Risk Matrix

ECD Application Risk Matrices shown in the following tables 4, 5 and 6 can be used to match the ECD to the hazard emission scenario. The risk factors consider the type of material, the characteristics of the hazard, quantities and the potential for generation. Please note that it is important to consider that the user must understand the capabilities of limitations of the devices and how application of proper work practices can impact the effectiveness and ability to provide adequate protection. Refer to the Risk Matrices provided below for chemical fume hoods, BSCs and other types of ECDs.

© SEFA - 5th Edition Desk Reference - Version 3.0

Table 4 ECD Application Risk Matrix for different types of fume hoods

Fume Hood Risk Matrix																		
ECDs	Hazard Level	Quantity	Generation	Chemical	Biological	Radioactive	Radioisotopes	Product Protection	Gas/Vapor	Particulate/Powder	Nanoparticle	Acute	Carcinogen	Flammable	Reactive	Corrosive	Explosive	Heated Process
Chemical Fume Hood	High	Very Large	Very Large	✓	(1)	✓			✓	✓	✓	✓	✓	✓	✓	✓	✓	✓
Radioisotope Fume Hood	High	Very Large	Very Large	✓		✓	✓		✓	✓	✓	✓	✓	✓	✓	✓	✓	✓
Perchloric Fume Hood	High	Very Large	Large	✓					✓	✓	✓	✓	✓	✓	✓	✓	✓	✓
Laminar Flow Fume Hood	High	Very Large	Very Large	✓				✓	✓	✓	✓	✓	✓			✓		✓
Filtered Fume Hood	Medium	Medium	Low	✓					✓	✓								
Auxiliary Fume Hood	High	Very Large	Very Large	✓					✓	✓	✓	✓	✓	✓	✓	✓	✓	✓
Distillation Fume Hood	High	Very Large	Very Large	✓		✓			✓	✓	✓	✓	✓	✓	✓	✓	✓	✓
Floor Mounted Fume Hood	High	Very Large	Very Large	✓		✓			✓	✓	✓	✓	✓	✓	✓	✓	✓	✓
Educational Hood	Medium	Large	Large	✓					✓	✓	✓	✓	✓	✓	✓	✓	✓	✓

Notes: (1) See Table 5 for application with Biological Materials

Table 5 ECD Application Risk Matrix for different types of BSCs

Biological Safety Cabinet Risk Matrix																	
ECDs	Bio Hazard Level	Generation	Chemical	Biological	Radioactive	Radioisotopes	Product Protection	Gas/Vapor	Particulate/Powder	Nanoparticle	Acute	Carcinogen	Flammable	Reactive	Corrosive	Explosive	Heated
Class I	1-3	Very Low	✓	✓					✓	✓	✓	✓					
Class II Type A1	1-3	Low		✓			✓		✓	✓	✓	✓					
Class II Type A2	1-3	Low		✓			✓		✓	✓	✓	✓					
Class II Type A2 Ducted	1-3	Low	✓	✓			✓	✓	✓	✓	✓	✓					✓
Class II Type B1	1-3	Low	✓	✓	✓		✓	✓	✓	✓	✓	✓					✓
Class II Type B2	1-3	Medium	✓	✓	✓		✓	✓	✓	✓	✓	✓	(1)				✓
Class III	1-4	Very Low	✓	✓	✓		✓	✓	✓	✓	✓	✓	(1)				

Notes (1) Potential for use with very small quantities of flammable materials such as ETOH.

© SEFA - 5th Edition Desk Reference - Version 3.0

Table 6 ECD Application Risk Matrix for other types of ECDs (1)

Other ECD Risk Matrix																		
ECDs	Hazard	Quantity	Generation	Chemical	Biological	Radioactive	Radioisotopes	Product Protection	Gas/Vapor	Particulate/Powder	Nanoparticle	Acute	Carcinogen	Flammable	Reactive	Corrosive	Explosive	Heated
Glove Box	High	Medium	Very Low	✓		✓		✓	✓	✓	✓	✓	✓					
Ventilated Enclosure	Low	Medium	Low	✓		✓		✓	✓	✓				✓	✓	✓	✓	✓
Ventilated Balance Enclosure	High	Low	Very Low	✓		✓		✓	✓	✓	✓	✓	✓					
Canopy Hood	Very Low	Low	Low	✓					✓									✓
Flexible Spot Exhaust	Low	Low	Low	✓					✓	✓				✓		✓		✓
Slot Hood	Low	Low	Low	✓					✓	✓				✓				✓
Downdraft Necropsy Table	Low	Medium	Low	✓					✓					✓				
Histology Station	Low	Medium	Low	✓				✓	✓					✓				
Ventilated Wet Bench	Mediu m	Medium	Medium	✓				✓	✓	✓		✓	✓	✓				✓
Gas Cabinet	Very High	Medium	Very Low	✓					✓	✓	✓	✓	✓	✓	✓	✓	✓	
Special Isolator	Very High	Very High	Very High	✓		✓	✓	✓	✓	✓	✓	✓	✓	✓	✓	✓	✓	✓

Notes: (1) Please note that there are can be exceptions to this guidance based on professional guidance and application

6 ECD TYPES, DESIGN, CONSTRUCTION AND OPERATION

ECDs serve as the primary means of protecting personnel and should be considered an integral part of the building HVAC system. ECDs must be manufactured, installed and operated per specific requirements and for specific applications. Selection of the appropriate ECD requires input and consultation with a variety of stakeholders including health and safety personnel, mechanical engineers, researchers, operations/maintenance and others. Considerations during the design process should include:

- User-specific needs identified during the Laboratory Demand Ventilation Assessment;
- The type of ECD needed to perform a specific operation;
- Specific containment and ECD size requirements; and
- Satisfactory performance testing of potential ECD/control-system configurations.
- Change Management

The following describes ECDs and potential applications.

6.1 Standard Laboratory Fume Hood

Description - Laboratory fume hoods are 4-sided enclosures designed to protect users from hazardous chemical substances. Fume hoods are accessed using a moveable sash at the front opening in which the user inserts his/her hands and arms. Safe fume hood operation is obtained through proper aerodynamic design, adequate face velocity and in the case of a variable air volume (VAV) hood; appropriate minimum flow with the sash closed and the impact of the lab environment. Fume hoods come in various sizes and configurations depending on the need of the user and the processes occurring within the hood. See Figure 8 for a diagram of a standard fume hood.

Applications - A fume hood's primary objective is to protect users from exposure to toxic fumes, vapors and gases. When used correctly, hte sash can provide additional protection against splashes, fires or minor explosions that may occur within the hood. Specialized fume hoods are necessary when working with radioisotopes and perchloric acid.

Limitations - Fume hoods should not be used for biohazard containment; refer to the section on Bio-Safety Cabinets when using hazardous or infectious biological agents. Also, fume hoods are not appropriate for the most highly hazardous airborne materials. Consider using a glove box or specialized containment enclosure where any exposure cannot be tolerated.

© SEFA - 5th Edition Desk Reference - Version 3.0

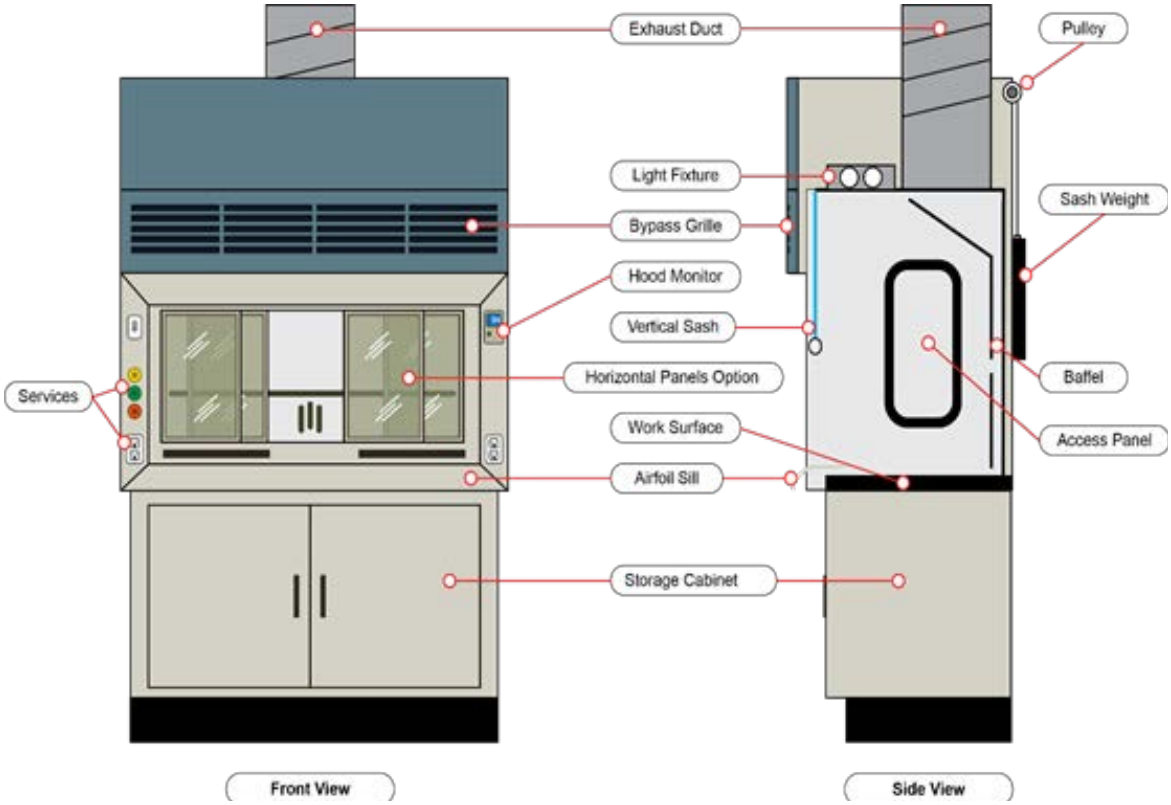

Figure 9 – Standard Laboratory Fume Hood Components

6.1.1 High Performance Fume Hood

Description - A high performance (HP) fume hood is a bypass fume hood operated at face velocities 30% to 40% less than traditional fume hoods. High performance fume hoods incorporate enhanced aerodynamic design features, particularly the airfoil sill, sash handle, side posts and baffles, that enable equivalent containment at reduced face velocities (as low as 60 fpm). The primary benefit of a HP fume hood is the reduction in total hood exhaust flow at the design opening and potential for reduced energy use while maintaining containment.

Applications - High performance fume hoods can be used in the same manner as a standard laboratory fume hood.

Limitations - The same limitations for standard fume hoods apply to high performance fume hoods.

6.1.2 Auxiliary Air Fume Hood

Description - An auxiliary air hood equipped with an air supply plenum mounted over the sash opening (See Figure 10). The auxiliary air supply is designed to direct either unconditioned, or in some cases conditioned or tempered outside air to the outside plane of the hood sash. The objective is to reduce fume hood energy consumption by reducing the volume of conditioned laboratory make-up air necessary for the hood to operate.

Applications - The commentary section in ANSI/AIHA Z9.5-2012 states, "Auxiliary supplied air hoods are not recommended unless special energy conditions or design circumstances exist."

Limitations – Same limitations as standard fume hoods with a greater possible risk of exposure due to the auxiliary air creating excessive turbulence in the breathing zone. Careful balance between exhaust flow and the auxiliary air flow is critical to maintain performance.

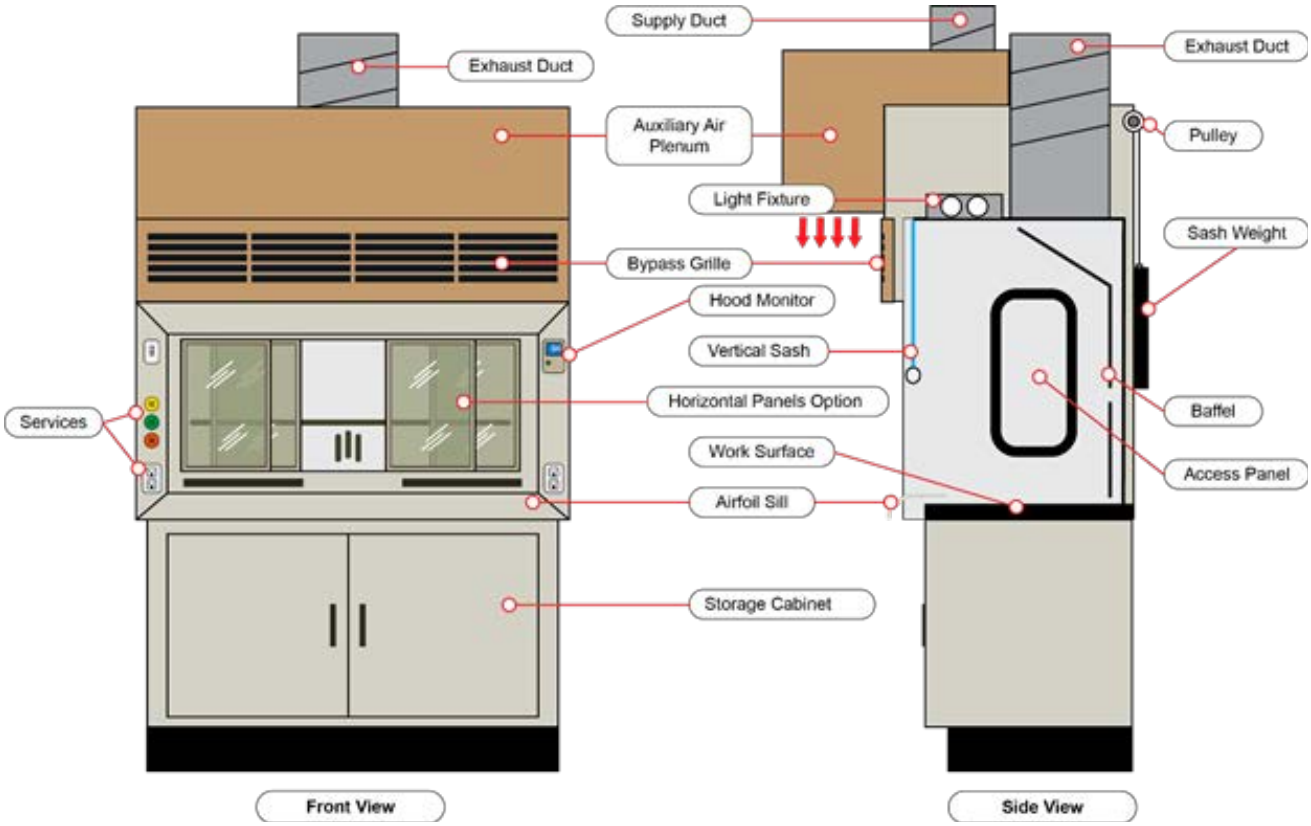

Figure 10 Auxiliary Air Fume Hood

6.1.3 Distillation Fume Hood

Description - Distillation hoods have many of the same components as a standard bench top hood but are constructed with a greater interior height for use with larger equipment and apparatus (See Figure 11). The hoods can be equipped with vertical rising sashes or horizontal sliding panels. Generally, if equipped with a vertical sash then more than one sash panel is used. The vertical sash design generally enables a larger opening than horizontal sash configurations.

Applications - Typically used for large distillation processes or large equipment and processes that won't fit inside of a standard fume hood.

Limitations - The same limitations for standard fume hoods apply to distillation fume hoods.

© SEFA - 5th Edition Desk Reference - Version 3.0

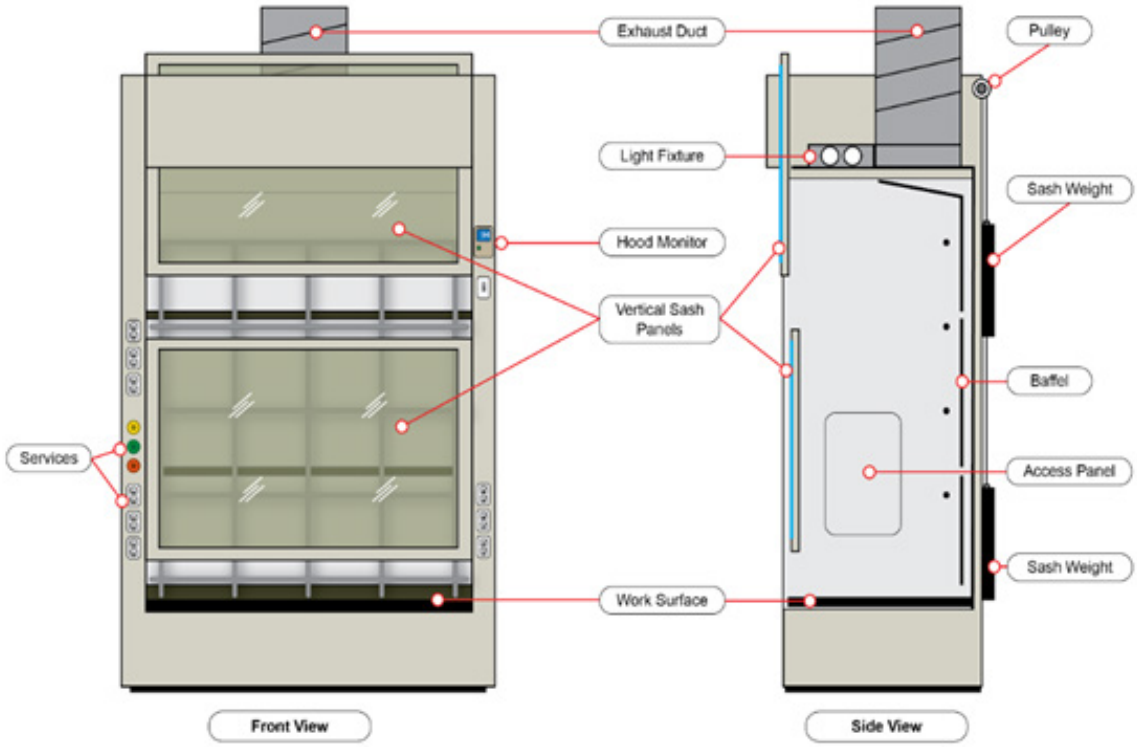

Figure 11 Distillation Fume Hood

6.1.4 Floor Mounted Fume Hood

Description - Floor mounted hoods, often inappropriately described as "walk - in" hoods, are used to accommodate large apparatus that cannot fit inside of a standard size fume hood. A floor mounted hood is designed so that large equipment can be "wheeled" into the hood if necessary. See Figure 12 for an example of a floor mounted fume hood.

Applications – Floor mounted fume hoods can be used in the same manner as a standard laboratory fume hood.

Limitations - The same limitations for standard fume hoods apply to floor mounted fume hoods.

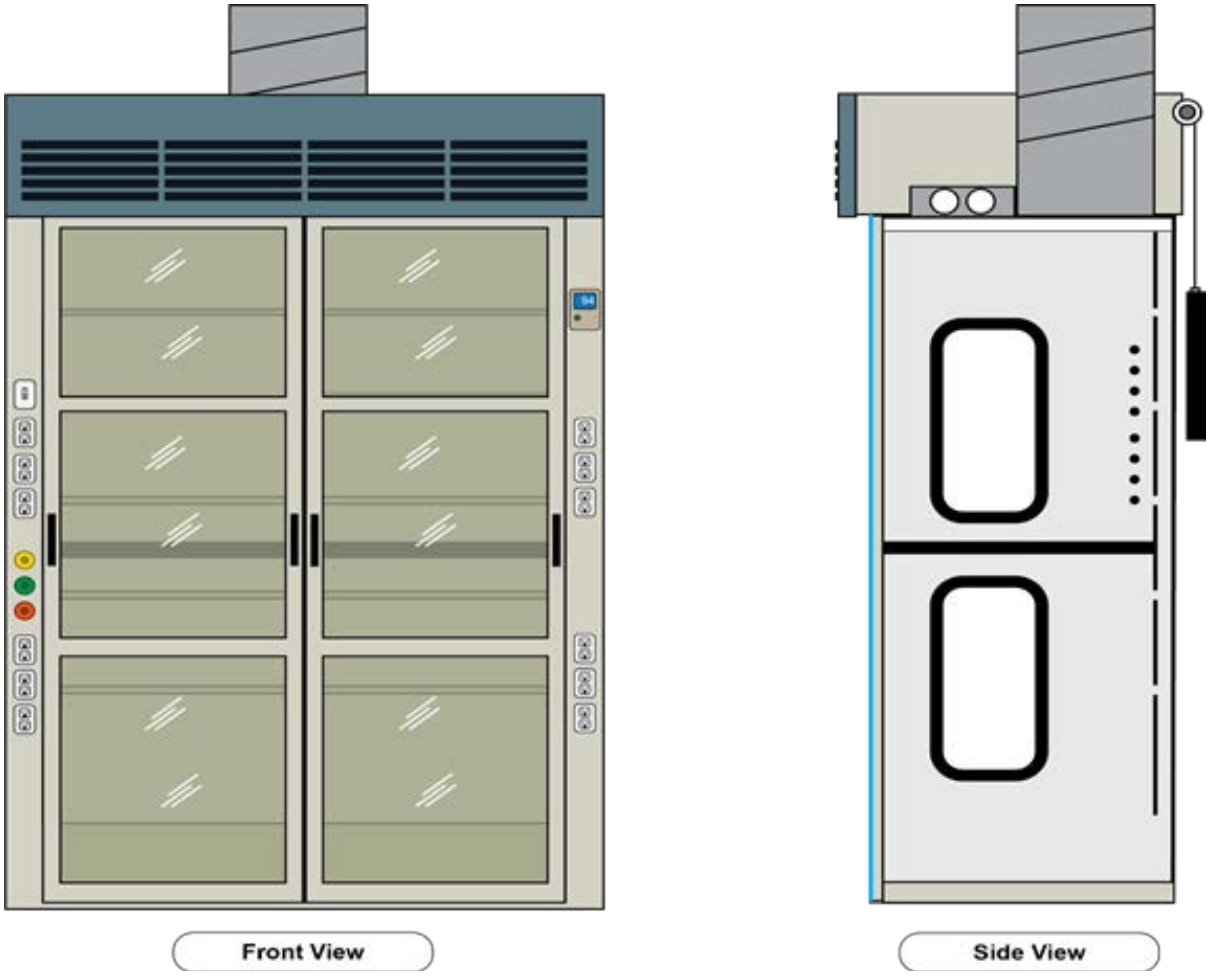

Figure 12 Floor Mounted Hood

6.1.5 Perchloric Acid Laboratory Fume Hood

Description - Perchloric acid fume hoods and their exhaust systems are specifically designed for perchloric acid applications and should not be used for other procedures (See Figure 13). Often made using 316 stainless steel, or type 1 PVC, perchloric hoods are equipped with water wash down systems to prevent accumulation of perchlorate salt deposits. A trough along the back of the work surface collects the water from the wash down system and is connected to an approved drainage system.

Applications - Used in laboratory processes that require perchloric acid to be heated or aerosolized.

Limitations - Should not be used in applications other than those requiring perchloric acid or with materials that may be reactive with perchlorates and potential residue.

6.1.5.1 Acid Digestion Laboratory Fume Hood

Description – Same as PVC Perchloric Acid Fume Hood in construction, except the sash material has been changed to Lexan in lieu of safety glass.

© SEFA - 5th Edition Desk Reference - Version 3.0

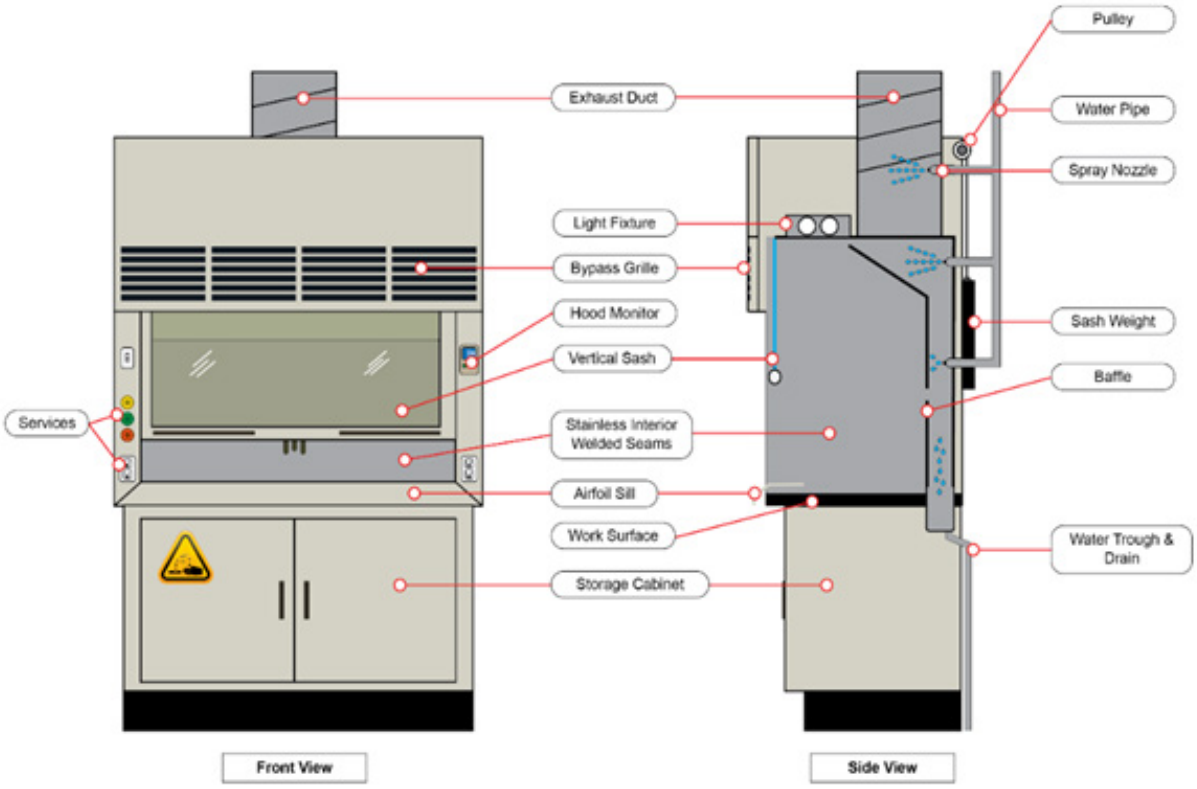

Figure 13 Perchloric Acid Fume Hood

Applications - Used for non-perchloric acid digestions with mineral acids.

6.1.6 Radioisotope Fume Hood

Description - Radioisotope hoods are constructed of solid, resistant materials to chemical agents and coved corners for easier decontamination. Normally, the external and internal surfaces are made of stainless steel or plastic resins (epoxy). The surfaces exposed to the radioactive material should be smooth and sealed at the essential junctions to prevent accumulation of radioactive particles and allow for easy cleaning and decontamination. See Figure 14 for an example of a radioisotope fume hood.

Applications - Radioisotope fume hoods are used to avoid radiation exposures of workers or researchers manipulating radioactive substances. Typical radioactive hoods should meet all requirements for constant volume bypass-type or VAV fume hoods and may or may not be equipped with HEPA filter systems.

Limitations - A radioisotope fume hood can be operated similarly to standard fume hoods, with special precautions for high radioactive concentrations.

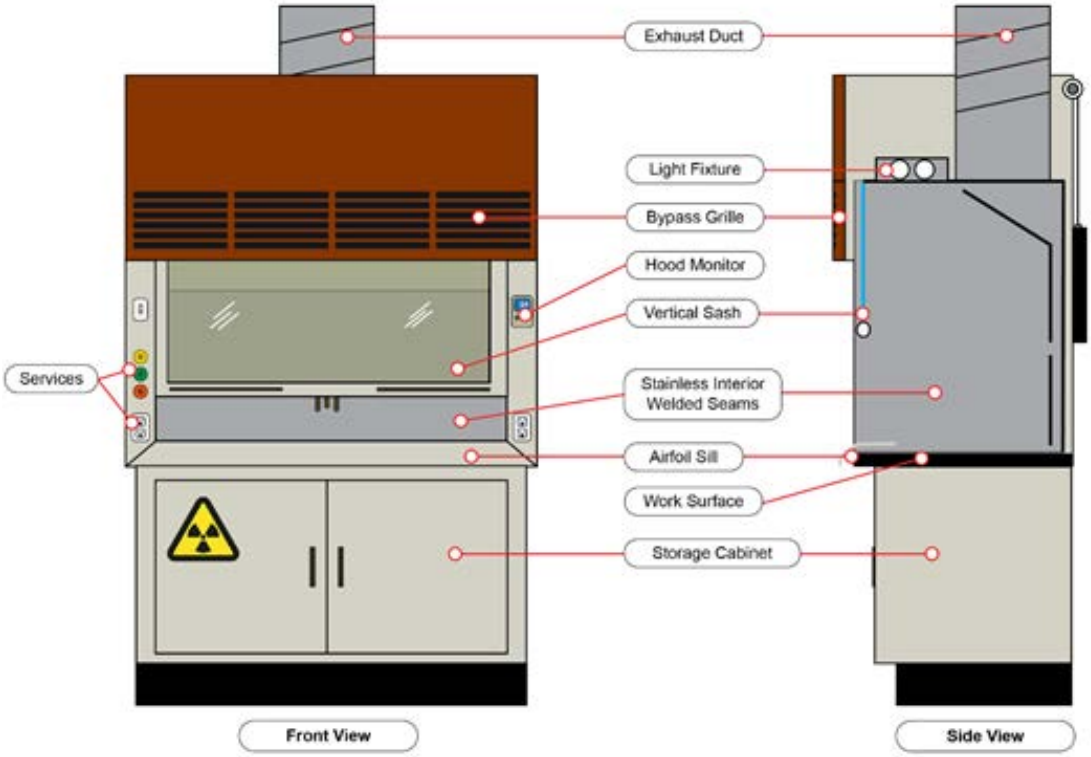

Figure 14 Radioisotope Fume Hood

6.2 Ductless "Filtered" Fume Hood

Description - A filtered fume hood is an enclosure equipped with filtrating technology that feature filters specific to the types of chemicals being utilized (See Figure 15). Air that enters through the opening of the device creates a barrier between the personnel and the chemicals. The integral ventilation system draws the particles and molecules towards the filtration system, preventing hazardous material from being released into the laboratory space. This filtration and release of the air into the lab space in some cases may help to refresh the ambient air in the lab.

Applications – Generally, filtered fume hoods can be used for specific processes that match up with the hood's filter type. Chemical process volumes are typically limited to 500 ml/s or less per chemical. Some hoods have the ability to monitor filter effectiveness or filter life.

Limitations – Filtered fume hoods require routine filter replacement dependent upon the type of filter and volume of chemical use in the hood. No extreme heating processes should be conducted within the hood. Hood use is restricted by type of filtration. Note that some materials cannot be adequately filtered and may even poison some filter media rendering it useless for other applications. Take careful note of the manufacturers installation, application and instruction for use and maintenance manuals.

© SEFA - 5th Edition Desk Reference - Version 3.0

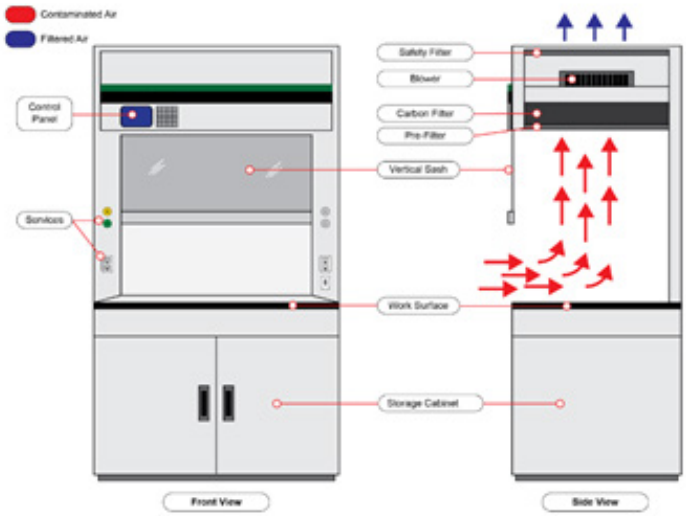

Figure 15 Ductless "Filtered" Fume Hood

6.3 Laminar Flow Clean Bench

Description - Also called clean benches, laminar flow hoods use HEPA filtered air to provide a sterile, contamination free environment for working with critical processes or products. Laminar flow hoods can provide either horizontal or vertical airflow depending on the design configuration. See Figure 16 for an example.

Applications - Often used for working with non-hazardous materials which require a clean, particle-free work area. These laminar flow clean benches are different than laminar flow fume hoods in that they only offer product protection where as a laminar flow fume hood can provide product protection and personnel protection by also capturing and exhausting airborne hazards.

Limitations - Laminar flow hoods do not offer personnel protection and are not designed for working with biological hazards, aerosols, or toxic chemicals.

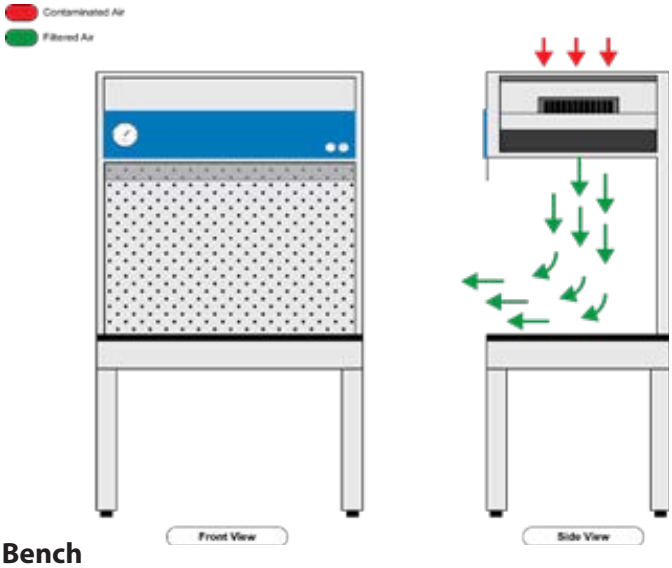

Figure 16 Laminar Flow Clean Bench

6.4 Biological Safety Cabinet (BSC)

BSC's are used to provide effective primary containment for work with pathogens. There are three classes of BSC: Class I, Class II and Class III. Selection of the proper class of BSC requires careful evaluation of the activities to be conducted in the device.

Biological safety cabinets shall meet minimum standards for cabinet classifications in NSF/ANSI STD 49: 2016 for personnel, environmental, and product safety and shall be listed and identified by a distinctive NSF seal. Field re-certification, performed by an NSF 49 accredited technician and conducted per the procedures outlined in NSF 49, will be required once the cabinet is installed. Cabinet classification shall be determined in consultation with the laboratory managers. These types of cabinets have special design requirements depending on their intended use including:

- Protecting personnel from harmful agents inside the cabinet.
- Protecting the product, experiment, or procedure from contamination by the laboratory environment, leading to invalidated test results.
- Protecting the laboratory environment from contaminants inside the cabinet.

6.4.1 Class I

Description - Class I cabinets have un-recirculated airflow away from the operator that is discharged to the atmosphere after filtration through a HEPA filter.

Applications - For use with BSL 1-3 agents. Provides operator protection but does not protect the material within the cabinet from contamination.

Limitations - Class I BSC's, provide environmental and personnel protection only. They do not provide product protection. Routine testing and replacement of HEPA filters is required. Flammable or explosive materials should not be used within biological safety cabinets.

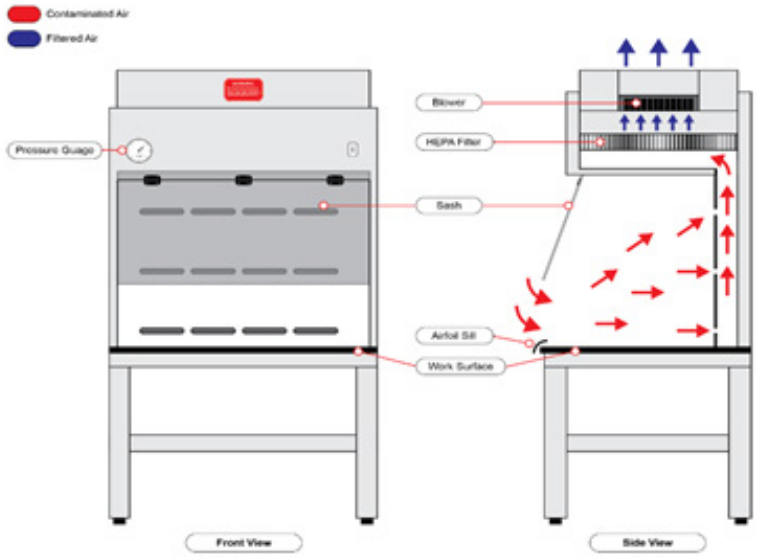

Figure 17 Class I Bio - Safety Cabinet

© SEFA - 5th Edition Desk Reference - Version 3.0

6.4.2 Class II, Type A1

Description – Approximately 70% of air is recirculated after passing through a HEPA filter; Approximately 30% is exhausted to the room after filtration.

Applications - Typically used for biosafety levels 1 – 3.

Limitations - Not suitable for low levels of volatile toxic chemicals. Routine testing and replacement of HEPA filters is required. Flammable or explosive materials should not be used within biological safety cabinets.

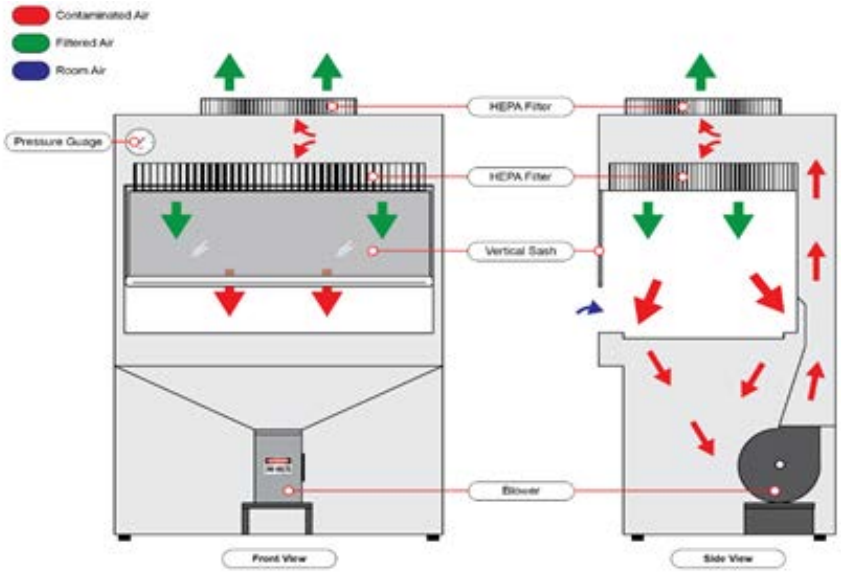

Figure 18 BSC Class II, Type A1

6.4.3 Class II, Type A2

Description – Approximately 70% of air is recirculated after passing through a HEPA filter; Approximately 30% is either exhausted to the room or building exhaust system after filtration (See Figure 19).

Applications - For use with low to moderate risk biological agents (biosafety levels 1 – 3). Type A2 can be used for work with small amounts of chemicals if vapors are non-hazardous, won't affect work due to recirculation, and cabinet is exhausted via building exhaust system.

Limitations - Routine testing and replacement of HEPA filters is required. Flammable or explosive materials should not be used within biological safety cabinets.

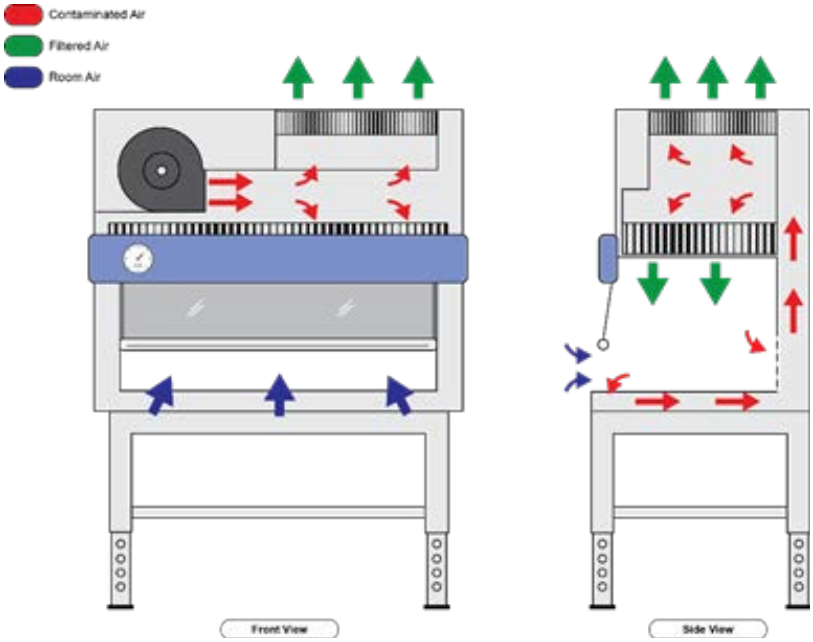

Figure 19

Class II, Type A2

6.4.4 Class II, Type B1

Description – Approximately 40% of air is recirculated after passing through a HEPA filter; Approximately 60% is exhausted into building exhaust system after filtration (See Figure 20).

Applications - For use with low to moderate risk biological agents (biosafety levels 1 – 3).

Limitations - Routine testing and replacement of HEPA filters is required. Flammable or explosive materials should not be used within biological safety cabinets.

Figure 20

Class II, Type B1

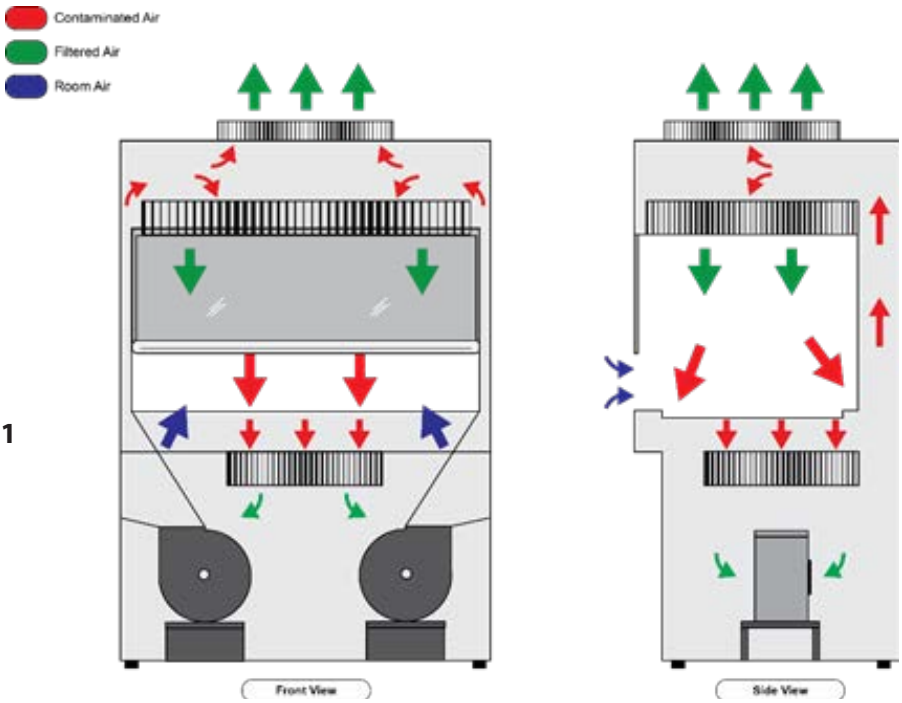

© SEFA - 5th Edition Desk Reference - Version 3.0

6.4.5 Class II, Type B2

Description - 0% of air is recirculated; 100% is exhausted into building exhaust system. See Figure 21 for an example of the airflow patterns for a B2 Cabinet

Applications - For use with low to high risk biological agents (biosafety levels 1 – 3) and volatile chemicals.

Limitations - Routine testing (at least annual) and replacement of HEPA filters is required when necessary. Flammable or explosive materials should not be used within biological safety cabinets.

Figure 21

Class II, Type B2

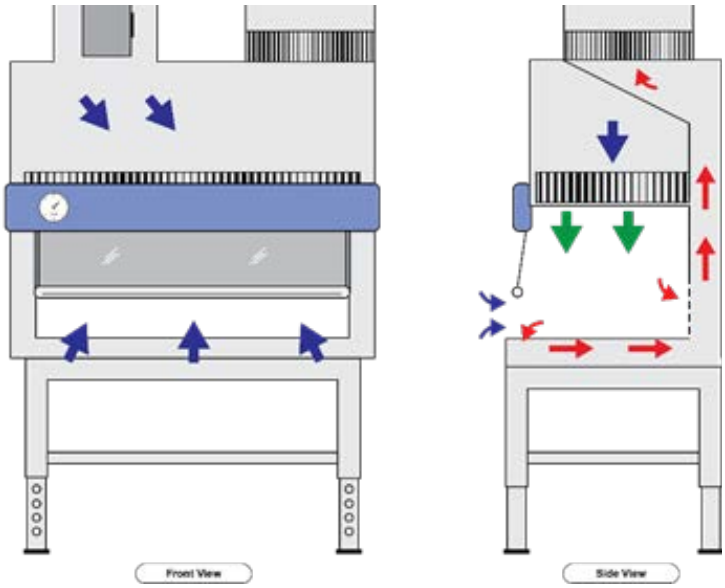

6.4.6 Class II, Type C1 BSCs

Description - Class II Type C1 BSCs have the following characteristics:

- They typically maintain an average minimum inflow velocity of 100 fpm through the work access opening, but the inflow velocity can vary depending on the risk and performance requirements;

- They have HEPA/ULPA filtered downflow air composed largely of uncontaminated recirculated inflow air;

- They exhaust contaminated downflow air from a region of the work area via an internal dedicated exhaust plenum and blower, and then through HEPA/ULPA filters(s);

- Have all biologically contaminate ducts and plenums under negative pressure or surrounded by negative pressure ducts and plenums; and

- May exhaust HEPA/ULPA filter air either back into the lab or via a canopy connection to an external system that exhausts to the atmosphere.

Applications - For working with low to high risk biological agents (biosafety levels 1 – 3) and volatile chemicals when connected to an external exhaust system.

6.4.7 Class III

Description - Class III biosafety cabinets are gas tight glove boxes designed for working with a variety of high risk materials/agents. The exhaust air must be double HEPA-filtered or HEPA-filtered and incinerated. The supply air can also be HEPA filtered as well.

Applications - For working with chemical carcinogens, high concentrations of low to moderate risk agents, highly infectious or hazardous materials.

Limitations - Often need to be custom built to meet exact use specifications. Require strict monitoring and filtering capabilities.

6.5 Glove Box

Description - Glove boxes are tightly sealed, fully enclosed systems often required to ensure total containment of chemical and biological contaminants where a separate atmosphere is desired. Built into the sides of the glovebox are gloves that the user can place their hands into the gloves and perform functions inside the box without breaking containment. See Figures 22 and 23 for examples of different glovebox configurations.

Applications - Two types of gloveboxes exist; one allows a person to work with hazardous substances and the other allows manipulation of substances that must be contained within a high purity inert atmosphere (such as argon or nitrogen). It is also possible to use a glovebox for manipulation of items in a vacuum chamber.

Limitations - Glove boxes have several parameters and performance criteria that must be set and monitored to ensure containment. These parameters include pressure, alarm set points for oxygen and moisture, filter leak tests, evacuation time for the antechamber and regeneration intervals.

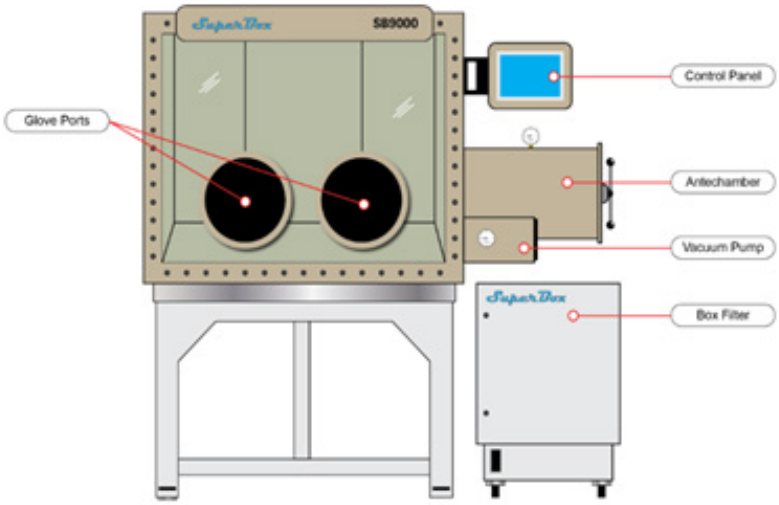

Figure 22

Glove Box

© SEFA - 5th Edition Desk Reference - Version 3.0

Figure 23

Photograph of Glove Boxes

6.6 Teaching Hood (Educational Hood)

Description - A teaching hood sometimes called a California hood, demonstration hood, or pass-through hood, are special fume hoods with viewing glass or sashes on multiple sides. The purpose of this hood is to allow full visibility of the processes being conducted in the hood. The hoods often are not equipped with baffles to keep the flow of air into the hood uniform across the sash opening.

Applications - Designed to allow students to view demonstrations as well as allowing teachers to supervise student use. Can be used to transfer chemicals from one room to another without leaving the fume hood.

Limitations - The same limitations for standard fume hoods apply to teaching fume hoods. Use with only one of the two sashes open at one time.

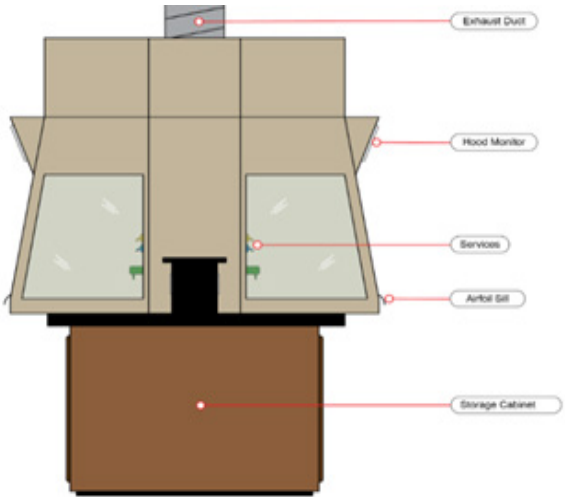

Figure 24 California Hood - Teaching Hood

6.7 Ventilated Safety Enclosure (VSE)

Description - Ventilated enclosures are typically smaller than standard fume hoods and can usually be placed on a countertop or benchtop surface. Ventilated enclosures can be ducted into an existing building exhaust system or in certain applications, non-ducted models exhaust HEPA filtered air back into the lab space.

Applications - A ventilated enclosure is suitable for operations that are largely unattended but will emit small volumes of potentially hazardous materials or excessive heat.

Limitations - The same limitations for standard fume hoods apply to ventilated enclosures. Filtered units require routine filter testing and maintenance.

Figure 25 Ventilated Safety Enclosure

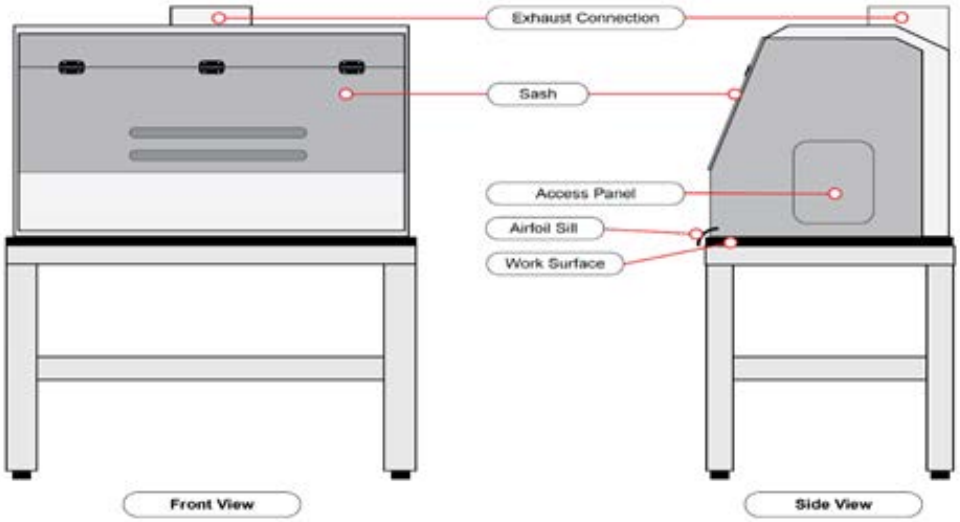

Figure 26 Photograph of

Ventilated Equipment Enclosure

© SEFA - 5th Edition Desk Reference - Version 3.0

6.7.1 Ventilated Balance Enclosure (VBE)

Description - While similar in design to standard ventilated enclosures, VBE's provide exceptional containment characteristics along with a turbulence-free environment necessary for weighing of materials and compounds. They are typically transparent and operated at lower face velocities than chemical lab hoods to reduce balance disturbance and loss of material.

Applications - VBE's are specifically designed for providing exposure protection during the weighing and handling of potent materials and compounds.

Limitations - The same limitations for standard fume hoods apply to ventilated balance enclosures. Filtered units require routine filter testing and maintenance.

Figure 27

Ventilated Balance Enclosure

6.8 Canopy Exhaust Hood

Description – Typically built using corrosion resistant materials, canopy hoods are usually wall or ceiling mounted. They are hard ducted into the building's ventilation system and are comprised of a large, typically rectangular metal opening.

Applications - Canopy exhaust hoods are receiving hoods provided for the removal of steam, heat and negligible hazards from specific laboratory apparatus such as furnaces, ovens, and sterilizers**.**

Limitations - Should not be used for personal protection. Not for removing hazardous fumes or vapors.

Figure 28 Canopy Hoods

6.9 Flexible Spot Exhaust (FSE)

Description - Flexible Spot Exhaust or snorkel ducts, consist of a bell mouth and articulated connection to the building exhaust system.

Applications - Best used to remove fumes or heat from laboratory instrumentation or processes not appropriate for conduction inside a fume hood or other ventilated enclosure such as gas chromatographs and other analytical bench-top instrumentation with potential for low volume discharge of low hazard materials.

Limitations - FSE's have limited capture effectiveness and application must be limited to point source generation. The capture effectiveness is a function of the proximity to the contaminant source and the design of the hood inlet. Successful FSE bench applications are highly specific to the mass of the contaminant and the velocity and angle of emission.

Figure 29 Flexible Spot Exhaust

© SEFA - 5th Edition Desk Reference - Version 3.0

6.10 Slot Hood

Description - Slot hoods are typically wall mounted, hard ducted exhaust devices constructed of either metal or plastic slots.

Applications – Commonly used in darkrooms and acid dipping operations.

Limitations - Slot hoods provide a limited range of capture. In addition, the orientation of the user with respect to the opening can also influence capture. Locate a slotted hood so that the direction of airflow does not create significant eddy zones or low pressure areas that could bring concentrations into the breathing zone of the operator.

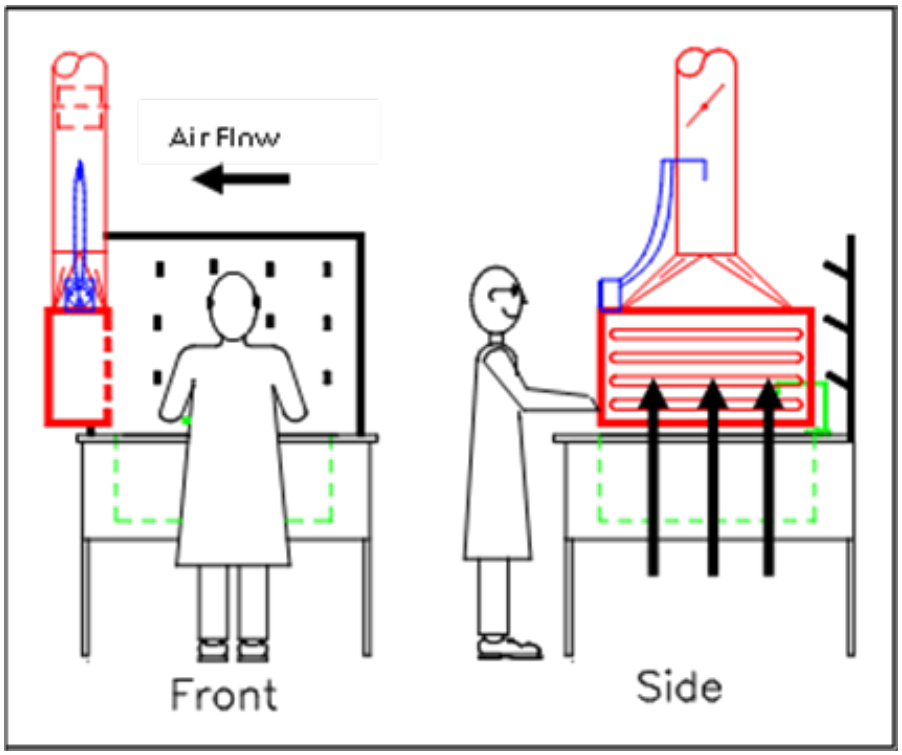

Figure 30

Slot Hoods

6.11 Downdraft Table (Necropsy Table, Histology Station)

Description – Downdraft tables are ventilated tables which allow unobstructed top access while limiting release of chemicals and odors into the lab space. Downdraft tables protect personnel and the working environment by drawing contaminated air away from the work area. The workstation operates under negative pressure to exhaust fumes, aerosols and the other chemical irritants or odors through a properly configured exhaust system.

Applications - Downdraft tables provide protection during animal necropsies, surgeries, specimen dissections, gross dissections/tissue grossing, perfusions and preparation of histological slides as well as other histology work. A histology station, also known as a tissue grossing station, is a ventilated work bench designed for surgical and medical experiments. These stations are composed of a sink, removable perforated dissecting trays that create downdraft exposure control and a ventilation connection for the station to be hard ducted into the building's ventilation.

Limitations - Limited by low containment capabilities and generally not recommended for use with high hazard chemicals and compounds unless capture effectiveness is tested and confirmed.

Figure 31 Downdraft Necropsy Table

6.12 Ventilated Wet Bench

Description - Ventilated wet benches are typically enclosed and hard ducted to the building's exhaust system and are manufactured from polypropylene or stainless steel. Some benches are equipped with a vertical sash depending on the application and some may also be equipped with sinks. Wet benches operate with a cross flow exhaust system to draw hazards away from the user. See Figure 32 for a photo of a ventilated wet bench.

Applications - A ventilated wet bench can be used for both semiconductor industrial processes as well as medical processes.

Limitations - Containment capabilities may be subject to design and should not be used for work with high hazard chemicals and compounds where performance is not tested and confirmed.

Figure 32

Ventilated Wet Bench

© SEFA - 5th Edition Desk Reference - Version 3.0

6.13 Wet Process Workstation

Description - WPS provide protection for personnel from large scale acid and solvent usage. Unlike conventional chemical fume hoods, WPS have full-unit-width under-worksurface exhaust plenum/ spill containment tubs, allowing for large volumes of heated process chemical baths to be recessed down under work surface, with fumes captured locally and brought down and away under the station work surface, and out rear exhaust. WPS are typically placed in cleanrooms or clean labs due to critical processes performed within, so also provide process protection due to unique station physical design which allows work surface to be 'washed' by HEPA filtered air above. WPS may have vertically or horizontally closing sashes, or hinged eye shields with fixed access openings. WPS often have some degree of automation incorporated into functionality.

Applications - Critical parts processing with acid, base, and solvents, often at elevated temperatures for semiconductor processes, electronics manufacturing, Biomedical, nanotech, medical devices, military, aerospace and other critical processes.

Limitations - Due to larger scale of chemical use in WPS, adequate chemical waste must be planned for. Most WPS have onboard waste systems, each dedicated to particular waste stream used in WPS, with materials of construction carefully selected for compatibility with precise chemistry, concentration, and temperature to be contained. Multi levels of safety interlocks must be included in WPS or otherwise station use should be limited to lower volumes of usage more similar to a chemical fume hood.

Figure 33 Wet Process Workstations

6.14 Hazardous Gas Storage Cabinet

Description - Typically constructed of metal and approximately five-feet tall, the hazardous gas storage cabinets are used to house compressed cylinders. There is often a glass window constructed on the top of the cabinet to view the gas containers inside.

Applications – Storage in these cabinets can include; corrosive solids or liquids, toxic liquids or solids, flammable solids or liquids, organic peroxide formulations, oxidizer solids or liquids, pyrophoric solids or liquids, toxic or highly toxic solids or liquids, unstable solids or liquids, water-reactive solids or liquids. These cabinets can be required by fire codes to increase the maximum allowable quantities, separate incompatible materials, and should be locked to prevent unauthorized access. For further information refer to SEFA 11 – 4.2

Limitations - Leak detectors and low-exhaust flow alarms, as well as a gas purge system, should be

required to provide for safe exchange of cylinders.

6.15 Flammable Liquid Storage Cabinet

Design and Construction – Venting of storage cabinets is not required for fire protection purposes, but venting may be required to comply with local codes or authorities having jurisdiction. Non-vented cabinets should be sealed with the bungs supplied with the cabinet or with bungs specified by the manufacturer of the cabinet. If cabinet venting is required, the cabinet should be mechanically vented to the outside and:

- Both metal bungs must be removed and replaced with flash arrestor screens (normally provided with cabinets). The top opening serves as the fresh air inlet.

- The bottom opening must be connected to an exhaust fan by a length of rigid steel tubing that has an inside diameter no smaller than the vent opening.

- The fan should have a non-sparking fan blade and non-sparking shroud.

- The cabinet should exhaust directly to the outside (the cabinet should not be vented through the fume hood).

- The cabinets should be conspicuously marked, "Flammable - Keep Fire Away."

Application - Used to organize and store flammable liquids in approved closed containers. To guard liquids from their auto ignition temperature of the liquids stored in the event of a fire. Flammable Liquids storage cabinets are often used to increase the maximum allowable quantities, to separate incompatible materials, and should be locked to prevent unauthorized access. For further information refer to SEFA 11 – 4.1

Operation - The operating specifications for these cabinets include flow, static pressure and containment.

6.16 Special Purpose Devices

Special purpose hoods are defined as any hood that does not conform to the specific types described above. Special hoods may be used for operations for which other types are not suitable (e.g., robot sampling equipment, liquid nitrogen dewars, ETO sterilizers). Other applications might present

© SEFA - 5th Edition Desk Reference - Version 3.0

Figure 34

Ventilated Flammable Gas Cabinets

opportunities for achieving contamination control with less bench space or less exhaust volume (e.g., using the hoods as special mixing stations, evaporation racks, heat sources, or ventilated worktables).

7 ECD SYSTEM MANAGEMENT PLAN

ECD systems are complex, costly to install, and require diligent efforts to select, operate, maintain and ensure proper use and application. Installation of ECD Systems can be associated with 15% to 30% of the costs to construct a laboratory building and their operation often accounts for as much as 60% to 80% of annual energy consumption and utility costs. Depletion of energy resources and resultant increase in energy costs advocates for efficient energy use as a prominent, but secondary criterion to lab safety. Finally, significant time and effort are required from numerous stakeholders including laboratory personnel, EHS, facilities engineering, facilities maintenance, management, and outside contractors to ensure proper performance and provide safe, productive, energy efficient and sustainable laboratories.

Failure to properly select, design, operate, use and maintain ECD systems may:

Increase the potential for unacceptable impact to the health of people;

Increase potential for harm to the environment;

Increase potential for premature degradation of the ECDs;

Increase potential for loss of productivity and operational efficiency;

Increase unnecessary energy consumption and operating costs;

Increase the risk of non-conformance with regulatory and industry standards; and

Increase the risk of liability.

7.1 ECD Management Program Description

To help ensure that a framework exists for organizations to provide safe and efficient operation of laboratory ventilation systems, the ANSI/AIHA Z9.5-2012 American National Standard for Laboratory

Ventilation requires laboratory facilities to implement a Lab Ventilation Management Plan (LVMP). The LVMP is intended to ensure proper design, operation, and maintenance of lab ventilation systems. In this document, an ECD Management Program serves as the equivalent of an LVMP and should be implemented where hazardous airborne contaminants may be found in laboratory environments. The following elements should be included in a written ECD
Management Program:

Program management and stakeholder coordination;

Risk assessment process to understand and characterize the airborne hazard, associated risk, and level of protection required;

ECD selection process;

ECD system design and operating specifications;

Performance testing to validate and verify proper performance of the ECD system prior to use with hazards (sometimes referred to as commissioning);

Maintenance and routine testing program in compliance with THE MAINTENANCE PLAN;

Training for all stakeholders including users operating ECDs and personnel involved with selection, design, operation, maintenance and testing of ECDs;

Management of Change process capable of ensuring ECD systems remain appropriate for the hazardous processes and provide proper performance;

Documentation and recordkeeping; and

Review and revise annually or as necessary to maintain relevance and use.

The elements of the ECD Management Program are shown in Figure 35 below.

Figure 35 - Elements of a Comprehensive ECD Systems Management Program

© SEFA - 5th Edition Desk Reference - Version 3.0

7.2 Program Management and Stakeholder Coordination

Responsibilities for implementation and execution of the ECD Management Program are at the discretion of the facility management. Depending on the number and type of ECDs, risk associated with the applications and complexity of the systems; the responsibilities for execution of the tasks of the ECD Management Program may be assigned to one or more stakeholder groups including Environmental Health and Safety (EHS), Facility Engineering, Facility Managers, Lab Managers and Lab Professionals.

A responsible person or ECD program coordinator should be available for overseeing the ECD Management Program and should review the program regularly (usually annually) and its implementation. Control of frequency, execution, documentation, and records of all tasks and services should be included in the site ECD Management Program.

7.2.1 Hazard Emission Risk Assessment

The risk assessment process should be developed to identify and characterize the hazards and procedures that may lead to the need for an ECD System. This information defines the hazard emission scenario for determining the required performance criteria (acceptable level of control) and selecting an appropriate ECD system. The emission scenario shall indicate the type of airborne contaminant, the characteristics of the airborne contaminant's concentration (e.g. gas, vapor, particulate, or other aerosol), the quantity of material used in the process, and the potential method and rate of generation.

7.2.2 Selection of ECD's

Where the risk assessment process indicates a need for an ECD due to a hazardous airborne contaminant, the ECD system selected for use must be appropriate for the hazard emission scenario and capable of meeting the required performance criteria under normal and expected operation conditions. This may or may not be effective for a catastrophic event and this should be taken into account when selecting an ECD System.

An inventory and description of the types and application of site specific ECDs should be included as part of the ECD Management Program.

7.2.3 ECD Design and Operating Specifications

The ECD system must be designed and have the attributes appropriate to achieve the required performance criteria when operated in accordance with the established operating specifications. The requirements for design, construction and operation of the ECD systems shall be included in the ECD Management Program and align where applicable with relevant industry standards (e.g. SEFA, ANSI etc). The operating specifications for all commercially manufactured, pre-engineered or custom designed ECD systems must be provided by the manufacturer or determined by the assigned stakeholder.

The operation of the ECD system must be monitored and there must be a means to notify ECD users and other stakeholders when the ECD systems fail to operate within the operating specifications and tolerances necessary for proper performance. Where possible, the systems must be designed and operated to minimize energy consumption, but at no time can energy efficient operating modes adversely affect performance and the ability to protect users.

7.2.4 ECD Performance Verification

All ECD systems must be tested following installation and prior to use with hazardous processes. The performance tests shall verify that the ECD systems are operating in accordance with the specifications

and meet the required performance criteria. The performance tests must be appropriate for the ECD system and conform to relevant site standards and guidelines. Proper performance of the ECD system must be verified under all possible modes of operation and the prevailing operating conditions, associated specifically with the laboratory environment and the ventilation systems must be determined and documented.

All ECD systems should be subject to re-tests to verify performance following any major change to the configuration of the ECD, physical design of the laboratory, physical design of the ventilation systems or changes in airflow specifications that could impact performance. The extent of the modifications that justify the need for tests to verify performance should be included in the ECD Management Program.

7.2.5 Maintenance and Routine Testing

All ECD Systems should be maintained according to a Maintenance Plan. The Maintenance Plan includes provision for preventative maintenance and tests to verify that all components are in good working order and operating in accordance with specifications that prevailed at the time of the original commissioning. The maintenance procedures should be appropriate for the ECD systems and cover all operating modes. The procedures should be conducted on a defined frequency to identify and rectify operational deficiencies before performance of the ECDs are compromised.

All maintenance activities and routine tests should be conducted and documented in accordance with applicable standards. The individual standards for maintenance and testing of each type of ECD should include requirements for test equipment, calibration, procedures and training of personnel required to execute the maintenance and testing. All systems, components, labs and ECDs should be evaluated at least annually or as frequently as indicated in the maintenance program to maintain performance within acceptable tolerances. Requirements for verifying proper function of all monitors and alarms should also be included in the ECD Maintenance Program.

7.2.6 Training of Personnel

The continuous training of personnel is critical for the successful implementation and operation of an ECD program. All stakeholders involved in the ECD Management Program including safety, facility operators, lab managers and laboratory associates should receive initial and periodic training to ensure the safe and efficient operation of the ECD Systems. Individual stakeholders should also receive training specific to their responsibilities. A training course should be required for all users and cover work practices, operational capabilities and performance limitations of the ECD systems.

Following initial training, the effectiveness of training and need for refresher training should be evaluated annually or as needed to demonstrate conformance with the ECD Management Program. All stakeholders should be alerted to any changes that may have occurred to application or operation of the ECD systems.

Training topics need to be both general in nature to provide an overview of the ECD management process and describe employee responsibilities and more specific with targeted training as required for the sub-groups of stakeholders. Training should be provided for:

- Facility Managers
- HVAC and Controls Engineers
- Building Operators and Maintenance

© SEFA - 5th Edition Desk Reference - Version 3.0

- Environmental Health and Safety Managers
- Lab Managers
- Researchers.

7.2.7 Management of Change

While systematic implementation of maintenance, testing and reporting is important, the methods by which changes to the systems or changes to the procedures are handled can be even more critical. The ECD Management Program should include or reference relevant Management of Change plans and include a process or processes wherein changes in use of the ECD's systems are considered.

The Management of Change plan should cover modifications to ECD systems, operating specifications and performance requirements. Maintenance, testing and reporting requirements should reflect the implemented changes. The Management of Change plan associated with the ECD Management Program should include a sample structure of personnel, departments and other various interests that are critical to the Management of Change process.

Initiated Change: An initiated change occurs when an individual or department seeks a modification to the laboratory ventilation system. Initiated changes should follow the MOC process and return to risk assessment and evaluation of hazardous procedures.

Reactive Change: A reactive change is in response to an unplanned change, such as equipment or component failure. This type of change may require an expedited approval process due to immediate concerns for safety and possible damage to the ventilation system. Incidents should be well documented as well as evaluated for prevention of future issues.

The MOC program establishes accountability by providing the procedures and a system of checks and balances to fully document changes that may affect the ECD System. MOC procedures can be conducted any number of ways such as: paper forms, electronic forms, online database system, mobile phone application, etc. These procedures can be summarized as follows:

- Assess conditions that have changed
- Request for ECD change or change to operating environment that might impact performance of the ECD
- Informal review
- Detailed evaluation
- Approval
- Planning and updates
- Implementation
- Follow-up

7.2.8 Documentation and Record Keeping

Documentation describing the location and types of ECDs, descriptions of systems, engineering drawings, flow specifications, commissioning results, maintenance efforts and routine test results should be stored, readily accessible and remain up to date. The location of the documents and records should also be specified as part of the ECD Management Plan. Although not an inclusive list, the records and documents should include:

- Basis of Design Documents and As-built drawings;
- Commissioning reports;
- Testing and Air Balance reports;
- Results of "As installed" and Periodic Routine Test reports;
- Maintenance logs; reported problems and corrective actions;
- System modifications including equipment replacement or changes in operational specifications, flow set points or sequences of operation.

7.3 Responsibilities for the ECD Management Program

It is up to a laboratory's management to provide leadership, allocate resources and assign responsibilities for overseeing and executing tasks of the ECD Management Program. The Table below provides a list of responsibilities recommended for assignment to one or more stakeholder groups such as Environmental Health and Safety (EHS), Facility Engineering, Facility Maintenance, Lab Personnel, Purchasing and Space Planning.

© SEFA - 5th Edition Desk Reference - Version 3.0

Group or Department	Suggested Responsibility
Head of R & D Operations, Lab Managers, Reserarchers and ECD Users	• Provide information on use of hazardous materials; • Provide information about procedures, work practices, duration of use, changes in hazardous operations and materials etc; • Provide information and participate in ensuring appropriate safety systems are available; • Provide notification of any ECD Systems which are not operating properly; • Utilize ECD Systems in accordance with operating requirements and safety guidelines; • Provide notification of changes in the work activities or to the laboratory which may necessitate a change, repair, modification of, addition to or removal of ventilation equipment; • Follow the guidelines in the Management of Change for any modifications to laboratory equipment, operations or procedures; and • Follow all safety and health procedures associated with the safe operation of ECD Systems; attend all required health and safety trainings assigned relative to job function and activities performed.
Environmental Health and Safety (EHS)	• Assist researchers with recognition and evaluation of hazards; • Establish control objectives, safety requirements and suitable control strategies; • Assist with selection of the appropriate ECD systems to ensure adequate protection for personnel and the environment; • Assist with ensuring testing protocols of ECD systems are being properly performed, and routine testing and certification dates are being enforced; • Review and provide written final acceptance of testing of ECD systems before use and following periodic tests to verify proper operation; • Communicate findings of testing protocols; • Maintain records associated with testing ECD Systems; and • Assist with review of proper work practices and safety training

Group or Department	Suggested Responsibility
Facility Engineering and Facility Maintenance	• Ensure ECD systems have the capability to provide safe, dependable and efficient operation; • Ensure proper design, installation, and commissioning of systems; • Maintain up-to-date system documentation; • Ensure all stakeholders understand the operation, capabilities, limitations and testing requirements of the ECD systems; • Ensure testing protocols of ECD systems are being properly performed and routine testing dates are being enforced; • Provide notification of scheduled testing of ECD systems; • Periodically inspect the entire ECD system; • Perform preventative and repair maintenance as necessary to ensure proper operation of the ECD systems; • Identify, report and document deficiencies and the required repairs / modifications to fix the deficiency. Such inspections should be integrated and documented as part of the maintenance plan; and • Perform, or arrange to be performed, all necessary repairs / modifications to any equipment which affects the ECD system's ability to meet performance requirements.
Purchasing	• Ensure ECD systems are approved prior to purchase; and • Work with stakeholders to establish purchase requirements for ECD systems to promote standardization.
Space Planning	• Ensure safety and engineering issues are considered in any space allocation decisions.

© SEFA - 5th Edition Desk Reference - Version 3.0

8 References Sources

- ACGIH - Industrial Ventilation: A Manual of Recommended Practice for Design
- ACGIH - Industrial Ventilation: A Manual of Recommended Practice for Operation and Maintenance, 2007
- ANSI/AIHA® Z9.5 – 2012 American National Standard for Laboratory Ventilation
- ANSI/ASHRAE 110 – 2016 – Method of Testing Performance of Laboratory Fume Hoods
- ASTM F 1412-16 (American Society for Testing and Materials) Standard Specification for Polyolefin Pipe and Fittings for Corrosive Waste Drainage Systems
- EN 14175-3 March 2004 - Fume Cupboards Part 3: Type test methods
- EN 14470-1 - Safety Cabinet Standard for Flammable Products
- IBC International Building Code
- IFC International Fire Codes
- National Environmental Balancing Bureau (NEBB) 2009 - Procedural Standards for Fume Hood Performance Testing
- NFPA 30 2015 Flammable & Combustible Liquids Code
- NFPA 91 2015 Standard for Exhaust Systems for Air Conveying of Vapors, Gases, Mists and Combustible Particulate Solids
- NFPA 45 2015 Standard on Fire Protection for Laboratories Using Chemicals
- NFPA I 2015 Fire Code
- NSF/ANSI 49 – 2016 Biosafety Cabinetry: Design, Construction, Performance, and Field Certification
- OSHA 29 CFR 1910.106 Flammable Liquids
- Prudent Practices in the Laboratory: handling and management of chemical hazards - 2011
- PWGSC 15128 Laboratory Fume Hoods – Guidelines for Building Owners, Design Professionals, and Maintenance Personnel
- PWGSC 15129 Perchloric Acid Fume Hoods and Their Exhaust Systems
- UL 1275 Standard for Flammable Liquid Storage Cabinets
- SEFA Desk Reference 5th Edition

9 Relevant Organizations

SEFA recognizes and acknowledges the importance of government agencies that produce documents concerning laboratory ventilation, laboratory fume hoods and laboratory safety. These agencies include:

AABC Associated Air Balance Council
1000 Vermont Avenue, NW, Washington, DC 20001
www.aabc.com

ACGIH American Conference of Governmental Industrial Hygienists
1 330 Kemper Meadow Drive, Cincinnati, Ohio 45240
www.acgih.org http://www.acgih.org,
(513) 742-2020

ADC Air Diffusion Council
230 North Michigan Avenue, Chicago, IL 60601
www.flexibleduct.org

AGA American Gas Association
1515 Wilson Blvd., Arlington, VA 22209
www.aga.com

AGC Associated General Contractors of America
1957 E. Street, NW , Washington,DC 20006
www.agc.org

AGS American Glove Box Society
P. O. Box 9099, Santa Rosa, CA 95405
www.gloveboxsociety.org
(800) 530-1022

AHA American Hardboard Association
1210 W. Northwest Highway, Palatine, IL 60067-1897
www.domensino.com/aha/
(847) 934-8800

AIA The American Institute of Architects
1735 New York Ave. NW Washington, DC 20006
www.aia.org
(202) 626-7300

AIHA American Industrial Hygiene Association
2700 Prosperity Ave., Suite 250, Fairfax, VA 22031
www.aiha.org
(703) 849-8888

AMCA Air Movement & Control Association International, Inc.
30 W. University Drive Arlington Heights, IL 60004-1893
www.amca.org
(847) 394-0150

© SEFA - 5th Edition Desk Reference - Version 3.0

ANSI American National Standards
Institute 1 1 West 42nd Street 13th Floor, New York, NY 10036-8002
www.ansi.org
(888) 267-4683

AHRI Air Conditioning, Heating, and Refrigeration Institute
4301 Fairfax Drive, Suite 425, Arlington, VA 22203
www.ari.org
(703) 524-8800

ASCE American Society of Civil Engineers
World Headquarters - 1801 Alexander Graham Bell Drive Reston, VA 20191-4400
www.asce.org
(800) 548-2723

ASCET American Society of Certified Engineering Technicians
P. O. Box 1348, Flowery Branch, GA 30548
www.ascet.org
(777) 967-9173

ASHRAE American Society of Heating, Refrigerating and Air Conditioning Engineers
1791 Tullie Circle, NE, Atlanta, GA 30329-2305
www.ashrae.org
(800) 527-4723 - (404) 636-8400

ASME American Society of Mech. Eng.
345 East 47th Street New York, NY 10017-2392
www.asme.org
(800) 843-2763 (US and Canada)
011-800-843-2763 (Mexico)
(973)822-1 170 (Outside NA)

ASPE American Society of Plumbing Engineers
3617 Thousand Oaks Blvd., Suite 210, Westlake Village, CA 91362
www.aspe.org
(805) 495-7120

ASSE American Society of Sanitary Engineering
28901 Clemens Road, Westlake, OH 44145
www.asse-plumbing.org
(440) 835-3040

ASTM American Soc of Testing & Materials
100 Barr Harbor Drive West Conshohocken, PA 19428-2959
www.astm.org
(610) 832-9500

BSI British Standards Institution
389 Chiswick High Road, London W4 4AL United Kingdom
www.bsi-global.com
+44 -8996 9000

CALOSHA California Division of Occupational Safety and Health
455 Golden Gate Avenue 10th Floor San Francisco, CA 94102 www.dir.ca.gov/dosh
(800) 963-9424 — (916) 274-5721

CDC Center for Disease Control and Prevention
1600 Clifton Road, Atlanta, GA 30333
www.cdc.gov
(404) 639-3311

CSI Construction Specification Institute
99 Canal Center Plaza, Suite 300, Alexandria, VA 22314
www.csinet.org
(800) 689-2900

CETA Controlled Environmental Testing Association
3801Lake Boone Trail, Suite 1900, Raleigh, NC 27607
www.cetainternational.org
(919) 792-6339

CSA Canadian Standards Association
5060 Spectrum Way, Suite 100, Mississauga, Ontario L4W 5N6 www.csa.ca
(800) 463-6727

DIN German National Standard
DIN Deutsches Institut füür Normung e. V. 10772 Berlin, Germany
www.din.de

EJCDC Engineers' Joint Contract Documents Committee
American Consulting Engineers Council
1015 15th Street, NW, Washington, DC 20005
www.acec.org
(202) 347-7474

EPA Environmental Protection Agency
401 M Street, SW, Washington, DC 20460
www.epa.gov
(202) 260-2090

FM Factory Mutual System
1151 Boston-Providence Turnpike, P. O. Box 9102, Norwood, MA 02062-9102
www.factorymutual.com
(781) 762-4300

Federal Specifications
General Service Administration Specifications and Consumer Information
Distribution Center (WFSIS)
Washington Navy Yard Building 197, Washington, DC 20407
http://apps.fas.gsa.gov

© SEFA - 5th Edition Desk Reference - Version 3.0

IBC International Conference of Building Officials
5360 Workman Mill Road, Whittier, CA 90601-2298
www.icbo.org
(800) 423-6587

IEEE Institute of Electrical and Electronics Engineers
345 E. 47th Street, New York, NY 10017-2394
www.ieee.org
(800) 678-4333 - (212) 705-7900

ISA Instrumentation, Systems, and Automation Society
67 Alexander Drive, Research Triangle Park, NC 27709 www.isa.org
(919) 549-8411

ISO Int'l Organization for Standardization
Case Postal 56 - 1, ch. de la Voie-Creuse,
CH-121 1 Geneva 20, Switzerland
www.iso.org
+41 22 7490111

MCAA Mechanical Contractors Association of America
1385 Piccard Drive Rockville, MD 20850-4329
www.mcas.org
(301) 869-5800

MSS Manufacturers Standardization Society of the Valve and Fittings Industry
127 Park Street, NE, Vienna, VA 22180-4602
www.mss-hq.com
(703) 281-6613

NEBB National Environmental Balancing Bureau
8575 Grovemont Circle, Gaithersburg, MD 20877
www.nebb.org
301-977-3698

NEC National Electrical Code
One Batterymarch Park - P. O. Box 9101, Quincy, MA 02269-9101
www.nfpa.org

NEMA National Electrical Manufacturers Association
1300 N. 1 7th Street, Suite 1847, Roslyn, VA 22209
www.nema.org
(703) 841-3200

NFPA National Fire Protection Association
One Batterymarch Park, P. O. Box 9101 Quincy, MA 02269-9101
www.nfpa.org

NIH National Institute of Health
Bethesda, Maryland 20892
www.nih.gov

NSPE National Society of Professional Engineers
1420 King Street, Alexandria, VA 22314
(703) 684-2800

NSF NSF International
789 North Dixboro Road, Ann Arbor, MI 48105
www.nsf.org
(734) 769-8010

OSHA Occupational Safety and Health Administration
U.S. Department of Labor
200 Constitution Avenue, NW, Washington, DC 20201
www.osha.gov
(202) 219-8148

PDI Plumbing and Drainage Institute
45 Bristol Drive, Suite 101, South Easton, MA 02375
www.pdi-online.org
(800) 589-8956 - (508) 230-3516

SMACNA Sheet Metal & Air Conditioning Contractors' National Association
4201 Lafayette Center Drive, P. O. Box 221230, Chantilly, VA 20151-1209
www.smacna.org
(703) 803-2980

UL Underwriters Laboratories Inc.
333 Pfingsten Road, Northbrook, IL 60062
www.ul.com
(800) 704-4050 - (847) 272-8800

© SEFA - 5th Edition Desk Reference - Version 3.0

Scientific Equipment & Furniture Association
Recommended Practices

SEFA 2 - 2020
Installations

SEFA SPELLS SAFE

SEFA World Headquarters
65 Hilton Avenue
Garden City, NY 11530

Tel: 516-294-5424

Table Of Contents

Page

Committee Members 165

Foreword 166

1.0 Scope 167

2.0 Purpose 167

3.0 Glossary of Terms 167

4.0 Pre-installation Planning and Coordination 178

4.1 Site Access

4.2 Building Finish
- 4.2.1 Floors
- 4.2.2 Wall System
- 4.2.3 Ceiling System
- 4.2.4 Branch Electrical Circuits
- 4.2.5 Overhead Electrical Fixtures
- 4.2.6 Overhead Mechanical Lines
- 4.2.7 Service Lines
- 4.2.8 Environmental Conditions
- 4.2.9 Power Requirements
- 4.2.10 Project Site Verification
- 4.2.11 Sustainability

5.0 Receiving, Distribution, Storage and Security 180

5.1 Delivery Schedule and Project Site Conditions

5.2 Delivery

5.3 Delay of Delivery or Installation

5.4 Distribution/Storage of Equipment

5.5 Security

6.0 Installation Sequence Coortination with other Trades 181

Page

6.1 Scientific Equipment and Furniture Supplier (SEF Supplier)

6.2 Mechanical and Electrical Trades

6.3 Protection of Finished Surfaces

7.0 Installation Procedures 182

7.1 Installer Qualifications

7.2 Safety

7.3 Casework
- 7.3.1 Base Cabinets
- 7.3.2 Wall Cabinets and Wall Shelving
- 7.3.3 Tall Cabinets
- 7.3.4 Tables
- 7.3.5 Laboratory Benches
- 7.3.6 Mobile/Movable Cabinets
- 7.3.7 Service Utility Distribution Systems

7.4 Hazardous Storage Cabinets & Flammable/Solvent Storage Cabinets

7.5 Cabinet Venting
- 7.5.1 Venting Cabinets

7.6 Fume Hoods
- 7.6.1 Pre-planning for fume hood installation
- 7.6.2 Installation
- 7.6.3 MEP Connections and Air Balancing
- 7.6.4 Performance Testing

7.7 Work Surfaces (Counter Tops)
- 7.7.1 Mechanically Fastened Joints
- 7.7.2 Grounded Butt Joints
- 7.7.3 Field Welded Stainless Steel

7.8 Sink Bowls and Troughs

Page

7.9 Installation of Laboratory Service Fittings

7.10 Traps and Dilution/ Neutralization Tanks

7.11 Related Equipment

8.0 Project Completion and Close-out 186

8.1 Inspection Cycle

8.2 Inspection/Punch List

8.3 Final Acceptance

8.4 Warranties

© SEFA - 5th Edition Desk Reference - Version 3.0

SEFA 2—Installations Committee Members

Chair

Ron Johnson - H2I Group

Bedcolab

BICASA Srl

BSA Life Structures

BROEN-LAB

CiF Lab Solutions

DLR Group

Durcon Corporation

Flores Valles

Fundermax

Gleeson Construction, Inc.

HEMCO Corp.

Institutional Casework

J Talka Consulting LLC

Lab Crafters

Mott Manufacturing

Foreword

SEFA Profile

The Scientific Equipment and Furniture Association (SEFA) is an international trade association comprised of manufacturers of laboratory furniture, casework, fume hoods and members of the design and installation professions. The Association was founded to promote this rapidly expanding industry and improve the quality, safety and timely completion of laboratory facilities in accordance with customer requirements.

SEFA Recommended Practices

SEFA and its committees are active in the development of Recommended Practices having domestic and international applications. Recommended Practices are developed by the association taking into account the work of other standard-writing organizations. Liaison is also maintained with government agencies in the development of their specifications.

SEFA's Recommended Practices are developed in and for the public interest. These practices are designed to promote a better understanding between designers, architects, manufacturers, purchasers, and end-users and to assist the purchaser in selecting and specifying the proper product to meet the user's particular needs. SEFA's Recommended Practices are periodically updated. The Recommended Practices are numbered to include an annual suffix which reflects the year that they were updated. SEFA encourages architects to specify these Recommended Practices as follows: "SEFA 2-2020"

SEFA Glossary of Terms

SEFA has developed a Glossary of Terms which has been incorporated into this document, for the purpose of promoting a greater understanding between designers, architects, manufacturers, purchasers and end users. The terms defined by SEFA are frequently used in contracts and other documents, which attempt to define the products to be furnished or the work involved. The Association has approved this Glossary in an effort to provide uniformity among those who use these terms. Where a specific Recommended Practice contains definitions which differ from those in the Glossary of Terms, then the definitions in the specific Recommended Practice should be used.

SEFA encourages all interested parties to submit additional terms or to suggest any changes to those terms already defined by the Association. The definitions should be used to help resolve any disputes that may arise or to incorporate the applicable terms in any contract or related documents.

SEFA Disclaimer

SEFA uses its best effort to promulgate Recommended Practices for the benefit of the public in light of available information and accepted industry practices. SEFA does not guarantee, certify, or assure the safety or performance of any products, components, or systems tested, installed, or operated in accordance with SEFA Recommended Practices or that any tests conducted under its Recommended Practices will be non-hazardous or free from risk. SEFA encourages the use of third party independent testing where appropriate.

© SEFA - 5th Edition Desk Reference - Version 3.0

1.0 Scope

These Recommended Practices are intended to provide information about the installation practices recommended by manufacturers of scientific laboratory furniture and equipment. This information is for the use by architects, specifying engineers, contractors, and other purchasers, specifiers or end users of laboratory equipment.

2.0 Purpose

SEFA offers these Recommended Practices for use by federal agencies, architects, engineers, consultants, builders, specification writers, contractors and owners who specify and/or accept scientific laboratory furniture and equipment and its installation.

This information, if used as a guide for coordination and work sequencing, will afford the owner a quality installation of furniture consistent with economic utilization of resources employed.

These Recommended Practices are not intended to override local building codes and may conflict with certain "localized" construction practice.

3.0 Glossary of Terms

Abrasion Resistance: A measure of the resistance of the surface to wearing from articles slid across it. Can be determined by loss in weight or thickness caused by an abrasive agent moved across the surface following a fixed schedule

Acceptance Levels: The acceptance level for each performance criteria is based on the cumulative experience of actual field testing and laboratory results of SEFA members. Acceptance levels describe the expected outcome of each test procedure.

Access Opening: The part of the fume hood through which work is performed; sash or face opening.

Accessory: A component which can, at the discretion of the user be readily added, removed, or replaced and which when removed, will not prevent the fitting from fulfilling its primary function.

Acid Storage Cabinets: Cabinets in which Acids are stored to avoid having large quantities of hazardous material in the laboratory work area. This reduces the risk of personnel injury or damage to the work area of the laboratory.

Aerator: Any of a number of types of devices designed to deliver a mixture of air and water, at a specific G.P.M. rate. (May not be allowed in certain applications or jurisdictions.)

Air Foil: Curved or angular member(s) at the fume hood entrance. A horizontal member across the lower part of the fume hood sash opening. Shaped to provide a smooth air flow into the fume chamber across the work surface.

Air Gap: The unobstructed vertical distance through the free atmosphere between the lowest opening from any pipe or faucet supplying water to a tank, plumbing fixture or other device and the flood level rim of the receptacle.

Air Volume: Quantity of air normally expressed in cubic feet per minute (cfm)

Angel Panel Mount: A type of mounting unit at a 30 degree or 45 degree angle to the table top.

Angle Stops: See angel valve

Angle Valve: A 90 degree valve, its inlet and outlet ports at 90 degrees with the operating stem at 180 degrees to the inlet port.

ANSI/ASHRAE 110–2016: A fume hood performance test developed and promulgated by the American Society of Heating, Refrigerating, and Air Conditioning Engineers and The American National Standards Institute.

ANSI/BIFMA: ANSI is the American National Standards Institute. Approval of an American National Standard requires verification by ANSI that the requirements for due process, consensus, and other criteria for approval have been met by the standards developer. BIFMA is the Business and Institutional Furniture Manufacturer's Association, an association of manufacturers of desk products and the like.

Anti-Siphon Vacuum Breaker: A device or means to prevent back siphonage of water. (See Vacuum Breaker; check local codes for use and applications for vacuum breaker types).

Apparatus: A machine or group of machines and accessories.

Approved: Acceptable to the authority having jurisdiction.

Arithmetic Mean: A number obtained by dividing the sum of a set of quantities by the number of quantities in a set; average.

Aspirator: A device supplied with fluid under positive pressure which passes through an integral orifice or "construction" causing a partial vacuum. (Check local codes for use and applications for vacuum breaker types.)

ASTM: American Society for Testing and Materials.

Authority Having Jurisdiction: An organization, office or individual responsible for enforcing the requirements of a code or standard, or for approving equipment, materials, and installation, or a procedure.

Auxiliary Air: Supply or supplemental air delivered to a laboratory fume hood to reduce room air consumption.

Baffle: Panel located across the rear wall of the fume hood chamber interior and directs the air flow through the fume chamber.

Ball Type Valve: Valve used for the purpose of controlling gases or water. The seal is achieved by the use of a spherical "ball" which is positioned between two (2) gasket type devices which are within body housing and prevent bypass of fluids or vapors.

Base Cabinets: A base cabinet is a storage device consisting of two ends, a back, and a face. The face may be open, to access the storage area, or may be outfitted with one or more drawers and/or door(s). The base cabinet may or may not include a top. A base cabinet is always mounted on the floor and normally supports a surface. The top surface is normally no more than 42" (1,066.8mm) off the floor surface.

Blower: Air moving device, sometimes called a fan, consisting of a motor, impeller and housing.

Broom Clean: A condition in an interior area in which surface debris has been removed by dry methods.

BS 7258: A fume hood containment test developed by the British Standard Association, used in most commonwealth countries.

Built-In Fitting: A fitting, the body of which is concealed behind the finished wall.

Bypass: Compensating opening in a fume hood that functions to maintain face velocity as the sash is raised or lowered.

Cabinet Depth (Deep): Given a front, bottom, two sides, and a top, the cabinet depth is a measure of the side of the cabinet, in its normal upright position, from the back to the front.

Cabinet Height: Given a front, bottom, two sides, and a top, the cabinet height of the side of the cabinet in its normal upright position, from the bottom to the top, excluding any additional surface.

Cabinet Width: Given a front, bottom, two sides, and a top, the cabinet width is a measure of the front of the cabinet in its normal upright position from one side to the other.

California Type Hood: A rectangular enclosure used to house distillation apparatus that can provide visibility from all sides with horizontal sliding access doors along the length of the assembly.

Canopy Hood: Ventilating enclosure suspended above work area to exhaust heat, vapor or odors. This device is not a laboratory fume hood, rather is defined as a laboratory exhaust device.

Capture Velocity: Speed of air flowing past the face opening through a fume chamber / laboratory exhaust device at a speed necessary to capture generated fume vapors and/ or

© SEFA - 5th Edition Desk Reference - Version 3.0

particulates and directed to the exhaust outlet. Measured in feet per minute (fpm) or meter per second (mps).

Casework: Base and wall cabinets, display fixtures, and storage shelves. The generic term for both "boxes" and special desks, reception counters, nurses stations and the like. Generally includes the tops and work surfaces.

Celcon®: An acetyl copolymer used for distilled water. Celcon® is a high strength, crystalline, thermoplastic resin that contains properties to resist chemicals most commonly used in laboratories, and producing low leachate levels.

Centerset Fitting: An exposed combination supply fitting for assembly through the top or deck of a fixture.

Chase (Plumbing Area): Space located behind the back of the base cabinet or in a vertical enclosure used to house plumbing or electric lines.

Char Resistance: The ability of a top to withstand surface deterioration due to elevated temperatures.

Check Valve: A valve that permits flow in one direction, but that closes automatically to retard or obstruct the flow of fluid in a reverse direction.

Cold Rolled Steel: Sometimes referred to as Cold Drawn. Cold Drawn is the process of cold forming steel parts wherein plastic flow occurs over a curved axis.

Cold Water: For test purposes, water at a temperature of 40 degrees F. to 70 degrees F. (5 degrees C. to 21 degrees C.)

Composition Core: A core material using particleboard.

Combination Faucet: A supply fitting with more than one supply inlet delivering a mixture of hot and cold water through a single spout.

Combination Hood: A fume hood assembly containing a bench hood section and a walk-in section.

Combination Sash: A fume hood sash with a framed member that moves, vertically housing two or more horizontal sliding transparent viewing panels.

Combination Unit: A base unit of the type that has both doors(s) and drawer(s)

Combination Fitting or Faucet: A supply fitting with more than one supply inlet delivering a mixture of hot and cold water through a single spout. May also be referred to as a "mixing faucet."

Concealed Fittings: A fitting with body mounted beneath or behind the fixture or table top.

Corrosion Resistant Finishes: Corrosion resistant finishes are organic coated finishes applied to all exposed surfaces of laboratory products such as service fitting, either colored or clear. The finish can be epoxy, epoxy/polyester hybrid, or polyester.

Counter Mounted Cabinet: A counter mounted cabinet is a wall cabinet [usually with a height of approximately 48" (1,219.2mm)] and is typically mounted on the work surface or shelf, as in a reagent shelf)

Countertop: Work surface resting on a base cabinet normally 36" (91.4cm) high for standing, 34" (86.4cm) for ADA or 30" (76.2cm) for seated height.

Critical Level: The level at which polluted water, entering through an outlet from the supply fitting, will flow back to the supply lines by gravity and/or any negative pressure in the supply line when the water control valve is wide or fully open.

Cross Drafts: Air draft that flows parallel to or across the face opening of the fume hood.

Cupboard (Door Unit): The portion of the cabinet with no drawer(s) and may be enclosed by door(s).

Customer: Can be any one or combination of these listed: Architect, Buyers, Contractors, Engineers, End Users, Specifying Engineers, Purchasers, Construction Mangers or Owners.

Damper: Device installed in a duct to control air flow volume.

Delivered and Installed: The Laboratory Furniture and Equipment Contractor shall be responsible for coordinating the shipment and shall file freight damage claims as necessary. Materials may be shipped FOB origin factory or FOB destination, please refer to proposal or contract for details.

Demonstration Hood: A vented enclosure used for student demonstrations that has visibility on at least two sides, used primarily in schools. This device is not a laboratory fume hood, but is considered to be a laboratory exhaust device.

Density: The weight of one cubic inch of finished material (or gr per cc).

Dilution Tank: Tank basins in which highly concentrated wastes are mixed with wastes from other laboratory areas to produce diluted solutions.

Distillation Hoods: A laboratory fume hood that provides a work surface approximately 18 inches (45.7 cm) (0.457 m) above the room floor, to accommodate tall apparatus.

Double Ledge Faucet: Single shank water faucet which supplies hot and cold water to a sink or other location where required.

Double Panel Flange: Similar to single panel flange but with two outlets.

Drain Line: The pipe or tubing used to connect the sink tail piece or trap to the building / plumbing waste line.

Drawer: A sliding storage box or receptacle opened by pulling out and closed by pushing in.

Dual Entry Hood: A bench type fume hood that has two sash openings, usually on opposite sides.

Duct: Round, square, oval or rectangular tube used to enclose moving air.

Duct Velocity: Speed of air moving in a duct, usually expressed in feet per minute (fpm) or meters per seconds (mps)

Elbow: A fitting that forms an angular bend.

Electrical Service Fixture: Outlet or other electrical device directly attached to the laboratory furniture and equipment.

Emergency Spray Unit: A flexible hose type device used for flushing the face or clothing of person who accidentally comes into contact with acid or similar dangerous substances.

Exhaust Collar: Connection point between duct and fume hood through which all exhaust air passes.

Exposed Fitting: A fitting where the body is mounted on or above the finished surface.

Face: Front access or sash opening of laboratory fume hood. Face opening measured in width and height. See sash or access opening.

Face Velocity: Average speed of air flowing perpendicular to the face opening and into the fume chamber of the fume hood and expressed in feet per minute (fpm), measured at the plane of the face or sash opening.

Fan: Air moving device, usually called a blower, consisting of a motor, impeller and housing.

Faucet: A valve device designed to control and/ or guide the flow of water.

Filler Panel: A panel used to close an open area between a unit and a wall or between two units.

Filter: Device to remove particles from air.

Fitting: See Service Fitting

Fixture: A sink or receptacle that receives water or water-borne waste and discharges into a drainage system. Note: The term fixture has long been used in the laboratory field to describe a service fitting. (See: Service Fitting.)

Flame Resistance: The ability of the material to withstand flame spread.

Flammable/Solvent storage cabinets: Cabinets in which heat ignitable materials are stored to resist exposure to ignition sources and restrict access to unauthorized personnel if lockable.

Flange-Faucet: A faucet flared out as in a flange shape so as to cover over edges of mounting holes or to provide a support.

Flood Level Rim: The flood level rim is the top edge of a receptacle over which water would overflow.

Foot Valve: A water control device operated by one's foot. (Also see: Pedal Valve.)

Free on Board Destination: F.O.B. destination, freight prepaid. The laboratory Furniture and Equipment Contractor shall pay freight costs. Customer accepts title and equipment at F.O.B point of the job site and laboratory supplier is responsible for filing and collecting freight claims.

Free on Board Origin: F.O.B. origin, freight prepaid and added to invoice. The laboratory Furniture and Equipment Contractor shall prepay freight cost and include it as a separate invoice item. Customer accepts title and equipment at F.O.B point loaded onboard transportation vehicle. Customer is responsible for filing and collecting freight claims.

Free Standing: Requiring no support or fastening to other structures.

Front Load Valve: Valves usually installed in the walls of fume hoods for controlling gases or water, with the handle and cartridge having access from the face of the hood, without the need to remove the entire valve from the hood.

Fuel Gas: A gas used to supply heat.

Fume Chamber: The interior of the fume hood measured in width, depth, and height constructed of material suitable for intended use.

Fume Removal System: A fume hood exhaust engineered device to effectively move air and fumes consistently through laboratory exhaust device, duct and exhaust blower.

Note: Room air, make-up air, auxiliary air (if used) and pollution-abating devices (if used) are integral parts of a properly functioning system and should be considered when designing a fume removal system.

Furnish: Supply to contractors; not installed by Laboratory Furniture Equipment Manufacturer or local representative.

Gas Cock: A ground key or ball type shutoff valve used to control the flow of gas services, low pressure air or vacuum.

Glove Box: Total enclosure used to confine and contain hazardous materials with operator access by means of gloved portals or other limited openings; this device is not a laboratory lab exhaust device or fume hood.

Gooseneck: A piece of pipe or tubing the shape of which conforms to the letter "U", is part of a faucet or fixture, and whose function is to direct the flow of water and other laboratory services to a certain point. It may be of the rigid or swivel type.

Grounds/Blocking : Reinforcement within walls to provide adequate anchorage for wall-hung or secured equipment. Specific material to be determined by the structural designer.

Ha Test: This is an abrasion resistance test in which an abrasive wheel with uniform predetermined weight is applied against the surface for a predetermined time to establish the depth of penetration.

Hand Tools: Tools, such as a screwdriver, key wrench, flat-jawed wrench, strap wrench and pliers, which are normally carried by tradesmen for installation and maintenance.

Hardness: A measure of resistance of the surface and body of the material to denting or scratching, determined by the diameter (or depth) of a spherical (or other) point pressed against the surface with known load or the width of a groove produced by a tool of known contour.

Hardware: Manufactured articles used in producing and installing cabinets. Such articles

include items such as screws, pulls, hinges, and drawer slides.

Hazardous Storage Cabinets: General term for cabinets that control and restrict access to chemicals that might be harmful or dangerous to students or other personnel not qualified to have access. These chemicals may include but are not limited to Corrosives, Acids, Bases and other chemicals found in the Laboratory

Heat Resistance: The temperature that a top can withstand heat without deteriorating.

High Density Shielding: A barrier made of lead.

High Pressure Laminate: Laminated thermosetting decorative sheets for lamination to a selected core for panel, shelf and top constructions.

Hose Cock: A ground key, needle type or ball type shutoff valve used to control the flow of air, vacuum or gas services.

Imbalance: Condition in which ratio of quantities of supply air is greater or lesser than the exhaust air.

Impact Resistance: A measure of toughness that is determined by the energy absorbed in causing a fracture under an impact blow.

Index Button: An indicator of the services being supplied by the fitting to which it is attached. Normally color coded.

Integral Vacuum Breakers: A vacuum breaker which is formed as a unit with the faucet gooseneck. (Check application for local codes.)

Job Site: Physical location or building site where laboratory furniture is to be installed.

Joinery: The junction of two pieces of material intended to be permanently connected.

Knee Space Panel: A panel used to close the area under an apron, to enclose the plumbing space, or to shield the knee space area.

L**aboratory Furniture:** Furniture designed, manufactured and tested for installation and used in a laboratory.

Laboratory Furniture and Equipment: The casework, fume hoods, work surfaces, sinks, fixtures, shelves, and associated hardware as detailed.

Laboratory work area – The main area of the laboratory used during experiments, testing or teaching.

Laminate: A product made by bonding together two or more layers (laminations) of material or materials.

Laminar Flow Cabinets: Name applied to clean bench or biological enclosures. This device is not a laboratory exhaust device.

Latch: A piece of hardware designed to hold a door or drawer closed.

Leveling Screws (Levelers): Threaded components designed to allow adjustment of the cabinet vertically as needed for leveling.

Liner: Interior lining used for side, back and top enclosure panels, exhaust plenum and baffle system of a laboratory fume hood or chemical resistant cabinet.

Make-Up Air: Air needed to replace the air taken from the room by laboratory fume hood(s) and other air exhausting devices.

Manifold: A fitting or pipe with many outlets or connections relatively close together.

Manometer: Device used to measure air pressure differential, usually calibrated in inches of water.

May: When used indicates an alternate requirement or option.

Medium Density Fiberwood (MDF): Wood particles reduced to fibers in a moderate pressure steam vessel combined with a resin and bonded together under heat and pressure.

© SEFA - 5th Edition Desk Reference - Version 3.0

Mixing Valve: A valve or faucet designed to mix liquids by means of automatic or manual regulation.

Monel: An alloy of approximately 67% nickel, 28% copper and 5% other elements that is made by direct reduction from ore in which the constituent metals occur in these proportions.

Needle Hose Cock: A control device in which the opening, consisting of a small hole, is opened or closed by a needle or cone that is thrust into or is withdrawn from the hole. Normally used for fine control and/or high pressure gases.

Negative Air Pressure: Air pressure lower than ambient.

Neutralization Tank: Tanks that can be charged with marble or limestone chips with a high, (90%+), calcium carbonate content. As wastes are discharged into the unit, chips will react with the acid to form less corrosive materials.

Nipple: A short piece of threaded pipe.

Nominal Dimensions: Not all cabinet manufactures produce product to the identical dimensions. All dimensions given in this document are accurate to within five percent, which is considered nominal.

Nozzle: The outlet from a faucet or hose so designed so that the issuing stream of water is thrown in a shape or size different from the diameter of the pipe.

Panel Flange: A type of mounting unit used where the back panel is constructed at a 90 degree angle to the table top.

Particleboard: A generic term for a panel manufactured from lignocellulosic material– commonly wood– essentially in the form of particles (as distinct from fibers) These materials are bonded together with synthetic resin or other suitable binder, under heat and pressure, by a process wherein the inter-particle bonds are created wholly by added binder.

Particulate Matter: Small, light-weight particles that will be airborne in low velocity air [approximately 50 fpm (.25 m/s)].

Pedal Valve: A device used to operate valves by means of the foot, may be either single or double, floor, ledge or wall mounted.

Pedestal: See Turret.

Permanent Damage: Destruction to material or joinery that would require repair in order to return to its original state.

Permanent Deformation: Deflection that has exceeded the limits of the product, thus changing the original shape of the product.

Permanent Deterioration: Erosion or corrosion of material such that the components will never return to the original shape of the material or product.

Permanent Failure: See "permanent damage"

Pipe Support: A rack of framework located in the service chase way used to support the service lines.

Pitot Tube: Device used to measure air pressure differential, usually calibrated in inches of water.

Plenum Chamber: Chamber used to equalize air flow.

Polyethylene: A plastic polymer of ethylene used chiefly for containers, fittings, sinks and interior fume hood liner.

Polypropylene: Material is a polyolefin which is generally high in chemical resistance. Material should conform to ASTM D-2146. This material is commonly used for acid waste piping as well as for deionized water.

Polyvinyl Chloride (PVC): A water insoluble, thermoplastic resin derived by the polymerization of vinyl chloride used chiefly for containers, fittings and piping.

Polyvinylidene Fluoride (PVDF): Material is a strong and abrasion resistant fluoropolymer. It is chemically resistant to most acids, bases and organic solvents, and is the preferred material for

piping and faucets for ultra-pure water. Pure PVDF is an opaque white resin that is resistant to UV radiation, and is superior for non-contaminating applications.

Positive Air Pressure: Air pressure higher than ambient.

Potable Water: Water which is satisfactory for drinking, culinary and domestic purpose, and meets the requirements of the Health Authority having jurisdiction.

Pressure Gauge: Instrument for measuring the pressure of fluids, gases or air.

Pressure Regulator: Any device by means of which pressure may be regulated.

Primary Outlet: The outlet from the fitting on the discharge side of the valve.

Proper Authorities: The party(ies) designated by contract to approve additions, changes, or deletions to contracts, plans or specifications.

Pulls: Articles used to grasp the door or drawer (see also hardware).

Quick Connect: A device used in place of the serrated tip where quick connect and disconnect requirements are needed for water, air and non-corrosive gases.

Rack Resistance: The ability of a desk product to resist stresses that tend to make the product distort and the drawers become misaligned.

Rail: A bar extending from one side of a cabinet to the other.

Reagent: A substance used because of its chemical or biological activity.

Reagent Rack: A shelf, or shelves, provided at the back of wall assembly, or down the middle of center tables, island or peninsulas to provide storage for reagent bottles, with provision made for the support of mechanical or electrical service lines and service fittings as needed.

Reasonably: When used indicates using fair, and sensible methods within accepted industry standards and guidelines.

Related Equipment - Items not generally manufactured by the Scientific Equipment and Furniture Supplier, (SEF supplier), but furnished and/or installed as part of the SEF supplier's contract. These may consist of but are not limited to: instrumentation, environmental rooms, refrigeration systems, laboratory apparatus, etc.

Remote Control Valves: Valves usually installed in the service chase area of fume hoods with the control handles normally on the face of the hood which regulates and controls the flow of the services to the outlets in the interior of the fume hood.

Removable Back: A panel located on the inside back of the base cabinet which is removable in order to gain access to the service chase area.

Renewable Seat: A seat in a valve which can be removed and replaced with a tool.

Replaceable Interior Unit: A cartridge type assembly containing all the working parts of a valve.

Room Air: That portion of the exhaust air taken from the room.

Rough-Ins: The location for the point of connection for plumbing, electrical, or mechanical services within the casework service tunnel/ chase shall be located within fifteen feet (15') or as stated by local codes, whichever is less, of the final fixture location.

Rough-In Point: Individual or common supply of mechanical, electrical and heating, ventilating and air conditioning through wall, floor or ceiling, located within the equipment chase.

RTV Silicone Sealant: Silicone is an organic silicon compound highly resistant to heat, water, etc. Sealant hardens when exposed to air. RTV means, "room temperature vulcanizing" and will harden or cure without a heat gun or other heat source. Will form a permanent elastic watertight

and weatherproof bond to many surfaces, such as glass, ceramic, metals, painted surfaces and plastics.

Sash: Moveable panel at the access opening of a laboratory fume hood.

Scientific Equipment and Furniture Supplier (SEF Supplier): Manufacturer, dealer, distributor or agents who provide laboratory furniture, equipment and fume hoods.

Shall: Where used, indicates a mandatory requirement.

Should: Where used indicates recommendation.

Sink Outlet: A flanged fitting that is recessed and sealed into the sink bottom to provide means of connecting sink to drainage system.

Scribe: A strip of matching material that is fitted to the wall on one edge and fastened to the casework on the other to make a tight enclosure to the structure next to it when casework abuts the walls, column, etc.

Scrubber, Fume: A device used to remove contaminants from fume hood exhaust.

Seat Disc: A disc or washer which when compressed against the seat makes a water tight joint.

Seat Faucet: The surface around or within the orifice in the faucet through which water or other liquid flows and against which the closing member, such as stem washer, is pressed or seated to terminate the flow.

Secondary Outlet: Any outlet from the fitting other than primary outlet, on the discharge side of the valve through which water may be discharged.

Self-Closing Faucet: A faucet which closes automatically when the faucet handle is released.

Serrated Tip (Nozzle): An outlet straight or angled, of graduated serrations which will accommodate laboratory hoses used in experimentation.

Service: The supplying of utilities or commodities such as water, air, gas, vacuum, and steam as required in hospital or laboratory functions.

Service Fittings and Fixtures: Service fittings include oxygen, gas, air, vacuum, and steam cocks, turrets, hot, cold and distilled water faucets, remote controlled valves, filter pumps, vacuum breakers, eye washers, shower heads, steam cones and steam baths, sinks, cup sinks, traps and plaster traps. Service fixtures include electrical convenience outlet boxes, electrical pedestals, "C" type conduits, single or duplex A.C. or D.C. receptacles, switches, variable voltage units and fluorescent tubes.

Service Fixture: Item of laboratory plumbing mounted on or fastened to laboratory fume hood.

Service Line: Pipe or tubing used to convey the service, gas or liquid, from the building service line to the service fitting on the laboratory furniture or equipment.

Service Strip: A rack or framework used to support the service line.

Service Tunnel or Service Chase: Area in back of or between the backs of base cabinets, under the working surface or within vertical voids provided to allow room for several lines.

Service Turret: An enclosure tht projects above the table top to provide room for the service line to be brought up throught the table top or be connected to the service fitings that are mounted on the outside of the enclosure.

Service Umbilical: A fully enclosed chase containing service lines extending from the ceiling area above the laboratory bench into the service tunnel of the same laboratory bench.

Shall: Where used indicates a mandatory feature.

Significant Surface: A finished exposed surface which if marred would spoil the appearnce of the fitting.

Single Control Mixing Valve: A fitting with a single control which shall serve to turn water on

and off and to regulate volume and temperate flow.

Sink Outlet: A flanged fitting that is recessed and sealed into the sink bottom to provide means of connecting sink to drainage system.

Slot Velocity: Speed of air moving through slotted openings in lab exhaust devices such as fume hood baffle openings.
different products.

Smoke Candle: Smoke producing device used to allow visual observation of air flow.

Spot Collector: A small, localized ventilation hood usually connected by a flexible duct to an exhaust fan. This device is not a laboratory fume hood and should be considered a lab exhaust device.

Stainless Steel: Iron based alloys containing more chromium than the 12% necessary to produce passivity (less reactive), but less than 30%.

Static Pressure: Air pressure in laboratory fume hood or duct, usually expressed in inches of water.

Static Pressure Loss: Measurement of resistance created when air moves through a duct or exhaust device usually expressed in inches of water.

Stops: Valves used for the purpose of controlling the flow of water and which are part of the distributive plumbing system except as otherwise determined.

Straight Stops: See Straight Valves.

Straight Valves: Straightway valves used for laboratory services such as gas, air, water and steam which have their inlet and outlet port at a position 180 degrees from each other.

Strength: Known variously as "modulus of rupture" or "flexural strength:" and is an ultimate or breaking strength. Generally measured by supporting a strip of material across two supports and applying a load between these supports. By computation the strength values can be used to determine the load-carrying ability of the product and may be used to compare strengths of different products.

Submersion: Immersed in water.

Superstructure: The portion of a laboratory fume hood that is supported by the work surface.

Supplemental Air: Supply or auxiliary air delivered to a laboratory fume hood to reduce room air consumption. (Refer to local codes for proper application.)

Supply Nipple & Lock Nut: The threaded connecting units used for deck or panel mounting of laboratory fittings.

Supply Stops: For the purpose of controlling the flow of water and which are a part of the distributive plumbing system immediately adjacent to, or a part of, and preceding a fitting.

Tables: An article of furniture having a flat, horizontal surface supported by one or more support members (legs), and a frame (apron).

Table Top Hood: A small, spot ventilation hood for mounting on table tops. Used primarily in educational laboratories. This device is not a laboratory fume hood but could be considered an exhaust device.

Tall Cabinet (Full Height Unit): A tall cabinet is a storage device that consists of two ends, a back and a face. The face may be open to access the storage area or may be outfitted with one or more drawers and/or door(s). A tall cabinet is always mounted on the floor and is typically 84" (2,133.6mm) high.

Tail Piece: The connecting fitting used to connect the sink outlet to trap or drain line. Tail piece may be an integral part of the sink outlet or a separate piece.

Tank Nipple: See Supply Nipple.

Thermal Anemometer: A device for measuring fume hood velocity utilizing the principle of thermal cooling of a heated element as the detection element.

© SEFA - 5th Edition Desk Reference - Version 3.0

Thermal Shock: The ability of material to withstand sudden changes in temperature without cracking or spalling.

Threshold Limit Valve-Time Weighted Average (TLV-TWA): The time-weighted average concentration for a normal 8-hour workday or 40-hour week, to which nearly all workers may be repeatedly exposed, day after day, without adverse effect.

Titanium Tetrachloride: Chemical that generates white fumes used in testing laboratory fume hoods.

Torsion: The state of being twisted.

Total Pressure: Algebraic sum of velocity pressure and static pressure.

Toxic Resistance: The ability of a top to withstand emission of a toxic substance, if any, during chemical process.

Transport Velocity: Minimum speed of air required to support and carry particles in an air stream.

Turret: Type of mounting which allows the use of (1)-(2)-(3)-(4) hose cocks, needle hose cocks or straight stops, where installation of same are required either on the table top, back, or panel.

Uniformly Distributed: The application of forces such that weight is evenly applied to the subject surface even as the surface deflects.

Unobstructed Entry: A cabinet is deemed to be unobstructed if access to the entire storage area is completely without obstacle.

Upright Position: A cabinet oriented in its intended position.

Vacuum Breaker: A device to prevent the creation of a vacuum by admitting air at atmospheric pressure, used to prevent back siphonage.

Valve: A device by which the flow may be started, stopped, or regulated by a moveable part which opens or obstructs the passage.

Valve Seat: The port or ports against or into which a disc or tapered stem is compressed or inserted to stop flow of fluid or gas.

Velocity Pressure: Pressure caused by moving air in a laboratory fume hood or duct, usually expressed in inches of water.

Vent: Ducting or piping system designed to remove or change the air in an enclosed space like storage cabinets.

Walk-In Hood: A floor-mounted, full-height fume hood, designed to accommodate tall apparatus and permit roll-in of instruments and equipment.

Wall Cabinet: A wall cabinet is a storage device consisting of two ends, a back, a top, bottom, and a face. The face may be open to access the storage areas or may be outfitted with one or more door(s). The wall cabinet usually does not include a drawer. A wall cabinet is always mounted on a vertical surface such as a wall, a divider, panel or some other vertical structure. A wall cabinet is usually less than 48" (1,219.2mm) high.

Water: The liquid that descends from the clouds as rain; forms streams, lakes and seas; issues from the ground in springs, and is a major constituent of all living matter, and when pure, consists of an oxide of hydrogen H_2O, in the proportion of two atoms of hydrogen to one atom of oxygen. It is an odorless, tasteless, very slightly compressible liquid which appears bluish in thick layers. Freezes at 0 degrees C. and boils at 100 degrees C., and has a maximum density of 4 degrees C. and a high specific heat, contains very small equal concentrations of hydrogen ions, reacts neutrally and constitutes a poor conductor of electricity, a good ionizing agent.

Water Absorption: The percentage gain in weight of material immersed in water for a specified time. When the specific gravity of the product is known, water absorption can be used to determine the total void space. The absorption is neither a measure of the rate nor amount of chemical attack.

Water Outlet: A water outlet, as used in

connection with the water distributing system, is the discharge opening for the water.

Weather Cap: Device used at the top of an exhaust stack to prevent rain from entering the stack end.

Work Space (Fume Hood): The part of the fume hood interior where apparatus is set up and fumes are generated. It is normally confined to a space extending from six inches (15.2 cm) (152mm) behind the plane of the sash(es) to the face of the baffle, and extending from the work surface to a place parallel with the top edge of the access opening.

Work Surface: The surface that a laboratory fume hood is located on and supported by a base cabinet. In the fume chamber the surface is recessed to contain spills.

Wrist Action Handle: A means of controlling a valve with the wrist or forearm.

Wye Fitting: Similar to double panel flange, but outlets are at 90 degrees or less.

4.0 Pre-installation Planning and Coordination

Delivery and installation schedule coordination

Upon contract award, it is the responsibility of the general contractor or owner to provide the laboratory casework supplier/installer with a detailed project schedule. It is also the responsibility of the GC or owner to make and communicate regular updates to the project schedule. If a detailed project schedule is not provided by the GC or owner the casework supplier/installer's schedule will dictate the sequence, delivery schedule and installation of work.

4.1 Site Access

The customer shall provide the SEF supplier and installer with a site logistics plan. The logistics plan shall identify the requirements and limitations for products being delivered to the site and moved through the building to its final location. Examples of topics covered in the logistics plan include the availability of a loading dock at the project site, limitations of truck size, elevator or lift size restrictions, and door or turn radius restrictions within the building, maximum crate or package size, etc.

4.2 Building Finish

Upon delivery of equipment to the job site, it shall be possible for complete distribution and commencement of the physical installation in the rooms where the equipment is designated to be installed. In order to ensure an orderly installation and to avoid damage to finished products, the following degree of building finish shall be completed prior to installation of furniture and equipment:

4.2.1 Floors

Floors within the area of casework installation are to be broom clean and free of obstruction. It is the responsibility of the general contractor or owner, to provide adequate pathways and work areas that allow for distribution of the laboratory casework in an efficient manner, to facilitate a quality installation. It is recommended that laboratory furniture and equipment is installed on finished flooring. The levelness and flatness of the floor is a critical factor in the fit and finish of the laboratory base cabinets and countertops. Prior to the start of the installation, the customer should verify the F-numbers for the floor flatness meet the project requirements but are no less than an FF 25 as defined by the American Concrete Institute ACI 117. The laboratory floor shall be level to within 1/8" in 10 feet in any direction. Any required corrections to the floor condition shall be by others and not the responsibility of SEF supplier.

4.2.2 Wall Systems –

It is the responsibility of the general contractor to provide and install proper wall blocking in the proper locations to support the laboratory casework system. Prior to the start of the installation of laboratory furniture and equipment, it is recommended that wall systems shall be completely installed and be plumb for installation of lab furniture and equipment. Wall system finish

© SEFA - 5th Edition Desk Reference - Version 3.0

shall be complete, but shall include, at a minimum, a prime coat of paint, appropriate with respect to the specifications. Sheetrock walls, modular steel wall systems or other hollow walls shall include horizontal bracing (in-wall blocking) supplied and installed by others for support of wall cases, and equipment shelving as shown in submitted drawings or required by local code.

4.2.3 Ceiling System

Prior to the start of the installation of laboratory furniture and equipment, it is recommended that the ceiling system shall be in a finished condition. For suspended ceiling systems, at a minimum it is recommended that the support ceiling grid is installed prior to the start of the installation of laboratory furniture and equipment. It is also recommended that air conditioning grilles, call systems and permanent sprinkler heads shall be installed.

4.2.4 Branch Electrical Circuits

Prior to the start of the installation of laboratory furniture and equipment, it is recommended that branch electrical circuits, including grounding conductors, shall be in place.

4.2.5 Overhead Electrical Fixtures

Prior to the start of the installation of laboratory furniture and equipment, it is recommended that overhead electrical fixtures shall be installed and connected. The customer shall be responsible for ensuring that adequate lighting is provided for areas where the installation of laboratory furniture and equipment shall take place.

4.2.6 Overhead Mechanical Lines

Prior to the start of the installation of laboratory furniture and equipment, it is recommended that overhead mechanical lines shall be tested for leaks before finished furniture is installed in any area. Where mechanical, electrical and H.V.A.C. service lines will be behind, above or under furniture installed in designated locations, service access or stubs shall be installed and tested at the appropriate rough-in point.

4.2.7 Service Lines

Service lines for water, steam, gas and special gases shall be flushed clean of contaminates, capped and tested for leaks prior to the connection of service fittings. It is recommended that water be available in or near the rooms where counter tops are designated to be installed.

4.2.8 Environmental Conditions

Prior to the start of the installation of laboratory furniture and equipment, it is recommended that the building shall be secure and watertight. Exterior glazing and doors shall be installed providing protection from the elements and security for finished equipment and furniture. General conditions indicating readiness for delivery and installation include: Overhead ceiling work, ductwork, lighting, insulation, etc. are complete, air handling and control systems are functioning and relatively constant temperature and humidity conditions are being maintained through owner acceptance. Temperature and humidity ranges of 65-80° F (18-27° C) and 30-50% r.h. are recommended.

4.2.9 Power Requirements

The general contractor and/or owner shall provide, at no charge to the SEF supplier; necessary electrical service and lighting for normal installation procedures. It is recommended that electrical power be available in the rooms where equipment is designated to be installed. If temporary service must be used, service extensions shall not exceed 100 feet (30 meters) in length. Power service shall conform to OSHA requirements.

4.2.10 Project Site Verification

The SEF supplier shall inspect the project site during the course of the project. The SEF supplier shall take any field measurements required to ensure the proper placement and fit of finished product at the project site. If final field dimensions are not available due to lack of final framing, the general contractor shall agree to "hold to" dimensions to allow for timely final ordering

of laboratory furniture, equipment and related material. If any field conditions or measurements vary more than 3" from the construction documents or SEF shop drawings, or any other conditions are discovered that would lead to a significant change in the finished product, the SEF supplier shall notify the customer and work together to determine the appropriate resolution. At the conclusion of the project, the SEF supplier shall provide "as-built" drawings reflecting all changes made to the products to accommodate field conditions.

4.2.11 Sustainability

SEFA is committed to sustainability; to that end it is recommended that minimization of waste to reduce disposal problems be a priority. Some ways of doing this is by minimizing packaging, blanket wrapping of product is one method as is utilization of returnable skids and pallets. Use of recyclable products will also reduce on items going to local landfills.

5.0 Receiving, Distribution, Storage and Security

5.1 Delivery Schedule and Project Site Conditions

At the start of the project, the SEF supplier shall work with the customer to develop a delivery schedule and logistics plan. The delivery schedule shall be updated as needed during the course of the project to reflect changes due to approval of shop drawings, unforeseen site conditions, or any other condition that would negatively impact timely delivery.

5.2 Delivery

All deliveries shall be scheduled and confirmed by the SEF supplier 24 hours prior to shipment. The receiving party, whether it is the SEF Supplier, his representative or the customer, shall inspect the products upon their arrival. Any damaged product or damaged containers/packaging that may contain concealed damaged products shall be noted on the bill of lading and the SEF supplier shall be informed within 48 hours, preferably with photographic documentation, showing that the damage occurred during transit and not at the project site.

5.3 Delay of Delivery or Installation

The customer and the SEF supplier shall endeavor to coordinate the delivery schedule to the mutual benefit of both parties. Either party shall provide as much advance notice to the other in the event conditions dictate changes to the delivery schedule. If the project site is not ready to accept the products as scheduled, or if the delivery or installation of the products cannot commence in a timely manner due to conditions beyond the SEF supplier's control, casework and equipment shall be placed in an appropriate storage location. Additionally, unless otherwise agreed to, the costs for extra handling, additional shipping and unforeseen storage shall be borne by the customer. Unless otherwise agreed to, the SEF supplier shall bill the customer for the value of the completed products once they have entered the storage location. If the SEF supplier cannot deliver products to the site in accordance with the delivery schedule, the SEF supplier shall work with the customer to develop a recovery plan to bring the project back on or close to the previously agreed upon delivery schedule. If there is additional installation expense due to a compressed or accelerated schedule the additional expense shall be paid to the SEF supplier / installer by the owner or general contractor.

5.4 Distribution/Storage of Equipment

The general contractor or owner shall plan for and allow for the safe and effective distribution of the laboratory equipment. This includes consideration of proper vertical transportation above and below the unload level. Any modification to the building to allow for oversized materials shall be the responsibility of the general contractor or owner.

Distribution of the equipment within the project site, same building & same floor and in the vicinity of the products' final installation location shall be possible at the time of delivery, in accordance with the delivery schedule. If, upon mutual agreement, earlier shipment is made and the casework is

© SEFA - 5th Edition Desk Reference - Version 3.0

placed in temporary storage, it is to be secure from the elements, secure against damage by other trades and secure against loss. Additional cost associated with storage, multiple handling necessitated by jobsite conditions shall be borne by the customer. For products that are furnished by the SEF supplier which are to be turned over to others at the project site, the SEF supplier and the customer shall coordinate the availability of the receiving party to take receipt and ownership of products immediately upon their arrival at the project site. In the event the receiving party is not able or available to take receipt of products, the customer shall immediately take receipt of the turnover products and shall be responsible for the distribution of said products to the appropriate party.

5.5 Security

Project/jobsite security and protection shall be the responsibility of the general contractor and/or the customer. The SEF supplier shall take all reasonable precautions to ensure their products and tools are secured and protected for the duration of the project.

6.0 Installation Sequence Coordination with other Trades

The SEF supplier shall inspect the project site during the course of the project. The SEF supplier shall take any field measurements required to ensure the proper placement and fit of finished product at the project site. If any field conditions or measurements vary more than 3" from the construction documents or SEF shop drawings, or any other conditions are discovered that would lead to a significant change in the finished product, the SEF supplier shall notify the customer and work together to determine the appropriate resolution. At the conclusion of the project, the SEF supplier shall provide "as-built" drawings reflecting all changes made to the products to accommodate field conditions.

6.1 Scientific Equipment and Furniture Supplier (SEF Supplier)

The installation of Scientific Equipment and Furniture is primarily a carpentry trade. The specific scope of work for which the SEF Supplier shall be responsible for is dictated by the customer and project requirements and shall be outlined and agreed to prior to the placement of an order. In the course of a typical project, the SEF supplier may be required to cooperate and coordinate activities with the customer, the design team, the owner/occupant, contractors and with other trades. The SEF supplier shall endeavor to work harmoniously with all other parties at the project site. It is ultimately the responsibility of the customer to coordinate and mediate any conflicts among all of the trades at the project site, in accordance with the project requirements.

6.2 Mechanical and Electrical Trades

Where access is required through installed or partially installed laboratory furniture and equipment, unless otherwise agreed to, it shall be the service trades responsibility to remove said access panels/drawers, etc., where they occur, and properly replace such access panels/drawers at their own expense. The SEF supplier shall provide guidance and training, if required, to help ensure the access attained by others through the SEF supplier's products at the project site does not compromise the functionality, finish or performance of the SEF supplier's products nor does it impact the warranty coverage. The SEF supplier and the mechanical trades shall cooperate in order to maintain job continuity.

6.3 Protection of Finished Surfaces

Casework, including tables and mobile or movable cabinets and benches are considered to be finished products and shall be respected by all trades. The SEF supplier shall protect the products during the course of the project as dictated by the project requirements. The SEF supplier's products shall not be utilized by anyone at the project site as, or in lieu of, ladders, scaffolding, saw horses, storage containers, tool boxes, work tables, cutting surfaces, etc.

At no time shall the work surfaces be walked on. The general contractor is responsible for security and protection of the completed portions of the project site until the space is turned over to the owner/occupant. Liability for damage shall be borne by the damaging party. If it is indeterminable who caused the damage, it shall be the responsibility of the customer.

7.0 Installation Procedures

7.1 Installer Qualification

The installer shall have at least five years of continuous experience installing laboratory equipment using professional and accepted trade practices and be familiar with SEFA's Recommended Practices. The installer may also be certified by a Scientific Equipment and Furniture Association Member (manufacturer or dealer) that hires the installer to perform the required scope of work.

7.2 Safety

The SEF supplier shall make the safety of its personnel the first priority at the project site. The SEF supplier shall ensure that all personnel employed by or representing the SEF supplier obey all site safety requirements and utilize appropriate personal protection equipment at all times. If the SEF supplier observes unsafe conditions or practices at the project site, it shall stop work and report these to the customer immediately.

7.3 Casework

7.3.1 Base Cabinets

The flatness of the floor is a critical factor in the fit and finish of the laboratory base cabinets and countertops. Prior to the start of the installation, the customer should verify the F-numbers for the floor flatness meet the project requirements but are no less than an FF 25 as defined by the American Concrete Institute ACI 117. The first step in setting floor mounted base cabinets, tables and lab benches is to establish the high point of the floor in a given space. Using the high point in the floor as a datum, the first cabinets are set and made level and plumb. Each modular unit shall have secure contact with the floor during the leveling process by the appropriate leveling device. The installer shall ensure he is following the instructions and guidelines of the manufacturer of the products, as well as the project construction documents. In the event the installer cannot install the products in accordance with these requirements for any reason, he shall contact the SEF supplier who shall work with the customer to determine an appropriate resolution. Upon completion of the base cabinet installation, the installer shall verify the function of all doors and drawers and other movable elements and related hardware, and make adjustments and corrections if required.

7.3.2 Wall Cabinets and Wall Shelving

The structural wall system, (including grounds/blocking), shall be capable of supporting the specified loads. Prior to installing wall mounted products, the installer shall verify that concealed blocking is installed in the correct location. If errors or omissions are found in the required blocking, the SEF supplier and the customer shall be notified in writing immediately. Establish the high point of the wall, and anchor the first cabinet at this point. If the wall surface varies more than 3/8-inch (10 mm) an immediate notification shall be made to the proper authorities at the job site pointing out this condition. Appropriate action shall be initiated promptly for correction of the discrepancy, at no cost to the SEF supplier/installer. Acceptable methods of fastening wall cabinets shall be as directed by the project specifications, or as standard and customary in order to provide a secure wall hung case capable of supporting specified weight loads. The cabinets shall be installed level and plumb and the faces of adjacent cabinets shall be aligned. Slotted shelf standards shall be installed level and parallel to ensure the shelves are hung level.

7.3.3 Tall Cabinets

Tall units shall be appropriately leveled with respect to the floor and secured to the wall in order to prevent tipping. Prior to installing wall mounted products, the installer shall verify that concealed blocking is installed in the correct

© SEFA - 5th Edition Desk Reference - Version 3.0

location. If errors or omissions are found in the required blocking, the SEF supplier and the customer shall be notified in writing immediately. The installer shall ensure he is following the instructions and guidelines of the manufacturer of the products, as well as the project construction documents. In the event the installer cannot install the products in accordance with these requirements for any reason, he shall contact the SEF supplier who shall work with the customer to determine an appropriate resolution. Upon completion of the base cabinet installation, the installer shall verify the function of all doors and drawers and other movable elements and related hardware, and make adjustments and corrections if required.

7.3.4 Tables

Tables shall be installed and set at the location and height shown on the approved shop drawing set provided by the SEF supplier.

7.3.5 Laboratory Benches

Laboratory benches that are adjustable in height shall be installed and set at the height shown on the approved shop drawing set provided by the SEF supplier. Unless otherwise agreed to with the customer, where laboratory benches are factory plumbed and/or wired with integrated utility services, the installer shall connect these services to the building feed if these connections do not require the use of tools (e.g. quick connections for hoses, straight blade or twist-lock plugs, etc.).

7.3.6 Mobile/Movable Cabinets

Cabinets that are movable or mobile shall be installed and set in place as shown on the approved shop drawing set provided by the SEF supplier.

7.3.7 Service Utility Distribution Systems

Service utility distribution systems provided by the SEF supplier (including ceiling service tiles, overhead service carriers, vertical service umbilicals, etc.) shall be installed in accordance with the approved shop drawing set and instructions provided by the SEF supplier. The SEF supplier and installer shall coordinate the connection of the building service feeds by other trades to and through the utility distribution systems.

7.4 Hazardous Storage Cabinets and Flammable/Solvent Storage Cabinets

The installer shall ensure he is following the instructions and guidelines of the manufacturer of the products, as well as the project construction documents. In the event the installer cannot install the products in accordance with these requirements for any reason, he shall contact the SEF supplier who shall work with the customer to determine an appropriate resolution. Upon completion of the base cabinet installation, the installer shall verify the function of all doors and drawers and other movable elements and related hardware, and make adjustments and corrections if required. Often times there is limited access to the area behind these cabinets after they are installed. The installer should coordinate the installation of these products with the customer and other trades. Metal cabinets used for flammable storage shall be securely installed and grounded by appropriate trade when necessary; if flammable chemicals are being dispensed directly from a cabinet then the container must also be grounded.

7.5 Cabinet Venting

7.5.1 Venting Cabinets

The venting of flammable storage cabinets is optional. For flammable storage cabinets NFPA 30 recommends the use of metal piping if the cabinet is to be vented. The venting of corrosive storage cabinets is required to prevent the accumulation of corrosive fumes in the cabinets and to prevent the migration of corrosive fumes out of the cabinet and into the room. When a plastic product for venting of corrosive storage cabinets is specified, it is recommended that polyolefin pipe be used. – See ASTM 1412. - PVC piping is not recommended for venting, as it will burn black if ignited and produce chlorine gas. See SEFA 11 (Liquid Chemical Storage) for more specifics on cabinet venting.

7.6 Fume Hoods

7.6.1 Pre-planning for fume hood installation

The necessary coordination shall be accomplished between the SEF supplier and the, plumbing, electrical and H.V.A.C trades to ensure access is available for its work. Fully assembled fume hoods may be too large to fit through the building to reach the installation location. Prior to the start of the project, the SEF supplier and installer shall plan and coordinate with the customer how the fume hood will reach its installation location. This may include the SEF supplier shipping the hoods knocked down, the installer disassembling and reassembling the fume hoods on site or the customer leaving out or removing building elements (door jambs, windows, etc.) to allow the fume hoods to reach the installation location.

7.6.2 Installation

For bench-mounted fume hoods, the supporting table frame or cabinets shall be set in the same manner as the base cabinets. The counter tops shall be securely fastened to the understructure, as recommended by the fume hood manufacturer, and leveled. Fume hoods are typically large and heavy and it is recommended that a lift table be utilized to raise the fume hood off of the floor and position it to be set in place upon the countertop. After the fume hood superstructure is set square, plumb and secured, the understructure shall be checked to ensure that the leveling devices remains in firm contact with the floor and the superstructure shall be checked for proper sash operation. For floor-mounted fume hoods, the fume hood itself or the work surface that it rests on (if applicable) shall be shimmed and leveled as necessary to ensure the fume hood is square and plumb and the sash operates correctly.

7.6.3 MEP Connections and Air Balancing

Laboratory fume hoods with plumbing and electrical services shall be connected to the building feeds by the appropriate trades. It is critical that the proper airflow volumes through the fume hood are set and maintained to ensure proper fume hood operation. Laboratory fume hood exhaust systems should be balanced with room exhaust systems and may be used in conjunction with room exhaust to provide the necessary room ventilation. If the laboratory control system provides for proximity sensors at the fume hoods, thereby reducing the face velocity through the open sash when users are not present at the fume hood face, fume control must still be maintained. Sufficient makeup air must be available within the laboratory to permit fume hoods to operate at their specified face velocities. The SEF supplier and installer shall cooperate with the project designated trades responsible for the HVAC connections, air balancing, airflow controls calibration and configuration.

7.6.4 Performance Testing

SEFA recommends the ANSI/ASHRAE 110 Methods of Testing Performance of Laboratory Fume Hoods for "as installed" evaluations of fume hood performance. Testing should be performed only after the airflow balancing has been completed for the fume hoods and the rest of the related HVAC systems. The airflow controls should be calibrated and configured and the room temperature controls should be set and operational prior to the start of fume hood performance testing. The customer shall be responsible for any additional costs for retesting if the hoods are tested prior to the HVAC system being fully operational and properly calibrated. It is recommended that an independent, qualified firm is hired to perform the fume hood testing to eliminate any conflict of interest that could arise from the SEF supplier testing his own products.

7.7 Work Surfaces (Counter Tops)

Laboratory work surfaces shall be leveled and shimmed as necessary. Shims under a work surface shall generally not exceed 1/8 inch, (3 mm). Appropriate fastenings shall be made after the work surface is leveled, per the work surface manufacturer's recommendations.

Connecting sections of the work surface shall be reasonably flush within the manufacturer's tolerances for the material used and respective fabrication process. Work surface shall be installed to achieve a uniform alignment of the front edge of the tops.

© SEFA - 5th Edition Desk Reference - Version 3.0

Overhang of counter edges, in relation to furniture and cutouts for sinks, service fittings and electrical outlets shall be consistent and as indicated on approved shop drawings and installed accordingly.

Common methods of installing work surfaces and finishing joints involve adhesive "z" clips or other mechanical devices. Slab types, (stone, epoxy, phenolic etc.), are fastened to understructures with appropriate adhesives, (silicone RTV sealant, epoxy cement, etc.). Wood, wood products core or fiber-cement tops are fastened to understructures with screws. Joints in work surfaces are typically grouted butt joints, or mechanically fastened joints. It is recommended that potable water be available in or near the rooms where counter tops are designated to be installed.

7.7.1 Mechanically Fastened Joints

Joints in plastic laminate, wood, stainless steel and similar tops shall be drawn tight and held in alignment by appropriate clamping devices such as tight joint fasteners. Appropriate sealant shall be applied to the joint surface to provide moisture, chemical resistance, and adhesive fastening. Alignment tolerances shall be +/- 0.010-inch (0.25 mm) in height of adjacent surfaces and 1/32-inch (0.8 mm) or less joint width.

7.7.2 Grouted Butt Joints

Joints in butted slab type work surfaces, (epoxy, stone, butted, phenolic etc.) shall be set to allow 1/8-inch +/- 1/16-inch (1.5 mm) joint width with adjacent surfaces aligned +/- 1/16- inch (1.5 mm) along length of joint. Joints shall be grouted with appropriate sealant, dressed neatly and smoothly. "Washout" of grout in joints shall not exceed 1/16-inch (1.5 mm).

7.7.3 Field Welded Stainless Steel Joints

Where stainless steel tops are specified to be field welded, the field joints shall be continuously welded, ground and polished to the same finish as the top. The resulting joint shall blend evenly with no buckling or discoloration.

7.8 Sink Bowls and Troughs

Appropriate sealant as specified or recommended by the SEF supplier shall be used at the joint between the work surface and sink bowls, typically silicone RTV sealant, or epoxy cement.

Under counter installations of epoxy, polyolefin or other sink bowls shall include supportive means other than the sealant as recommended by the SEF supplier.

When installing sinks at ADA locations consideration should be given to sink outlet (drain) location. Using a sink with a corner drain often facilitates ease of trap installation, as opposed to the center drain type, and keeps the plumbing out of the way of the user.

7.9 Installation of Laboratory Service Fittings

The installer responsible for the installation of laboratory service fittings shall follow good plumbing practice. Installers shall, in particular: Thoroughly clean and flush supply lines prior to installing fittings, as pipe shavings, scale and other debris can be carried through a pipe and into a faucet or valve when the plumbing system is activated. Such foreign matter can damage valve components and interfere with the proper operation of the fitting.

Secure the fitting to a counter top or wall using the locknut and lock washer provided by the manufacturer. Tighten the locknut sufficiently to secure the fitting to the counter or wall, but care shall be taken not to over-tighten.

Observe the manufacturer's recommended test and working pressures for fittings. Testing or using a fitting at pressure for which it is not designed can result in leakage or failure.

Clean fittings using a soft cloth and soapy water. Use of abrasives, detergents or other cleaners can damage the finish on a fitting. Solvents shall not be used in or near a fitting, as solvents can dissolve lubricants used in the valve mechanism of a fitting.

Care must be used when installing the fixtures so as not to scratch the surface finish of faucets or valves. Refer to the manufacturer with regards to proper tools to remove serrated tips, aerators and aspirators with a corrosion resistant finish.

7.10 Traps and Dilution/ Neutralization Tanks

The installer responsible for installing the traps shall carefully inspect them prior to installation for all gaskets and o-rings, which may be inserted loose inside the trap to prevent these small parts from becoming lost in shipment. Connect traps to minimum 1-1/2 acid waste piping which conforms to ASTM 1412 standard.

Dilution and Neutralization tanks shall be placed on flat surfaces of sufficient strength to support the weight of a full tank. They shall never be suspended from the plumbing.

Neutralization tanks shall be placed in position, filled with water then the neutralization media added. The media shall be loaded into the tank in such a manner as to not damage the tank, the tank top, inlet and outlet connections, dip pipe, or the vent. The water added for this procedure is intended to slow down the impact of the limestone chips, but it is not necessary for the neutralization process. This neutralization material should fill the tank from its bottom to with-in one inch below the bottom of the outlet, and have a high, (90%+), calcium carbonate content.

Fittings marked with connections designed to be tightened by hand shall not be installed using tools or be over-tightened, as over-tightening can cause the fittings to leak.

7.11 Related Equipment

Related equipment shall be installed according to the respective manufacture's recommended installation procedure. Care shall be exercised to protect the surfaces of all equipment, (casework– SEFA 8, tops – SEFA 3 etc.), being installed. Reference the specific SEFA Recommended Practices for the item being installed for any suggested protection methods.

8.0 Project Completion and Close-out

It shall be the responsibility of the SEF supplier or installer to remove the packaging debris and other waste resulting from its work. The area shall be, where possible, left in a "broom clean" condition. This debris shall be placed in acceptable containers, either for recycling or general disposal. Recyclable products shall be in appropriate containers by material type and not be mixed with other debris. The container or dumpster will be provided by the owner/contractor at no cost to the SEF supplier. The SEF supplier or his installer shall not be expected to clean up the debris of other trades.

8.1 Inspection Cycle

It is the responsibility of the GC or owner to provide a detailed project inspection and project punch list schedule to the laboratory casework supplier/installer within a reasonable time after installation is complete. The project inspection should not be scheduled until the laboratory casework and equipment installation has been completed.

8.2 Inspection and Punch List

Upon substantial completion of the SEF supplier's work, the customer and/or the design team shall perform an inspection of the work and create a punch list identifying any deficiencies in the work that require correction before final acceptance. The customer and design team shall make every effort to capture all deficiencies on the first punch list. Multiple revisions and piecemeal additions to the punch list can result in a delayed completion and an inefficient prosecution of corrective action. The customer shall ensure that completed areas shall be secured and access strictly limited to essential personnel only until final acceptance. Upon receipt of the punch list, the SEF supplier shall acknowledge receipt and commence with corrective action. If the SEF supplier disagrees with any of the items identified on the punch list, he shall provide a written response addressing such items to the customer, within three (3) business days of receipt of the punch list. As the installer completes items listed on the punch list

© SEFA - 5th Edition Desk Reference - Version 3.0

he shall secure confirmation from the customer at the project site that the punch list item has been addressed.

8.3 Final Acceptance

Once all of the open punch list items related to the SEF supplier's work are completed and confirmed by the customer, the SEF supplier shall submit the completed punch list to the customer and request final acceptance of the finished work. The customer shall issue the final acceptance to the SEF supplier in writing.

8.4 Warranties

Manufacturer's warranties apply to the equipment as installed. Unless otherwise agreed to, the warranty term shall commence upon the occupancy of the space by the owner or the customer's final acceptance of the work, whichever occurs first. A covered defect found after final acceptance of the work, within the warranty term, shall be remedied as part of the warranty provisions of the manufacturer, as applicable. If items of equipment are separately warranted by other than the SEF supplier, the warranty documentation shall be provided to the customer for the owner's protection and used in obtaining service, if required.

Scientific Equipment & Furniture Association
Recommended Practices

SEFA 3 - 2020
Laboratory Work Surfaces

SEFA SPELLS SAFE

SEFA World Headquarters
65 Hilton Avenue
Garden City, NY 11530

Tel: 516-294-5424
www.sefalabs.com

Table of Contents

	Page
Committee Members	**192**
Foreword	**193**
SECTIONS	
1.0 Scope and Purpose	**194**
2.0 Performance Criteria	**194**
2.1 Chemical/Stain Resistance	
2.1.1 Chemical/Stain Resistance Test	
2.1.2 Acceptance Level	
2.2 Abrasion and Scratch Resistance	
2.3 Ease of Cleaning	
2.4 Appearance	
2.5 Heat/Cold Resistance and Thermal Shock	
2.6 Flammability/Flame Spread	
2.7 Impact Resistance	
2.8 Load Bearing Capability	
2.9 Bacterial Resistance	
2.10 Water Absorption	
3.0 Fabricated Work Surfaces and Sinks	**196**
3.1 Fabricated Work Surfaces Guidelines for Tolerance (prior to installation)	
3.2 Sinks, Cupsinks and Special Use Sinks for Laboratories	
4.0 Recommended Storage, Handling and Installation Guidelines	**197**
5.0 General Description of Commonly Used Laboratory Work Surfaces & Sink Materials	**197**
5.1 Edge Grain Hardwood	
5.2 Epoxy Resin	
5.3 Fiber-Cement	
5.4 High Pressure Plastic	
5.5 Impregnated Natural Sand Stone	
5.6 Polyolefin Sinks	
5.7 Solid Phenolic Composite	
5.8 Solid Surface	
5.9 Stainless Steel	
5.10 Wood Fiber and Thermo Set Composite	
6.0 Protection, Care and Maintenance of Work Surfaces and Sinks	**198**
6.1 Protect surfaces and sinks prior to and during installation	
6.2 Care and Maintenance of Laboratory Work Surfaces and Sinks	
6.3 Reagents	
6.4 Removal of stains	
6.5 Extreme Temperatures	
7.0 References	**198**

SEFA 3—Laboratory Work Surfaces Committee Members

Co-Chairs

Hank Von Der Bruegge, Durcon, Incorporated

Arnulf Penker, Fundermax, GmbH

American Epoxy Scientific

Cannon Design

Carlos Arboles

Case Systems

Chang Consulting

C.L. Andrews

Custom Diamond International

Dalton Corporation

Diversified Woodcrafts

DLRGroup

Eagle MHC

HEMCO Corp.

Interdyne Systems

Kewaunee Scientific Corp.

LP, SrL

Mott Manufacturing

SMRT Architects & Engineers

Shanghai Road Ceramics

Sheldon Lab Systems

Simmons

TMI Systems Corp.

Trespa, BV

© SEFA - 5th Edition Desk Reference - Version 3.0

Foreword

SEFA Profile

The Scientific Equipment and Furniture Association (SEFA) is an international trade association comprised of manufacturers of laboratory furniture, casework, fume hoods and members of the design and installation professions. The Association was founded to promote this rapidly expanding industry and improve the quality, safety and timely completion of laboratory facilities in accordance with customer requirements.

SEFA Recommended Practices

SEFA and its committees are active in the development and promotion of Recommended Practices having domestic and international applications. Recommended Practices are developed by the association taking into account the work of other standard-writing organizations. Liaison is also maintained with government agencies in the development of their specifications.

SEFA's Recommended Practices are developed in and for the public interest. These practices are designed to promote a better understanding between designers, architects, manufacturers, purchasers, and end-users and to assist the purchaser in selecting and specifying the proper product to meet the user's particular needs. SEFA's Recommended Practices are periodically updated. The Recommended Practices are numbered to include an annual suffix which reflects the year that they were updated. SEFA encourages architects to specify these Recommended Practices as follows: "SEFA 3-2020".

SEFA Glossary of Terms

SEFA has developed a Glossary of Terms (SEFA 4-2020) for the purpose of promoting a greater understanding between designers, architects, manufacturers, purchasers and end users. The terms defined by SEFA are frequently used in contracts and other documents, which attempt to define the products to be furnished or the work involved. The Association has approved this Glossary in an effort to provide uniformity among those who use these terms. Where a specific Recommended Practice contains definitions which differ from those in the Glossary of Terms, then the definitions in the specific Recommended Practice should be used.

SEFA encourages all interested parties to submit additional terms or to suggest any changes to those terms already defined by the Association. The definitions should be used to help resolve any disputes that may arise or to incorporate the applicable terms in any contract or related documents.

SEFA Disclaimer

SEFA uses its best effort to promulgate Recommended Practices for the benefit of the public in light of available information and accepted industry practices. SEFA does not guarantee, certify, or assure the safety or performance of any products, components, or systems tested, installed, or operated in accordance with SEFA Recommended Practices or that any tests conducted under its Recommended Practices will be non-hazardous or free from risk. SEFA encourages the use of third party independent testing where appropriate.

Note : ***Testing as described in this document must be performed and documented by a SEFA-approved third party testing facility. See Page 36 of the SEFA Desk Reference 5th Edition Version 3.0, or visit us at SEFALABS.COM for the most current list of SEFA-approved test labs.***

1.0 Scope and Purpose

SEFA guidelines are intended to provide manufacturers, specifiers and users with specific information helpful in their evaluation of the safety, durability and structural integrity of laboratory casework and complementary items. While SEFA attempts to provide professionally appropriate information to manufacturers, specifiers and users, it is the sole responsibility of manufacturers, specifiers and users to determine the appropriateness of the information and interpretations of it for their use in determining which products and guidelines are appropriate for their intended uses. The scope of SEFA 3 is limited to work surfaces and sinks. Although SEFA attempts to be inclusive of all generic products normally used in laboratories and welcomes information about such products for inclusion in SEFA 3, SEFA does not represent that every potential product is included. The products included in this version of SEFA 3 are the following: for work surfaces—Edge Grain Hardwood, Epoxy Resin, Fiber Cement, High Pressure Laminate, Impregnated Natural Stone, Solid Phenolic Composite, Solid Surface, Stainless Steel, Welded Fiber and for sinks-- Epoxy Resin, Polyolefin, Solid Surface and Stainless Steel.

2.0 Performance Criteria Often Appropriate in the Selection of Work Surfaces and Sinks (included are specific test procedures which may be considered to assess these characteristics)

Depending on the user's needs, the following product performance criteria may be appropriate in the user's selection process along with supplier information and reputation, cost and other aspects important to users. SEFA's intent is to stimulate users to consider and define their needs and to encourage suppliers to provide information on commonly used tests in the laboratory industry to evaluate performance characteristics the user deems appropriate for its specific use. Once user needs are defined, appropriate information may be requested from suppliers. Other criteria may also be appropriate to a given laboratory user and such information should be requested of suppliers when needed. Common tests are stated for screening work surface and sink products dependent upon the users needs (criteria which is important to the user in their particular lab environment). In addition to requesting test results from suppliers appropriate to the user's needs, users should understand the validity and reliability of the test method and data and whether such data is merely "representative" or "certified" and what, if any warranty is given by the supplier.

2.1 Chemical/Stain Resistance

Users should consider the chemical and staining agents that might be used on or near the laboratory work surface or sink. Common guidelines can be found by referring to: The work surface manufacturer printed data for chemical and stain resistance, NEMA LD3-2000 for wood product chemical resistance, ASTM D3023 and ASTM C1378 for stain resistance or the most current versions. Because chemical and stain resistance is affected by concentration, time, temperature, humidity, housekeeping and other factors, it is recommended that users test samples in their actual environment with the substances they use.

2.1.1 Chemical/Stain Resistance Test

The purpose of the chemical stain resistance test is to evaluate the resistance a finish has to chemical spills.

Test Method A – For volatile chemicals – A cotton ball, saturated with the test chemical, was placed in a one ounce bottle (10mm x 7mm test tube or similar container). The container was inverted on the test material surface for a period of 24 hours. Temperature of test: 23° +/- 2°C (73° +/- 4°F). This method was used for the organic solvents.

Test Method B – For non-volatile chemicals – Five drops (1/4cc) of the test chemical were placed on the test material surface. The chemical was covered with a watch glass (25mm) for a period of 24 hours. Temperature of test: 23° +/- 2°C (73° +/- 4°F). This method was used for all chemicals listed below other than solvents.

© SEFA - 5th Edition Desk Reference - Version 3.0

Test No.	Chemical Reagent	Test Method
1.	Acetate, Amyl	A
2.	Acetate, Ethyl	A
3.	Acetic Acid, 98%	B
4.	Acetone	A
5.	Acid Dichromate, 5%	B
6.	Alcohol, Butyl	A
7.	Alcohol, Ethyl	A
8.	Alcohol, Methyl	A
9.	Ammonium Hydroxide, 28%	B
10.	Benzene*	A
11.	Carbon Tetrachloride	A
12.	Chloroform	A
13.	Chromic Acid, 60%	B
14.	Cresol	A
15.	Dichloracetic Acid	A
16.	Dimethylformamide	A
17.	Dioxane	A
18.	Ethyl Ether	A
19.	Formaldehyde, 37%	A
20.	Formic Acid, 90%	B
21.	Furfural	A
22.	Gasoline	A
23.	Hydrochloric Acid, 37%	B
24.	Hydrofluoric Acid, 48%	B
25.	Hydrogen Peroxide, 30%	B
26.	Iodine, Tincture of	B
27.	Methyl Ethyl Ketone	A
28.	Methylene Chloride	A
29.	Monochlorobenzene*	A
30.	Naphthalene	A
31.	Nitric Acid, 20%	B
32.	Nitric Acid, 30%	B
33.	Nitric Acid, 70%	B
34.	Phenol, 90%	A
35.	Phosphoric Acid, 85%	B
36.	Silver Nitrate, Saturated	B
37.	Sodium Hydroxide, 10%	B
38.	Sodium Hydroxide, 20%	B
39.	Sodium Hydroxide, 40%	B
40.	Sodium Hydroxide Flake	B
41.	Sodium Sulfide Saturated	B
42.	Sulfuric Acid, 33%	B
43.	Sulfuric Acid, 77%	B
44.	Sulfuric Acid 96%	B
45.	Sulfuric Acid, 77% & Nitric Acid, 70% equal parts	B
46.	Toluene	A
47.	Trichloroethylene	A
48.	Xylene	A
49.	Zinc Chloride, Saturated	B

***If the use of this chemical is permitted by law in the country where the testing is being performed.**

2.1.2 Acceptance Level

After 24-hours exposure, exposed areas were washed with water, then a detergent solution and finally with isopropyl alcohol. Materials were then rinsed with distilled water and dried with a cloth. Samples are numerically rated as follows:

0 – No Effect – No detectable change in the material surface.

1 – Excellent – Slight detectable change in color or gloss but no change in function or life of the surface.

2 – Good – A clearly discernible change in color or gloss but no significant impairment of surface life or function.

3 – Fair – Objectionable change in appearance due to discoloration or etch, possibly resulting in deterioration of function over an extended period of time.

Results will vary from manufacturer to manufacturer due to differences in composition and finish formulations and applications processes. Laboratory Grade work surface finishes shall result in no more than 4 Level 3 conditions. Individual test results for the specified 49 reagents will be verified with an established third party independent SEFA 3 test submittal form. Suitability for a given application is dependent upon the chemicals used in a given laboratory.

2.2 Abrasion and Scratch Resistance

Users should consider the likelihood of uses causing abrasion, wear or scratches to the work surface or sink. Common guidelines are found in ASTM C501, NEMA LD3-3.13-2000 and NEMA LD3.7-2000 or the most current versions.

2.3 Ease of Cleaning

While a regular schedule of maintenance and housekeeping is always recommended including cleaning up spills immediately, some laboratories, e.g., those working with pathogens and radioactive isotopes, may be required to select non-porous materials and smooth surfaces for their lab work surfaces. Common guidelines

include ASTM D4488, ASTM G122 and NEMA LD3-3.4-2000.

2.4 Appearance

Users should consider the importance of initial and long-term appearance on work surfaces and sinks. Housekeeping practices are also critical to maintaining appearance. Users should also consider whether the color of the work surface or sink is important and when it is, consult the work surface manufacturer for color availability. Sometimes performance characteristics are influenced by color so users should seek supplier's advice when selecting colors. Common guideline is ASTM F1037.

2.5 Heat/Cold Resistance and Thermal Shock

Users should ascertain the range of temperatures to which the work surface and sink may be exposed as well as the duration of the exposure at temperatures within the range. Also, if rapid changes in temperature may be encountered, e.g., dry ice in the sink, thermal shock should be considered. In addition, heat may cause blisters, cracks and breakdowns in the surface. Consult the work surface manufacturer for Hot Crucible and Bunsen Burner information. Commonly used guidelines for Heat Distortion are ASTM D648, ASTM C484 and Thermal Coefficient of Expansion ASTM D696.

2.6 Flammability/Flame Spread

Users should ascertain whether sources of flame may be encountered or if there are code requirements for the intended use. Common guidelines are ASTM E84, D3713, D5048, D3801, D635, UL 723 and NFPA 225.

2.7 Impact Resistance

Users should consider the likelihood and nature of objects impacting the work surface and sinks. Common guidelines are ASTM D256, D4508, D5420, D628, E1321 and Rockwell M hardness ASTM D785.

2.8 Load Bearing Capability

Users should consider the maximum loads that the work surface and sink will have to bear. The extent of support underneath the work surface and sink should also be included in the assessment. Common guidelines are: Compressive Strength ASTM D695 (the measure of resistance to a crushing force), Flexural Strength ASTM D790 (resistance to bending stresses), Tensile Strength ASTM D638 (amount of pull required to break a sample of material).

2.9 Bacteria Resistance

Users should consider the importance in their use of the work surface's and sink's ability to resist, support or promote bacterial growth and to be decontaminated or disinfected. Common guidelines are ASTM E1428, ASTM G-22 ANSI Z124.6, and NSF51.

2.10 Water Absorption

Users should consider the effects of moisture on work surfaces and sinks. A common guideline is ASTM D570.

3.0 Fabricated Work Surfaces and Sinks

3.1 Fabricated Work Surfaces Tolerance (prior to installation)

Guidelines prior to installation shall be in accordance with fabricator's standards.

Color, Texture, Finish, Edge Detail and Drip Groove: See individual manufacturer's guidelines for a detailed description. It is further suggested that before specifying any material, samples be obtained and approved.

3.2 Sinks, Cupsinks and Special Use Sinks for Laboratories

3.2.1 It is recommended that all sinks for laboratory use shall be provided with a drain outlet measuring no less than 1-1/2" diameter. Drain fittings shall conform to ANSI 124.6 sec 4.1.1 connection test.

© SEFA - 5th Edition Desk Reference - Version 3.0

3.2.2 Laboratory sinks shall be fabricated to have an internal basin fall of no less than one degree to allow for proper draining.

3.2.3 The laboratory sinks shall have a load bearing capacity of 1-1/2 times the maximum volume of water weight that the sink can hold. A gallon of water is 231 cubic inches and is 8.3 pounds.

3.2.4 Sinks shall be provided with a plug and strainer, overflow that is either integral with inlet located two inches below the top of the sink and back flow preventer, or with a standpipe overflow terminating two inches below the top of the sink (Exclude cupsinks, people ask for stoppers and a cupsink is a disposal sink)

3.2.5 Sink support and mounting shall be per manufacturer's recommendations.

3.2.6 ADA requirements: Refer to ADA section of recommended practice.

4.0 Recommended Storage, Handling and Installation Guidelines

Refer to Current SEFA 2 Installation Recommended Practices.

5.0 General Description of Commonly Used Laboratory Work Surface and Sink Materials

5.1 Edge Grain Hardwood

Multiple strips of solid edge grain hardwood glued together which can be finished in penetrating oil or clear synthetic finish.

5.2 Epoxy Resin

Epoxy resin tops and sinks are produced from a composite of epoxy resin, silica, inert fillers and organic hardeners. Material is cast and cured in ovens at elevated temperatures. Material is homogeneous throughout and non-absorbent.

5.3 Fiber-Cement

Fiber-cement tops are integrally pigmented fiber cement sheets formed by utilizing either the filter press or Hatcheck process. Material is steam cured in an autoclave oven in order to accelerate the curing cycle of cement.

5.4 High Pressure Plastic Laminate

High pressure plastic laminate tops are made from melamine-impregnated surface papers pressed over phenolic-impregnated kraft paper layers. The back is sanded to facilitate bonding to the top of suitable substrate.

5.5 Impregnated Natural Sand Stone

Impregnated natural sand stone tops are produced from stone, free of veins or seams and impregnated with a resin with additional surface coatings baked at a high temperature to polymerize the resins and harden the stone.

5.6 Polyolefin Sinks

Sinks formed from a class or group name for thermoplastic polymers, derived from simple olefins, most predominant are polyethylene and polypropylene for laboratory use.

5.7 Solid Phenolic Composite

Solid phenolic composite tops are a compression molded composite of a homogeneous core of organic fiber reinforced phenolic and may contain one or more integrally cured surfaces that are non-porous.

5.8 Solid Surface

Solid surface tops and sinks are produced from a composite of natural minerals, acrylic and/or polyester resin, or epoxy resin, free from internal strengthening fibers, and pigment. The resulting product is homogenous throughout, renewable, and non-porous. Where appropriate, solid surface may feature inconspicuous seams of similar composition.

5.9 Stainless Steel

Stainless steel tops and sinks are usually fabricated from 14 to 18-gauge type 304 or 316 series stainless steel. Surfaces are integrally formed with all seams fully welded with stainless steel fillers, ground smooth, and blended to a #4 mill finish (solder or compounded fillers not acceptable).

5.10 Wood Fiber and Thermo Set Composite

Wood fiber and thermo set composite tops are made of processed wood fiber substrate surrounded by a layer of reinforced thermo set resin and an acid resistant outer coating.

6.0 Protection, Care and Maintenance of Work Surfaces and Sinks

6.1 Protect surfaces and sinks prior to and during installation.

Never allow tradesman to walk on them or use them as a workbench or scaffolding, etc. Supplier is not responsible for damage to surfaces or sinks from tradesmen after installation and before acceptance.

6.2 Care and Maintenance of Laboratory Work Surfaces and Sinks

A regular schedule of cleaning and maintenance is the most effective means to prolong the surface life and attractiveness of all laboratory work surfaces and sinks for many years. Consult the supplier for suggested cleaning methods.

6.3 Reagents

Do not allow reagents to remain in contact with the working surface or sink longer than necessary. Clean up spills immediately

6.4 Removal of stains

End users should consult the supplier for recommendations.

6.5 Extreme Temperatures

Avoid exposing work surface or sink to extreme temperatures or extreme changes in temperature.

See manufacturer's recommendations for acceptable hot and cold temperature

7.0 References

ANSI- American National Standards Institute
1819 L Street, NW
Washington, DC 20036
www.ansi.org

ASTM-American Society for Testing & Materials
100 Barr Harbor Drive
West Conshohocken, PA 19428-2959
www.astm.org

NEMA- National Electrical Manufacturers Assoc.
1300 North 17th Street, Suite 1752
Rosslyn, VA 22209
www.nema.org

NFPA- National Fire Protection Association
1 Batterymarch Park
Quincy, MA 02169-7471
www.nfpa.org

U.L.- Underwriters Laboratories
333 Pfingsten Road
Northbrook, IL 60062-2096
www.ul.com

NSF- NSF
769 N. Dixboro Road
Ann Arbor, MI 48105-9723
www.nsf.org

© SEFA - 5th Edition Desk Reference - Version 3.0

Scientific Equipment & Furniture Association
Recommended Practices

SEFA 4 - 2020
Glossary of Terms

SEFA SPELLS SAFE

SEFA World Headquarters
65 Hilton Avenue
Garden City, NY 11530

Tel: 516-294-5424
www.sefalabs.com

Foreword

SEFA Profile

The Scientific Equipment and Furniture Association (SEFA) is an international trade association comprised of manufacturers of laboratory furniture, casework, fume hoods and members of the design and installation professions. The Association was founded to promote this rapidly expanding industry and improve the quality, safety and timely completion of laboratory facilities in accordance with customer requirements.

SEFA Recommended Practices

SEFA and its committees are active in the development and promotion of Recommended Practices having domestic and international applications. Recommended Practices are developed by the association taking into account the work of other standard-writing organizations. Liaison is also maintained with government agencies in the development of their specifications.

SEFA's Recommended Practices are developed in and for the public interest. These practices are designed to promote a better understanding between designers, architects, manufacturers, purchasers, and end-users and to assist the purchaser in selecting and specifying the proper product to meet the user's particular needs. SEFA's Recommended Practices are periodically updated. The Recommended Practices are numbered to include an annual suffix which reflects the year that they were updated.

SEFA Glossary of Terms

SEFA has developed this Glossary of Terms for the purpose of promoting a greater understanding between designers, architects, manufacturers, purchasers and end users. The terms defined by SEFA are frequently used in contracts and other documents, which attempt to define the products to be furnished or the work involved. The Association has approved this Glossary in an effort to provide uniformity among those who use these terms. Where a specific Recommended Practice contains definitions which differ from those in the Glossary of Terms, then the definitions in the specific Recommended Practice should be used.

SEFA encourages all interested parties to submit additional terms or to suggest any changes to those terms already defined by the Association. The definitions should be used to help resolve any disputes that may arise or to incorporate the applicable terms in any contract or related documents.

SEFA Disclaimer

SEFA uses its best effort to promulgate Recommended Practices for the benefit of the public in light of available information and accepted industry practices. SEFA does not guarantee, certify, or assure the safety or performance of any products, components, or systems tested, installed, or operated in accordance with SEFA Recommended Practices or that any tests conducted under its Recommended Practices will be non-hazardous or free from risk. SEFA encourages the use of third party independent testing where appropriate.

Abrasion Resistance: A measure of the resistance of the surface to wearing from articles slid across it. Can be determined by loss in weight or thickness caused by an abrasive agent moved across the surface following a fixed schedule

Acceptance Levels: The acceptance level for each performance criteria is based on the cumulative experience of actual field testing and laboratory results of SEFA members. Acceptance levels describe the expected outcome of each test procedure.

Access Opening: The part of the fume hood through which work is performed; sash or face opening.

Accessory: A component which can, at the discretion of the user be readily added, removed, or replaced and which when removed, will not prevent the fitting from fulfilling its primary function.

Acid Storage Cabinets: Cabinets in which Acids are stored to avoid having large quantities of hazardous material in the laboratory work area. This reduces the risk of personnel injury or damage to the work area of the laboratory.

Aerator: Any of a number of types of devices designed to deliver a mixture of air and water, at a specific G.P.M. rate. (May not be allowed in certain applications or jurisdictions.)

Air Foil: Curved or angular member(s) at the fume hood entrance. A horizontal member across the lower part of the fume hood sash opening. Shaped to provide a smooth air flow into the fume chamber across the work surface.

Air Gap: The unobstructed vertical distance through the free atmosphere between the lowest opening from any pipe or faucet supplying water to a tank, plumbing fixture or other device and the flood level rim of the receptacle.

Air Volume: Quantity of air normally expressed in cubic feet per minute (cfm)

Angel Panel Mount: A type of mounting unit at a 30 degree or 45 degree angle to the table top.

Angle Stops: See angel valve

Angle Valve: A 90 degree valve, its inlet and outlet ports at 90 degrees with the operating stem at 180 degrees to the inlet port.

ANSI/ASHRAE 110–2016: A fume hood performance test developed and promulgated by the American Society of Heating, Refrigerating, and Air Conditioning Engineers and The American National Standards Institute.

ANSI/BIFMA: ANSI is the American National Standards Institute. Approval of an American National Standard requires verification by ANSI that the requirements for due process, consensus, and other criteria for approval have been met by the standards developer. BIFMA is the Business and Institutional Furniture Manufacturer's Association, an association of manufacturers of desk products and the like.

Anti-Siphon Vacuum Breaker: A device or means to prevent back siphonage of water. (See Vacuum Breaker; check local codes for use and applications for vacuum breaker types).

Apparatus: A machine or group of machines and accessories.

Approved: Acceptable to the authority having jurisdiction.

Arithmetic Mean: A number obtained by dividing the sum of a set of quantities by the number of quantities in a set; average.

Aspirator: A device supplied with fluid under positive pressure which passes through an integral orifice or "construction" causing a partial vacuum. (Check local codes for use and applications for vacuum breaker types.)

ASTM: American Society for Testing and Materials.

Authority Having Jurisdiction: An organization, office or individual responsible for enforcing the requirements of a code or standard, or for approving equipment, materials, and installation, or a procedure.

Auxiliary Air: Supply or supplemental air delivered to a laboratory fume hood to reduce room air consumption.

© SEFA - 5th Edition Desk Reference - Version 3.0

Baffle: Panel located across the rear wall of the fume hood chamber interior and directs the air flow through the fume chamber.

Ball Type Valve: Valve used for the purpose of controlling gases or water. The seal is achieved by the use of a spherical "ball" which is positioned between two (2) gasket type devices which are within body housing and prevent bypass of fluids or vapors.

Base Cabinets: A base cabinet is a storage device consisting of two ends, a back, and a face. The face may be open, to access the storage area, or may be outfitted with one or more drawers and/or door(s). The base cabinet may or may not include a top. A base cabinet is always mounted on the floor and normally supports a surface. The top surface is normally no more than 42" (1,066.8mm) off the floor surface.

Blower: Air moving device, sometimes called a fan, consisting of a motor, impeller and housing.

Broom Clean: A condition in an interior area in which surface debris has been removed by dry methods.

BS 7258: A fume hood containment test developed by the British Standard Association, used in most commonwealth countries.

Built-In Fitting: A fitting, the body of which is concealed behind the finished wall.

Bypass: Compensating opening in a fume hood that functions to maintain face velocity as the sash is raised or lowered.

Cabinet Depth (Deep): Given a front, bottom, two sides, and a top, the cabinet depth is a measure of the side of the cabinet, in its normal upright position, from the back to the front.

Cabinet Height: Given a front, bottom, two sides, and a top, the cabinet height of the side of the cabinet in its normal upright position, from the bottom to the top, excluding any additional surface.

Cabinet Width: Given a front, bottom, two sides, and a top, the cabinet width is a measure of the front of the cabinet in its normal upright position from one side to the other.

California Type Hood: A rectangular enclosure used to house distillation apparatus that can provide visibility from all sides with horizontal sliding access doors along the length of the assembly.

Canopy Hood: Ventilating enclosure suspended above work area to exhaust heat, vapor or odors. This device is not a laboratory fume hood, rather is defined as a laboratory exhaust device.

Capture Velocity: Speed of air flowing past the face opening through a fume chamber / laboratory exhaust device at a speed necessary to capture generated fume vapors and/ or particulates and directed to the exhaust outlet. Measured in feet per minute (fpm) or meter per second (mps).

Casework: Base and wall cabinets, display fixtures, and storage shelves. The generic term for both "boxes" and special desks, reception counters, nurses stations and the like. Generally includes the tops and work surfaces.

Celcon®: An acetyl copolymer used for distilled water. Celcon® is a high strength, crystalline, thermoplastic resin that contains properties to resist chemicals most commonly used in laboratories, and producing low leachate levels.

Centerset Fitting: An exposed combination supply fitting for assembly through the top or deck of a fixture.

Chase (Plumbing Area): Space located behind the back of the base cabinet or in a vertical enclosure used to house plumbing or electric lines.

Char Resistance: The ability of a top to withstand surface deterioration due to elevated temperatures.

Check Valve: A valve that permits flow in one direction, but that closes automatically to retard or obstruct the flow of fluid in a reverse direction.

Cold Rolled Steel: Sometimes referred to as Cold Drawn. Cold Drawn is the process of cold forming steel parts wherein plastic flow occurs over a curved axis.

Cold Water: For test purposes, water at a temperature of 40 degrees F. to 70 degrees F. (5 degrees C. to 21 degrees C.)

Composition Core: A core material using particleboard.

Combination Faucet: A supply fitting with more than one supply inlet delivering a mixture of hot and cold water through a single spout.

Combination Hood: A fume hood assembly containing a bench hood section and a walk-in section.

Combination Sash: A fume hood sash with a framed member that moves, vertically housing two or more horizontal sliding transparent viewing panels.

Combination Unit: A base unit of the type that has both doors(s) and drawer(s)

Combination Fitting or Faucet: A supply fitting with more than one supply inlet delivering a mixture of hot and cold water through a single spout. May also be referred to as a "mixing faucet."

Concealed Fittings: A fitting with body mounted beneath or behind the fixture or table top.

Corrosion Resistant Finishes: Corrosion resistant finishes are organic coated finishes applied to all exposed surfaces of laboratory products such as service fitting, either colored or clear. The finish can be epoxy, epoxy/polyester hybrid, or polyester.

Counter Mounted Cabinet: A counter mounted cabinet is a wall cabinet [usually with a height of approximately 48" (1,219.2mm)] and is typically mounted on the work surface or shelf, as in a reagent shelf)

Countertop: Work surface resting on a base cabinet normally 36" (91.4cm) high for standing, 34" (86.4cm) for ADA or 30" (76.2cm) for seated height.

Critical Level: The level at which polluted water, entering through an outlet from the supply fitting, will flow back to the supply lines by gravity and/or any negative pressure in the supply line when the water control valve is wide or fully open.

Cross Drafts: Air draft that flows parallel to or across the face opening of the fume hood.

Cupboard (Door Unit): The portion of the cabinet with no drawer(s) and may be enclosed by door(s).

Customer: Can be any one or combination of these listed: Architect, Buyers, Contractors, Engineers, End Users, Specifying Engineers, Purchasers, Construction Mangers or Owners.

Damper: Device installed in a duct to control air flow volume.

Delivered and Installed: The Laboratory Furniture and Equipment Contractor shall be responsible for coordinating the shipment and shall file freight damage claims as necessary. Materials may be shipped FOB origin factory or FOB destination, please refer to proposal or contract for details.

Demonstration Hood: A vented enclosure used for student demonstrations that has visibility on at least two sides, used primarily in schools. This device is not a laboratory fume hood, but is considered to be a laboratory exhaust device.

Density: The weight of one cubic inch of finished material (or gr per cc).

Dilution Tank: Tank basins in which highly concentrated wastes are mixed with wastes from other laboratory areas to produce diluted solutions.

Distillation Hoods: A laboratory fume hood that provides a work surface approximately 18 inches (45.7 cm) (0.457 m) above the room floor, to accommodate tall apparatus.

© SEFA - 5th Edition Desk Reference - Version 3.0

Double Ledge Faucet: Single shank water faucet which supplies hot and cold water to a sink or other location where required.

Double Panel Flange: Similar to single panel flange but with two outlets.

Drain Line: The pipe or tubing used to connect the sink tail piece or trap to the building / plumbing waste line.

Drawer: A sliding storage box or receptacle opened by pulling out and closed by pushing in.

Dual Entry Hood: A bench type fume hood that has two sash openings, usually on opposite sides.

Duct: Round, square, oval or rectangular tube used to enclose moving air.

Duct Velocity: Speed of air moving in a duct, usually expressed in feet per minute (fpm) or meters per seconds (mps)

Elbow: A fitting that forms an angular bend.

Electrical Service Fixture: Outlet or other electrical device directly attached to the laboratory furniture and equipment.

Emergency Spray Unit: A flexible hose type device used for flushing the face or clothing of person who accidentally comes into contact with acid or similar dangerous substances.

Exhaust Collar: Connection point between duct and fume hood through which all exhaust air passes.

Exposed Fitting: A fitting where the body is mounted on or above the finished surface.

Face: Front access or sash opening of laboratory fume hood. Face opening measured in width and height. See sash or access opening.

Face Velocity: Average speed of air flowing perpendicular to the face opening and into the fume chamber of the fume hood and expressed in feet per minute (fpm), measured at the plane of the face or sash opening.

Fan: Air moving device, usually called a blower, consisting of a motor, impeller and housing.

Faucet: A valve device designed to control and/ or guide the flow of water.

Filler Panel: A panel used to close an open area between a unit and a wall or between two units.

Filter: Device to remove particles from air.

Fitting: See Service Fitting

Fixture: A sink or receptacle that receives water or water-borne waste and discharges into a drainage system. Note: The term fixture has long been used in the laboratory field to describe a service fitting. (See: Service Fitting.)

Flame Resistance: The ability of the material to withstand flame spread.

Flammable/Solvent storage cabinets: Cabinets in which heat ignitable materials are stored to resist exposure to ignition sources and restrict access to unauthorized personnel if lockable.

Flange-Faucet: A faucet flared out as in a flange shape so as to cover over edges of mounting holes or to provide a support.

Flood Level Rim: The flood level rim is the top edge of a receptacle over which water would overflow.

Foot Valve: A water control device operated by one's foot. (Also see: Pedal Valve.)

Free on Board Destination: F.O.B. destination, freight prepaid. The laboratory Furniture and Equipment Contractor shall pay freight costs. Customer accepts title and equipment at F.O.B point of the job site and laboratory supplier is responsible for filing and collecting freight claims.

Free on Board Origin: F.O.B. origin, freight prepaid and added to invoice. The laboratory Furniture and Equipment Contractor shall prepay freight cost and include it as a separate invoice item. Customer accepts title and equipment at F.O.B point loaded onboard transportation vehicle.

Customer is responsible for filing and collecting freight claims.

Free Standing: Requiring no support or fastening to other structures.

Front Load Valve: Valves usually installed in the walls of fume hoods for controlling gases or water, with the handle and cartridge having access from the face of the hood, without the need to remove the entire valve from the hood.

Fuel Gas: A gas used to supply heat.

Fume Chamber: The interior of the fume hood measured in width, depth, and height constructed of material suitable for intended use.

Fume Removal System: A fume hood exhaust engineered device to effectively move air and fumes consistently through laboratory exhaust device, duct and exhaust blower.

Note: Room air, make-up air, auxiliary air (if used) and pollution-abating devices (if used) are integral parts of a properly functioning system and should be considered when designing a fume removal system.

Furnish: Supply to contractors; not installed by Laboratory Furniture Equipment Manufacturer or local representative.

Gas Cock: A ground key or ball type shutoff valve used to control the flow of gas services, low pressure air or vacuum.

Glove Box: Total enclosure used to confine and contain hazardous materials with operator access by means of gloved portals or other limited openings; this device is not a laboratory lab exhaust device or fume hood.

Gooseneck: A piece of pipe or tubing the shape of which conforms to the letter "U", is part of a faucet or fixture, and whose function is to direct the flow of water and other laboratory services to a certain point. It may be of the rigid or swivel type.

Grounds/Blocking : Reinforcement within walls to provide adequate anchorage for wall-hung or secured equipment. Specific material to be determined by the structural designer.

Ha Test: This is an abrasion resistance test in which an abrasive wheel with uniform predetermined weight is applied against the surface for a predetermined time to establish the depth of penetration.

Hand Tools: Tools, such as a screwdriver, key wrench, flat-jawed wrench, strap wrench and pliers, which are normally carried by tradesmen for installation and maintenance.

Hardness: A measure of resistance of the surface and body of the material to denting or scratching, determined by the diameter (or depth) of a spherical (or other) point pressed against the surface with known load or the width of a groove produced by a tool of known contour.

Hardware: Manufactured articles used in producing and installing cabinets. Such articles include items such as screws, pulls, hinges, and drawer slides.

Hazardous Storage Cabinets: General term for cabinets that control and restrict access to chemicals that might be harmful or dangerous to students or other personnel not qualified to have access. These chemicals may include but are not limited to Corrosives, Acids, Bases and other chemicals found in the Laboratory

Heat Resistance: The temperature that a top can withstand heat without deteriorating.

High Density Shielding: A barrier made of lead.

High Pressure Laminate: Laminated thermosetting decorative sheets for lamination to a selected core for panel, shelf and top constructions.

Hose Cock: A ground key, needle type or ball type shutoff valve used to control the flow of air, vacuum or gas services.

Imbalance: Condition in which ratio of quantities of supply air is greater or lesser than the exhaust air.

© SEFA - 5th Edition Desk Reference - Version 3.0

Impact Resistance: A measure of toughness that is determined by the energy absorbed in causing a fracture under an impact blow.

Index Button: An indicator of the services being supplied by the fitting to which it is attached. Normally color coded.

Integral Vacuum Breakers: A vacuum breaker which is formed as a unit with the faucet gooseneck. (Check application for local codes.)

Job Site: Physical location or building site where laboratory furniture is to be installed.

Joinery: The junction of two pieces of material intended to be permanently connected.

Knee Space Panel: A panel used to close the area under an apron, to enclose the plumbing space, or to shield the knee space area.

L**aboratory Furniture:** Furniture designed, manufactured and tested for installation and used in a laboratory.

Laboratory Furniture and Equipment: The casework, fume hoods, work surfaces, sinks, fixtures, shelves, and associated hardware as detailed.

Laboratory work area – The main area of the laboratory used during experiments, testing or teaching.

Laminate: A product made by bonding together two or more layers (laminations) of material or materials.

Laminar Flow Cabinets: Name applied to clean bench or biological enclosures. This device is not a laboratory exhaust device.

Latch: A piece of hardware designed to hold a door or drawer closed.

Leveling Screws (Levelers): Threaded components designed to allow adjustment of the cabinet vertically as needed for leveling.

Liner: Interior lining used for side, back and top enclosure panels, exhaust plenum and baffle system of a laboratory fume hood or chemical resistant cabinet.

Make-Up Air: Air needed to replace the air taken from the room by laboratory fume hood(s) and other air exhausting devices.

Manifold: A fitting or pipe with many outlets or connections relatively close together.

Manometer: Device used to measure air pressure differential, usually calibrated in inches of water.

May: When used indicates an alternate requirement or option.

Medium Density Fiberwood (MDF): Wood particles reduced to fibers in a moderate pressure steam vessel combined with a resin and bonded together under heat and pressure.

Mixing Valve: A valve or faucet designed to mix liquids by means of automatic or manual regulation.

Monel: An alloy of approximately 67% nickel, 28% copper and 5% other elements that is made by direct reduction from ore in which the constituent metals occur in these proportions.

Needle Hose Cock: A control device in which the opening, consisting of a small hole, is opened or closed by a needle or cone that is thrust into or is withdrawn from the hole. Normally used for fine control and/or high pressure gases.

Negative Air Pressure: Air pressure lower than ambient.

Neutralization Tank: Tanks that can be charged with marble or limestone chips with a high, (90%+), calcium carbonate content. As wastes are discharged into the unit, chips will react with the acid to form less corrosive materials.

Nipple: A short piece of threaded pipe.

Nominal Dimensions: Not all cabinet manufactures produce product to the identical dimensions. All dimensions given in this document are accurate to within five percent,

which is considered nominal.

Nozzle: The outlet from a faucet or hose so designed so that the issuing stream of water is thrown in a shape or size different from the diameter of the pipe.

Panel Flange: A type of mounting unit used where the back panel is constructed at a 90 degree angle to the table top.

Particleboard: A generic term for a panel manufactured from lignocellulosic material– commonly wood– essentially in the form of particles (as distinct from fibers) These materials are bonded together with synthetic resin or other suitable binder, under heat and pressure, by a process wherein the inter-particle bonds are created wholly by added binder.

Particulate Matter: Small, light-weight particles that will be airborne in low velocity air [approximately 50 fpm (.25 m/s)].

Pedal Valve: A device used to operate valves by means of the foot, may be either single or double, floor, ledge or wall mounted.

Pedestal: See Turret.

Permanent Damage: Destruction to material or joinery that would require repair in order to return to its original state.

Permanent Deformation: Deflection that has exceeded the limits of the product, thus changing the original shape of the product.

Permanent Deterioration: Erosion or corrosion of material such that the components will never return to the original shape of the material or product.

Permanent Failure: See "permanent damage"

Pipe Support: A rack of framework located in the service chase way used to support the service lines.

Pitot Tube: Device used to measure air pressure differential, usually calibrated in inches of water.

Plenum Chamber: Chamber used to equalize air flow.

Polyethylene: A plastic polymer of ethylene used chiefly for containers, fittings, sinks and interior fume hood liner.

Polypropylene: Material is a polyolefin which is generally high in chemical resistance. Material should conform to ASTM D-2146. This material is commonly used for acid waste piping as well as for deionized water.

Polyvinyl Chloride (PVC): A water insoluble, thermoplastic resin derived by the polymerization of vinyl chloride used chiefly for containers, fittings and piping.

Polyvinylidene Fluoride (PVDF): Material is a strong and abrasion resistant fluoropolymer. It is chemically resistant to most acids, bases and organic solvents, and is the preferred material for piping and faucets for ultra-pure water. Pure PVDF is an opaque white resin that is resistant to UV radiation, and is superior for non-contaminating applications.

Positive Air Pressure: Air pressure higher than ambient.

Potable Water: Water which is satisfactory for drinking, culinary and domestic purpose, and meets the requirements of the Health Authority having jurisdiction.

Pressure Gauge: Instrument for measuring the pressure of fluids, gases or air.

Pressure Regulator: Any device by means of which pressure may be regulated.

Primary Outlet: The outlet from the fitting on the discharge side of the valve.

Proper Authorities: The party(ies) designated by contract to approve additions, changes, or deletions to contracts, plans or specifications.

Pulls: Articles used to grasp the door or drawer (see also hardware).

© SEFA - 5th Edition Desk Reference - Version 3.0

Quick Connect: A device used in place of the serrated tip where quick connect and disconnect requirements are needed for water, air and non-corrosive gases.

Rack Resistance: The ability of a desk product to resist stresses that tend to make the product distort and the drawers become misaligned.

Rail: A bar extending from one side of a cabinet to the other.

Reagent: A substance used because of its chemical or biological activity.

Reagent Rack: A shelf, or shelves, provided at the back of wall assembly, or down the middle of center tables, island or peninsulas to provide storage for reagent bottles, with provision made for the support of mechanical or electrical service lines and service fittings as needed.

Reasonably: When used indicates using fair, and sensible methods within accepted industry standards and guidelines.

Related Equipment - Items not generally manufactured by the Scientific Equipment and Furniture Supplier, (SEF supplier), but furnished and/or installed as part of the SEF supplier's contract. These may consist of but are not limited to: instrumentation, environmental rooms, refrigeration systems, laboratory apparatus, etc.

Remote Control Valves: Valves usually installed in the service chase area of fume hoods with the control handles normally on the face of the hood which regulates and controls the flow of the services to the outlets in the interior of the fume hood.

Removable Back: A panel located on the inside back of the base cabinet which is removable in order to gain access to the service chase area.

Renewable Seat: A seat in a valve which can be removed and replaced with a tool.

Replaceable Interior Unit: A cartridge type assembly containing all the working parts of a valve.

Room Air: That portion of the exhaust air taken from the room.

Rough-Ins: The location for the point of connection for plumbing, electrical, or mechanical services within the casework service tunnel/ chase shall be located within fifteen feet (15') or as stated by local codes, whichever is less, of the final fixture location.

Rough-In Point: Individual or common supply of mechanical, electrical and heating, ventilating and air conditioning through wall, floor or ceiling, located within the equipment chase.

RTV Silicone Sealant: Silicone is an organic silicon compound highly resistant to heat, water, etc. Sealant hardens when exposed to air. RTV means, "room temperature vulcanizing" and will harden or cure without a heat gun or other heat source. Will form a permanent elastic watertight and weatherproof bond to many surfaces, such as glass, ceramic, metals, painted surfaces and plastics.

Sash: Moveable panel at the access opening of a laboratory fume hood.

Scientific Equipment and Furniture Supplier (SEF Supplier): Manufacturer, dealer, distributor or agents who provide laboratory furniture, equipment and fume hoods.

Shall: Where used, indicates a mandatory requirement.

Should: Where used indicates recommendation.

Sink Outlet: A flanged fitting that is recessed and sealed into the sink bottom to provide means of connecting sink to drainage system.

Scribe: A strip of matching material that is fitted to the wall on one edge and fastened to the casework on the other to make a tight enclosure to the structure next to it when casework abuts the walls, column, etc.

Scrubber, Fume: A device used to remove contaminants from fume hood exhaust.

Seat Disc: A disc or washer which when compressed against the seat makes a water tight joint.

Seat Faucet: The surface around or within the orifice in the faucet through which water or other liquid flows and against which the closing member, such as stem washer, is pressed or seated to terminate the flow.

Secondary Outlet: Any outlet from the fitting other than primary outlet, on the discharge side of the valve through which water may be discharged.

Self-Closing Faucet: A faucet which closes automatically when the faucet handle is released.

Serrated Tip (Nozzle): An outlet straight or angled, of graduated serrations which will accommodate laboratory hoses used in experimentation.

Service: The supplying of utilities or commodities such as water, air, gas, vacuum, and steam as required in hospital or laboratory functions.

Service Fittings and Fixtures: Service fittings include oxygen, gas, air, vacuum, and steam cocks, turrets, hot, cold and distilled water faucets, remote controlled valves, filter pumps, vacuum breakers, eye washers, shower heads, steam cones and steam baths, sinks, cup sinks, traps and plaster traps. Service fixtures include electrical convenience outlet boxes, electrical pedestals, "C" type conduits, single or duplex A.C. or D.C. receptacles, switches, variable voltage units and fluorescent tubes.

Service Fixture: Item of laboratory plumbing mounted on or fastened to laboratory fume hood.

Service Line: Pipe or tubing used to convey the service, gas or liquid, from the building service line to the service fitting on the laboratory furniture or equipment.

Service Strip: A rack or framework used to support the service line.

Service Tunnel or Service Chase: Area in back of or between the backs of base cabinets, under the working surface or within vertical voids provided to allow room for several lines.

Service Turret: An enclosure tht projects above the table top to provide room for the service line to be brought up throught the table top or be connected to the service fitings that are mounted on the outside of the enclosure.

Service Umbilical: A fully enclosed chase containing service lines extending from the ceiling area above the laboratory bench into the service tunnel of the same laboratory bench.

Shall: Where used indicates a mandatory feature.

Significant Surface: A finished exposed surface which if marred would spoil the appearnce of the fitting.

Single Control Mixing Valve: A fitting with a single control which shall serve to turn water on and off and to regulate volume and temperate flow.

Sink Outlet: A flanged fitting that is recessed and sealed into the sink bottom to provide means of connecting sink to drainage system.

Slot Velocity: Speed of air moving through slotted openings in lab exhaust devices such as fume hood baffle openings.
different products.

Smoke Candle: Smoke producing device used to allow visual observation of air flow.

Spot Collector: A small, localized ventilation hood usually connected by a flexible duct to an exhaust fan. This device is not a laboratory fume hood and should be considered a lab exhaust device.

Stainless Steel: Iron based alloys containing more chromium than the 12% necessary to produce passivity (less reactive), but less than 30%.

Static Pressure: Air pressure in laboratory fume hood or duct, usually expressed in inches of water.

Static Pressure Loss: Measurement of resistance created when air moves through a duct or exhaust device usually expressed in inches of water.

© SEFA - 5th Edition Desk Reference - Version 3.0

Stops: Valves used for the purpose of controlling the flow of water and which are part of the distributive plumbing system except as otherwise determined.

Straight Stops: See Straight Valves.

Straight Valves: Straightway valves used for laboratory services such as gas, air, water and steam which have their inlet and outlet port at a position 180 degrees from each other.

Strength: Known variously as "modulus of rupture" or "flexural strength:" and is an ultimate or breaking strength. Generally measured by supporting a strip of material across two supports and applying a load between these supports. By computation the strength values can be used to determine the load-carrying ability of the product and may be used to compare strengths of different products.

Submersion: Immersed in water.

Superstructure: The portion of a laboratory fume hood that is supported by the work surface.

Supplemental Air: Supply or auxiliary air delivered to a laboratory fume hood to reduce room air consumption. (Refer to local codes for proper application.)

Supply Nipple & Lock Nut: The threaded connecting units used for deck or panel mounting of laboratory fittings.

Supply Stops: For the purpose of controlling the flow of water and which are a part of the distributive plumbing system immediately adjacent to, or a part of, and preceding a fitting.

Tables: An article of furniture having a flat, horizontal surface supported by one or more support members (legs), and a frame (apron).

Table Top Hood: A small, spot ventilation hood for mounting on table tops. Used primarily in educational laboratories. This device is not a laboratory fume hood but could be considered an exhaust device.

Tall Cabinet (Full Height Unit): A tall cabinet is a storage device that consists of two ends, a back and a face. The face may be open to access the storage area or may be outfitted with one or more drawers and/or door(s). A tall cabinet is always mounted on the floor and is typically 84" (2,133.6mm) high.

Tail Piece: The connecting fitting used to connect the sink outlet to trap or drain line. Tail piece may be an integral part of the sink outlet or a separate piece.

Tank Nipple: See Supply Nipple.

Thermal Anemometer: A device for measuring fume hood velocity utilizing the principle of thermal cooling of a heated element as the detection element.

Thermal Shock: The ability of material to withstand sudden changes in temperature without cracking or spalling.

Threshold Limit Valve-Time Weighted Average (TLV-TWA): The time-weighted average concentration for a normal 8-hour workday or 40-hour week, to which nearly all workers may be repeatedly exposed, day after day, without adverse effect.

Titanium Tetrachloride: Chemical that generates white fumes used in testing laboratory fume hoods.

Torsion: The state of being twisted.

Total Pressure: Algebraic sum of velocity pressure and static pressure.

Toxic Resistance: The ability of a top to withstand emission of a toxic substance, if any, during chemical process.

Transport Velocity: Minimum speed of air required to support and carry particles in an air stream.

Turret: Type of mounting which allows the use of (1)-(2)-(3)-(4) hose cocks, needle hose cocks or straight stops, where installation of same are required either on the table top, back, or panel.

Uniformly Distributed: The application of forces such that weight is evenly applied to the subject surface even as the surface deflects.

Unobstructed Entry: A cabinet is deemed to be unobstructed if access to the entire storage area is completely without obstacle.

Upright Position: A cabinet oriented in its intended position.

Vacuum Breaker: A device to prevent the creation of a vacuum by admitting air at atmospheric pressure, used to prevent back siphonage.

Valve: A device by which the flow may be started, stopped, or regulated by a moveable part which opens or obstructs the passage.

Valve Seat: The port or ports against or into which a disc or tapered stem is compressed or inserted to stop flow of fluid or gas.

Velocity Pressure: Pressure caused by moving air in a laboratory fume hood or duct, usually expressed in inches of water.

Vent: Ducting or piping system designed to remove or change the air in an enclosed space like storage cabinets.

Walk-In Hood: A floor-mounted, full-height fume hood, designed to accommodate tall apparatus and permit roll-in of instruments and equipment.

Wall Cabinet: A wall cabinet is a storage device consisting of two ends, a back, a top, bottom, and a face. The face may be open to access the storage areas or may be outfitted with one or more door(s). The wall cabinet usually does not include a drawer. A wall cabinet is always mounted on a vertical surface such as a wall, a divider, panel or some other vertical structure. A wall cabinet is usually less than 48" (1,219.2mm) high.

Water: The liquid that descends from the clouds as rain; forms streams, lakes and seas; issues from the ground in springs, and is a major constituent of all living matter, and when pure, consists of an oxide of hydrogen H_2O, in the proportion of two atoms of hydrogen to one atom of oxygen. It is an odorless, tasteless, very slightly compressible liquid which appears bluish in thick layers. Freezes at 0 degrees C. and boils at 100 degrees C., and has a maximum density of 4 degrees C. and a high specific heat, contains very small equal concentrations of hydrogen ions, reacts neutrally and constitutes a poor conductor of electricity, a good ionizing agent.

Water Absorption: The percentage gain in weight of material immersed in water for a specified time. When the specific gravity of the product is known, water absorption can be used to determine the total void space. The absorption is neither a measure of the rate nor amount of chemical attack.

Water Outlet: A water outlet, as used in connection with the water distributing system, is the discharge opening for the water.

Weather Cap: Device used at the top of an exhaust stack to prevent rain from entering the stack end.

Work Space (Fume Hood): The part of the fume hood interior where apparatus is set up and fumes are generated. It is normally confined to a space extending from six inches (15.2 cm) (152mm) behind the plane of the sash(es) to the face of the baffle, and extending from the work surface to a place parallel with the top edge of the access opening.

Work Surface: The surface that a laboratory fume hood is located on and supported by a base cabinet. In the fume chamber the surface is recessed to contain spills.

Wrist Action Handle: A means of controlling a valve with the wrist or forearm.

Wye Fitting: Similar to double panel flange, but outlets are at 90 degrees or less.

© SEFA - 5th Edition Desk Reference - Version 3.0

Scientific Equipment & Furniture Association
Recommended Practices

SEFA 5-2020
SCOPE OF WORK

SEFA World Headquarters
65 Hilton Avenue
Garden City, NY 11530

Tel: 516-294-5424
www.sefalabs.com

SEFA SPELLS SAFE

Table of Contents

		Page
Foreword		**216**
Sections		
1.0	**Glossary of Terms**	**217**
2.0	**F.O.B. Origin**	**217**
2.1	**General Requirements**	
2.2	**Standard of Quality**	
2.3	**Conditions of Purchase**	
2.4	**Equipment and Service Fixtures Supplied By Laboratory Equipment Contractor Shall Include**	
2.5	**Equipment, Security and Work "By Others"**	
2.6	**Drawings**	
2.7	**Samples**	
2.8	**Inspection**	
3.0	**Delivered and Installed**	**220**
3.1	**General Requirements**	
3.2	**Standard of Quality**	
3.3	**Conditions of Purchase**	
3.4	**Equipment and Service Fixtures Supplied By Laboratory Contractor**	
3.5	**Equipment, Security and Work "By Others"**	
3.6	**Drawings**	
3.7	**Samples**	
3.8	**Inspection**	
4.0	**Delivered, Installed and Connected**	**223**
4.1	**General Requirements**	
4.2	**Standards of Quality**	
4.3	**Conditions of Purchase**	
4.4	**Equipment and Service Fixtures Supplied By Laboratory Contractor**	
4.5	**Equipment, Security and Work "By Others"**	
4.6	**Drawings**	
4.7	**Samples**	
4.8	**Inspection**	

Foreword

SEFA Profile

The Scientific Equipment and Furniture Association (SEFA) is an international trade association comprised of manufacturers of laboratory furniture, casework, fume hoods and members of the design and installation professions. The Association was founded to promote this rapidly expanding industry and improve the quality, safety and timely completion of laboratory facilities in accordance with customer requirements.

SEFA Recommended Practices

SEFA and its committees are active in the development and promotion of Recommended Practices having domestic and international applications. Recommended Practices are developed by the association taking into account the work of other standard-writing organizations. Liaison is also maintained with government agencies in the development of their specifications.

SEFA's Recommended Practices are developed in and for the public interest. These practices are designed to promote a better understanding between designers, architects, manufacturers, purchasers, and end-users and to assist the purchaser in selecting and specifying the proper product to meet the user's particular needs. SEFA's Recommended Practices are periodically updated. The Recommended Practices are numbered to include an annual suffix which reflects the year that they were updated. SEFA encourages architects to specify these Recommended Practices as follows: "SEFA 5-2020"

SEFA Glossary of Terms

SEFA has developed a Glossary of Terms (SEFA 4-2020) for the purpose of promoting a greater understanding between designers, architects, manufacturers, purchasers and end users. The terms defined by SEFA are frequently used in contracts and other documents, which attempt to define the products to be furnished or the work involved. The Association has approved this Glossary in an effort to provide uniformity among those who use these terms. Where a specific Recommended Practice contains definitions which differ from those in the Glossary of Terms, then the definitions in the specific Recommended Practice should be used.

SEFA encourages all interested parties to submit additional terms or to suggest any changes to those terms already defined by the Association. The definitions should be used to help resolve any disputes that may arise or to incorporate the applicable terms in any contract or related documents.

SEFA Disclaimer

SEFA uses its best effort to promulgate Recommended Practices for the benefit of the public in light of available information and accepted industry practices. SEFA does not guarantee, certify, or assure the safety or performance of any products, components, or systems tested, installed, or operated in accordance with SEFA Recommended Practices or that any tests conducted under its Recommended Practices will be non-hazardous or free from risk. SEFA encourages the use of third party independent testing where appropriate.

© SEFA - 5th Edition Desk Reference - Version 3.0

1.0 Glossary of Terms

Customer: Can be any one or combination of these listed: Architect, Buyers, Contractors, Engineers, End Users, Specifying Engineers, Purchasers, Construction Mangers or Owners.

Drain Line: The pipe or tubing used to connect the sink tail piece or trap to the building waste line.

Electrical Service Fixture: Outlet or other electrical device directly attached to the laboratory furniture and equipment.

Filler Panel: A panel used to close an open area between a unit and a wall or between two units.

Furnish: Supply to other contractors; not installed by Laboratory Furniture Equipment Manufacturer.

Integral Vacuum Breakers: A vacuum breaker which is formed as a unit with the faucet gooseneck.

Job Site: Physical location or building site where laboratory furniture is to be installed.

Knee Space Panel: A panel used to close the area under an apron, to enclose the plumbing space, or to shield the knee space area.

Laboratory Furniture and Equipment: The casework, fume hoods, work surfaces, sinks, fixtures, shelves, and associated hardware as detailed.

Pipe Support: A rack of framework located in the service tunnel used to support the service lines.

Reagent Rack: A shelf, or shelves, provided at the back of wall assembly, or down the middle of center tables, island or peninsulas to provide storage for reagent bottles, with provision made for the support of mechanical or electrical service lines and service fittings as needed.

Rough-Ins: The location for the point of connection for plumbing, electrical, or mechanical services within the casework service tunnel chase shall be located within fifteen feet (15') or as stated by local codes, whichever is less, of the final fixture location.

Service Fitting: Any device designed to control and/or guide the flow of water, steam, vacuum or gases.

Service Line: Pipe or tubing used to convey the service, gas or liquid, from the building service line to the service fitting on the laboratory furniture or equipment.

Service Strip: A rack or framework used to support the service line.

Service Tunnel or Service Chase: Area in back of or between the backs of base cabinets and under the working surface provided to allow room for several lines.

Service Turret: An enclosure that projects above the table top to provide room for the service line to be brought up through the table top or be connected to the service fittings that are mounted on the outside surface of the enclosure.

Service Umbilical: A fully enclosed chase containing service lines extending from the ceiling area above the laboratory bench into the service tunnel of the same laboratory bench.

Sink Outlet: A flanged fitting that is recessed and sealed into the sink bottom to provide means of connecting sink to drainage system.

Tail Piece: The connecting fitting used to connect the sink outlet to the trap or drain line. Tail piece may be an integral part of the sink outlet or a separate piece.

2.0 F.O.B. Origin

2.1. General Requirements

Laboratory furniture and equipment covered by this specification and accompanying drawings shall be supplied under the direction of one Laboratory Furniture and Equipment Contractor to eliminate any divided responsibility, unless specified to the contrary.

Bidders must be prepared to provide within 10 days before opening of bids the following proof of their ability to perform under this contact.
They have satisfied the project specifications for qualifications and experience (Usually three years experience and ten completed projects of comparable size and scope within the most recent three year period.)

Financial and technical resources of sufficient scope to assure prompt and satisfactory performance in the production and delivery of equipment specified so as not to delay the program of the work. Failure to meet any of these requirements and qualifications may be sufficient cause for the rejection of any or all bids, and to award the contract to other than the lowest bidder, if in the specifiers opinion, such action would insure better performance and a higher level of quality and value.

2.2 Standard Of Quality

It is the prime intent of this specification and applicable drawings to show and define the essential minimum requirements as to the quality of materials, construction, finish and overall workmanship. Furniture and/or equipment differing from that specified will not be considered unless ample proof is submitted with the proposal in the form of complete drawings and samples indicating all essential requirements of this specification are adhered to. The owner, or their designated representative, reserves the right to reject any quotation offering equipment which in his considered opinion does not meet the standard of quality established by the specification.

2.3 Conditions Of Purchase

F.O.B. origin, freight prepaid and added to invoice. The laboratory Furniture and Equipment Contractor shall prepay freight cost and include it as a separate invoice item. Customer accepts title and equipment at F.O.B point loaded onboard transportation vehicle. Customer is responsible for filing and collecting freight claims.

2.4 Equipment and Service Fixtures Supplied By Laboratory Furniture and Equipment Contractor

2.4.1 Furnish all laboratory furniture and equipment, tops, ledges and supporting structures, fume hoods, vented enclosures or vented devices and miscellaneous items of equipment as listed in this specification or equipment schedules or as specifically noted on drawings. Furnish all filler panels, knee space panels where specified, and scribes as shown. Laboratory furniture and equipment to be furnished as designed and properly marked for installation on job site by appropriate trades.

2.4.2 Furnish, packed in boxes for installation by trade contractor, laboratory sinks, drains, drain troughs, overflows, and sink outlets. These shall be furnished unassembled in properly marked cartons and turned over to the proper trade at the tailgate or single location designated by the Laboratory Furniture and Equipment Contractor. Traps, tailpieces and special coupling devices shall be provided by others.

2.4.3 Furnish, packed in boxes for installation by trade contractor, faucets and plumbing service supply fixtures to attach to the furniture or equipment as called for in the specifications, equipment list or shown on drawings, complete with tank nipples and lock nuts for mounting fixtures on tops or curbs. These shall be furnished unassembled in properly marked cartons and turned over to the proper trade at the tailgate or at a single location designated by the Laboratory Furniture and Equipment Contractor, for distribution, mounting and connection by the plumber. Integral vacuum breakers shall be furnished only as called for in the specifications and where these are part of the equipment

as listed in the specifications, equipment schedule or shown on drawings.

2.4.4 Furnish electrical service fixtures directly attached to the casework or equipment as called for in the specifications, equipment list and/or shown on drawings. Fixtures shall be furnished unassembled, in cartons, properly marked and

© SEFA - 5th Edition Desk Reference - Version 3.0

shall be turned over to the electrician at the tailgate of the transportation vehicle or at a single location designated by the Laboratory Furniture and Equipment Contractor for distribution, mounting, and connection by the electrician.

2.5.5 Furnish service strip supports, service tunnels, service turrets, supporting structures and reagent racks of type shown on details or specified. Furnish pipe supports as specified as shown on architectural drawings located to no more than for feet (4') between centers. Furnish service lines in reagent racks only when such service lines are specifically noted as part of the specification.

2.5.6 Furnish fume hood blowers only when specifically listed in this section of the specification, equipment schedule or drawings.

2.4.7 Furnish additional cabinet hardware accessories such as locks, label holders, base molding, etc., only when specifically called out to be furnished in this section of the specifications.

2.4.8 The manufacture of furniture or equipment shall be based upon field checked drawings under Section 2.6 Drawings.

2.4.9 Furniture and equipment shall be loaded under the direction of the Laboratory Furniture and Equipment Contractor's manufacturing plant into trucks which normally transport this type of equipment. Full truckload lots of furniture and equipment shall be packed, appropriately protected and shipped in a van and/or stipulated transportation. Less than truckload lots shall be crated, boxed or packed separately for protection, handling and minimum freight rates.

2.4.10 The Laboratory Furniture and Equipment Contractor will not assume responsibility for any aspect of the installation.

2.4.11 Glossary of Terms of SEFA are incorporated herein for reference.

2.4.12 Special Note to Other Sections:

It shall be the responsibility of the specifier to define the work indicated under preceding paragraphs 2.4.1 through 2.4.11, as all inclusive and representing the total obligation of the Laboratory Furniture and Equipment Contractor, and to make such reference in the General Conditions and in the Scope of Work applicable to all other sections.

2.5 Equipment, Security and Work "By Others" Shall Include But Not Be Limited To:

2.5.1 Providing all framing and reinforcement to walls, floors, and ceilings necessary to adequately support the equipment, and all bucks and plaster grounds required for proper and safe installation of equipment.

2.5.2 Furnishing and installation of rough-in to point stipulated in LFE supplier drawings of all service lines, drain lines, piping, system backflow prevention, vents, revents, steam fittings and special plumbing fixtures or piping to meet local codes even though not specifically called for in Laboratory and Furniture and Equipment Contractor's specifications and/or shown on drawings.

2.5.3 Furnishing, installing and connecting of all duct work from fume hoods, vented enclosures and vented devices to blowers and from blowers to final point of discharge to atmosphere.

2.5.4 Hoisting or elevator service at no charge to Laboratory Furniture and Equipment Contractor.

2.5.5 Furnishing fluorescent tubes, light bulbs, and any miscellaneous materials generally classified as maintenance or supply items.

2.5.6 Providing protection and security during and after laboratory furniture and equipment installation.

2.5.7 Receiving, distributing, unpacking, inventorying and installing all laboratory furniture and equipment tops, ledges and supporting structures, fume hoods, vented enclosures or vented devices and miscellaneous items of equipment as listed in this specification, or equipment as listed in this specification, or equipment schedules or as specifically noted on drawings including all filler panels, knee

space panels where specified, and scribes as shown on Laboratory Furniture and Equipment shop drawings in accordance with SEFA 2-2010, manufacturer's installation instructions and local codes and regulations. Provide dumpster and/or other waste disposal at no cost to Laboratory Furniture and Equipment Contractor.

2.5.8 Receiving, distributing, unpacking, inventorying, installing and connecting, ready for use, all laboratory sinks, drains, drain troughs, overflows, and sink outlets. Supply and install all traps, tail pieces and any special coupling devices.

2.5.9 Receiving, distributing, unpacking, inventorying, installing and connecting, ready for use, all faucets and plumbing service supply fixtures attached to the furniture or equipment as called for in the specifications, equipment list or shown on drawings.

2.5.10 Receiving, distributing, unpacking, inventorying, installing and connecting, ready for use, all electrical service fixtures and devices.

2.6 Drawings

The Laboratory Furniture and Equipment Contractor shall furnish the customer with three sets of shop drawings, which will cover all items described in the furniture and equipment schedule and/or as shown on the drawings. In addition, he shall supply, without charge, one set of as-built drawings.

The Laboratory Furniture and Equipment Contractor shall furnish the customer with three sets of rough-in drawings detailing the locations of sinks and sink outlets, gas valves, chases, service lines, drain lines, piping, system vacuum breakers and conduit.

Additional prints required shall be furnished at a nominal charge to the owner.

The customer shall furnish the LaboratoryFurniture and Equipment Contractor verified building measurements, at the time of order or at the time specified by the Lab Furniture and Equipment Contractor, as they exist to insure the proper fitting of all items of equipment furnished by the contractor.

2.7 Samples

When requested by the customer, samples as specified shall be submitted and approval before proceeding with any of the work. Product samples will be the basis of evaluation and any samples which do not meet the quality standards of the architect's specifications shall constitute a basis of rejection of the quotation. Samples shall clearly show the following:

1. Top Construction
2. Drawer Construction
3. Corner and Leg Construction
4. Cabinet Construction
5. Door Construction
6. Finish
7. Hardware
8. Service Fixtures
9. Sink Construction

Samples shall be held by the customer for the duration of the project as a means for comparison of products supplied. Customer shall furnish contractor with written sample approval.

2.8 Inspection

Furniture and equipment may be inspected by the customer at the Laboratory Furniture and Equipment Contractor's manufacturing plant at the customer's expense prior to shipment. Any equipment found not to be in accordance with the project documents, approved shop drawings and approved samples may be rejected. All rejected furniture and equipment must be promptly replaced or modified at no cost to the customer.

3.0 Delivered and Installed

3.1 General Requirements

Laboratory furniture and equipment covered by this specification and accompanying drawing shall be supplied under the direction of one Laboratory Furniture and Equipment Contractor to eliminate any divided responsibility, unless specified to the contrary.

Bidders much be prepared to provide within 10

© SEFA - 5th Edition Desk Reference - Version 3.0

days before opening of bids, the following proof of their ability to perform under this contract.

1. They have satisfied the project specifications for qualifications and experience. (Usually three years experience and ten completed projects of comparable size and scope within the most recent three year period.)

2. Financial and technical resources of sufficient scope to assure prompt and satisfactory performance in the production and delivery of equipment specified so as not to delay the progress of work.

Failure to meet any of these requirements and qualifications may be sufficient cause for the rejection of any or all bids, and to award contract to other than the lowest bidder if in the specifier's opinion, such action would insure better performance and a higher level of quality and value.

3.2 Standard of Quality

It is the prime intent of this specification and applicable drawings to show and define the essential minimum requirements as to the quality of materials, construction, finish and overall workmanship. Furniture and/or equipment different from that specified will not be considered unless ample proof is submitted with the proposal in the form of completed drawings and samples indicating all essential requirements of the specification are adhered to. The owner, or their designated representative, reserves the right to reject any quotation offering equipment which in his considered opinion does not meet the standard of quality established by this specification.

3.3 Conditions of Purchase

The Laboratory Furniture and Equipment Contractor shall be fully responsible for shipping and shall bear shipping expense, retain title during transit and file freight damage claims as necessary. Title transfers to the buyer upon substantial completion.

3.4 Equipment and Service Fixtures Supplied By Laboratory Furniture and Equipment Contractor

3.4.1 Furnish, deliver and install all laboratory furniture and equipment, tops, ledges and supporting structures, fume hoods, vented enclosures or vented devices and miscellaneous items of equipment as listed in this specification, or equipment schedules or as specifically noted on the drawings. Furnish all filler panels, knee space panels where specified, and scribes as shown. Laboratory furniture and equipment to be furnished as designed and properly marked for installation on job site by Laboratory Furniture and Equipment Contractor.

3.4.2 Furnish and deliver, packed in boxes for installation by trade contractor, laboratory sinks, drains, troughs, overflows, and sink outlets. These shall be furnished unassembled in properly marked cartons and turned over to the proper trade at the tailgate or a single location designated by the Lab Furniture and Equipment Contractor. Traps, tail pieces and special coupling devices shall be provided by others.

3.4.3 Furnish and deliver to respective trades' care and custody, packed in boxes for installation by trade contractor, faucets and plumbing services supply fixtures attached to the furniture or equipment as called for in the specifications, equipment list or shown on drawings, complete with tank nipples and lock nuts for mounting on tops or curbs. These shall be furnished unassembled in properly marked cartons and turned over to the proper trade at the tailgate or at a single location designated by the Laboratory Furniture and Equipment Contractor, for distribution mounting and connection by the plumber. Internal vacuum breakers shall be furnished only as called for in the specifications and where these are part of the equipment as listed in the specifications, equipment schedule or shown on drawings.

3.4.4 Furnish and deliver electrical service fixtures directly attached to the casework or equipment as called for in the specifications, equipment list and/or shown on drawings. Fixtures shall be furnished unassembled in

cartons, properly marked and shall be turned over to the electrician at the tailgate of the transportation vehicle or at a single location designated by the Laboratory Furniture and Equipment Contractor for distribution, mounting and connection by the electrician.

3.4.5 Furnish and deliver service strip supports, service tunnels, service turrets, supporting structures and reagent racks of type shown on details or specified. Furnish pipe supports as specified as shown on architectural drawings located no more than four feet (4') between centers. Furnish service lines in reagent racks only when such service lines are specifically noted as part of this section of specifications.

3.4.6 Furnish and deliver fume hood blowers only when specifically listed in this section of the specifications, equipment schedule or drawings.

3.4.7 Furnish additional cabinet hardware accessories such as locks, label holders, base molding, etc. only when specifically called out to be furnished in this section of the specifications.

3.4.8 The manufacture of furniture or equipment shall be based upon field checked drawings under Section 3.6 Drawings.

3.4.9 Furniture and equipment shall be loaded under the direction of the Laboratory Furniture and Equipment Contractor's plant into trucks, which normally transport this type of equipment. Full truckload lots of furniture and equipment shall be packed, appropriately protected and shipped in a van and/or stipulated transportation. Less than truck load lots shall be crated, boxed or packaged separately for protection, handling and minimum freight rates.

3.4.10 The Laboratory Furniture and Equipment Contractor assumes responsibility for installation, which shall be performed in accordance with SEFA 2-2010.

3.4.11 SEFA 4-2010 Glossary of Terms is incorporated herein by reference.

3.4.12 Special Note to Other Sections:

It shall be the responsibility of the specifier to define the work indicated under preceding paragraphs 3.4.1 through 3.4.11 as all inclusive and representing the total obligation of the laboratory furniture and equipment contractor, and to make such reference in the General Conditions and in the Scope of Work Applicable to all other sections.

3.5 Equipment, Security and Work "By Others" Shall Include But Not be Limited To

3.5.1 Providing all framing and reinforcement to walls, floors and ceiling necessary to adequately support the equipment, and all bucks and plaster ground required for proper and safe installation of equipment.

3.5.2 Furnishing and installing of rough-in to point stipulated in LFE supplier drawings of all service lines, drain lines, piping, system backflow prevention, conduit and wiring including GFI protection, vents, revents, steam fittings and special plumbing fixtures or piping to meet local codes even though not specifically called for in Laboratory Furniture and Contractor's specifications and/or shown on drawings.

3.5.3 Furnishing, installing and connecting of all duct work from fume hoods, vented enclosures and vented devices to blowers and from blowers to final point of discharge to atmosphere. Blowers, when so specified to be furnished by Laboratory Furniture and Equipment Contractor, shall be handled and/or installed by others.

3.5.4 Hoisting or elevator service at no charge to Laboratory Furniture and Equipment Contractor.

3.5.5 Furnishing fluorescent tubes, light bulbs and any miscellaneous materials generally classified as maintenance or supply items.

3.5.6 Providing protection and security during and after laboratory furniture and equipment installation.

3.5.7 Providing dumpster and/or other waste disposal at no cost to the Laboratory and Equipment Contractor.

© SEFA - 5th Edition Desk Reference - Version 3.0

3.5.8 Receiving, distributing, unpacking, inventorying, installing and connecting ready for use all laboratory sinks, drains, drain troughs, overflows, and sink outlets. Supply and install all traps, tailpieces and any special coupling devices.

3.5.9 Receiving, distributing, unpacking, inventorying, installing and connecting ready for use all faucets and plumbing service supply fixtures attached to the furniture or equipment as called for in the specifications, equipment list or shown on drawings.

3.5.10 Receiving, distributing, unpacking, inventorying, installing and connecting ready for use all electrical service fixtures and devices.

3.6 Drawings

The Laboratory Furniture and Equipment Contractor shall furnish the customer with three sets of shop drawings, which will cover all items described in the furniture and equipment schedule and/or as shown on the drawings. In addition, he shall supply, without charge, one set of as-built drawings.

The Laboratory Furniture and Equipment Contractor shall furnish the customer with three sets of rough-in drawings detailing the locations of sinks and sink outlets, gas valves, chases, service lines, drain lines, piping , system vacuum breakers and
conduit.

3.7 Samples

When requested by the customer, samples as specified shall be submitted and approved before proceeding with any of the work. Product samples will be the basis of evaluation and any samples which do not meet the quality standards of the architect's specifications shall constitute a basis of rejection of the quotation. Sample shall clearly show the following:

1. Top Construction
2. Drawer Construction
3. Corner and Leg Construction
4. Cabinet Construction
5. Door Construction
6. Finish
7. Hardware
8. Service Fixtures
9. Sink Construction

The customer shall furnish the contractor with written sample approvals.

3.8 Inspection

Furniture and equipment may be inspected by the customer at the Laboratory Furniture and Equipment Contractor's manufacturing plant and the customer's experience prior to shipment. Any equipment found not to be in accordance with the project documents, approved shop drawings, and approved samples may be rejected. All rejected furniture and equipment must be promptly replaced or modified at no cost to the customer.

4.0 Delivered, Installed and Connected

4.1 General Requirements

Laboratory furniture and equipment covered by this specification and accompanying drawings shall be supplied under the direction of one Laboratory Furniture and Equipment Contractor to eliminate any divided responsibility, unless specified to the contrary.

Bidders must be prepared to provide within 10 days before opening of bids the following proof of their ability to perform under this contract:

They have satisfied the project specifications for qualifications and experience (Usually three years experience and ten completed projects of comparable size and scope within the most recent three year period.) sufficient scope to assure prompt and satisfactory performance in the production and delivery of equipment specified so as not to delay the progress of the work.

Failure to meet any of the requirements and qualifications may be sufficient cause for the rejection of any or all bids, and to award contract to someone other than the lowest bidder if, in the opinion of the specifier, such action would insure better performance and a high level of quality and value.

4.2 Standard of Quality

It is the prime intent of this specification and applicable drawings to show and define the essential minimum requirements as to the quality of materials, construction, finish **and** overall workmanship. Furniture and/or equipment differing from that specified will not be considered unless ample proof is submitted with the proposal in the form of complete drawings and samples indicating all essential requirements of the specifications are adhered to. The owner, or their designated representative, reserves the right to reject any quotation offering equipment which in his considered opinion does not meet the standard of quality established by the specifications**.**

4.3 Conditions of Purchase

The Laboratory Furniture and Equipment Contractor shall be fully responsible for shipping and shall bear shipping expense, retain title during transit, and file freight damage claims as necessary. Title transfers to the buyer upon substantial completion

4.4 Equipment and Service Fixtures Supplied By the Laboratory Furniture and Equipment Contractor Shall Include:

4.4.1 Furnish, deliver and install all laboratory furniture and equipment, tops, ledges and supporting structures, fume hoods, vented enclosures or vented devices and miscellaneous items or equipment as listed in this specification, or equipment schedules or as specifically noted on drawings. Furnish all filler panels, knee space panels where specified, and scribes as shown. Laboratory furniture and equipment to be furnished as designed and properly marked for installation on job site by Laboratory Furniture and Equipment Contractor.

4.4.2 Furnish, deliver and install laboratory sinks, drains, drain troughs, overflows, and sink outlets. Traps, tailpieces and special coupling devices shall be provided by others.

4.4.3 Furnish, deliver and install faucets and plumbing service supply fixtures attached to the furniture or equipment as called for in the specifications, equipment list or shown on drawings, complete with tank nipples and lock nuts for mounting fixtures on tops or curbs. Integral vacuum breakers shall be furnished only as called for in the specification and where these are part of the equipment as listed in the specifications, equipment schedule or shown on drawings.

4.4.4 Furnish and deliver electrical fixtures directly attached to the casework or equipment as called for in the specifications, equipment list and/or shown on drawings. Devices shall be furnished unassembled, in cartons, properly marked and shall be turned over to the electrician at the tailgate of the transportation vehicle or at a single location designated by the Laboratory Furniture and Equipment Contractor for distribution, mounting, and connection by the electrician. Service boxes, pedestals shall be mounted in place ready for attachment of conduit.

4.4.5 Furnish, deliver and install service strip supports, service tunnels, service turrets, supporting structures and reagent racks of type shown on details or specified. Furnish pipe supports as specified and as shown on architectural drawings located no more than four feet (4') between centers. Furnish service lines in reagent rack only when such service lines are specifically noted as part of this section of specifications.

4.4.6 Furnish and deliver fume hood blowers only when specifically listed in this section of the specification, equipment schedule or drawings.

4.4.7 Furnish additional cabinet hardware accessories such as locks, label holders, base molding ,etc., only when specifically called out to be furnished in this area of the specifications.

4.4.8 The manufacture of furniture or equipment shall be based upon field checked drawings under section 4.6 Drawings.

4.4.9 Furniture and equipment shall be loaded under the direction of the Laboratory Furniture and Equipment Contractor's manufacturing plant into trucks which normally transports this type of equipment. Full truckload lots of furniture

© SEFA - 5th Edition Desk Reference - Version 3.0

and equipment shall be packed, appropriately protected and shipped in a van and/or stipulated transportation. Less than truckload lots shall be crated, boxed or packaged separately for protection, handling and minimum freight rates.

4.4.10 Glossary of terms of SEFA are incorporated herein by reference.

4.4.11 Special Note to Other Sections.

It shall be the responsibility of the Specifier to define the work indicated under preceding paragraphs of this section as all inclusive and representing the total obligation of the Laboratory Furniture and Equipment Contractor, and to make such reference in the General Conditions and in the Scope of Work applicable to all other sections.

4.5 Equipment, Security And Work "By Others" Shall Include But Not Be Limited To:

4.5.1 Providing all framing and reinforcement to walls, floors, and ceilings necessary to adequately support the equipment , and all bucks and plaster grounds required for proper and safe installation. Furnishing and installation of rough-in to point stipulated in LFE supplier drawings of all service lines, drain lines, piping, system backflow prevention, conduit and wiring including system GFI protection, vents, revents, steam fittings and special plumbing fixtures or piping to meet local codes, even thought not specifically called for in Laboratory Furniture and Equipment Contractor's specifications and/or shown on drawings.

4.5.2 Furnishing, installing and connection of all duct work from fume hoods, vented enclosures and vented devise to blowers and from blowers to atmosphere. Blowers when so specified to be furnished by Laboratory Furniture and Equipment Contractor, shall be handled and/or installed by others.

4.5.3 Hoisting or elevator service at no charge to Laboratory Furniture and Equipment Contractor.

4.5.4 Furnishing fluorescent tubes, light bulbs, and any miscellaneous material generally classified as maintenance or supply items.

4.5.5 Providing protection and security during and after laboratory furniture and equipment installation.

4.5.6 Providing dumpster and/or other waste disposal at no cost to Laboratory Furniture and Equipment Contractor.

4.5.6 Connecting ready for use all laboratory sinks, drains, drain troughs, overflows, sink outlets. Supply and install all traps, tailpieces and any special coupling devices.

4.5.7 Connecting ready for use all faucets and pluming service supply fixtures attached to furniture or equipment as called for in the specifications, equipment list or shown on drawings.

4.5.8 Receiving and installing electrical devices and connecting, ready for use, all electrical service fixtures and devices.

4.6 Drawings

The Laboratory Furniture and Equipment Contractor shall furnish the customer with three sets of shop drawings, which will cover all items described in the equipment schedule and/ or as shown on the drawings. In addition, he shall supply, without charge, one set of as-built drawings.

The Laboratory Furniture and Equipment Contract shall furnish the Customer with three sets of rough-in drawings detailing the location of sinks and sink outlets, gas valves, chases, service lines, drain lines, piping, systems vacuum breakers and conduit.

Additional prints required shall be furnished as a nominal charge to the Owner.

The Customer shall furnish the Laboratory Furniture and Equipment Contractor verified building measurements, at time of order or at time specified by the Laboratory Furniture and Equipment Contractor, as they exist to insure the proper fitting of all items of equipment furnished by the Contractor.

4.7 Samples

When requested by the Customer, samples as specified shall be submitted and approved before proceeding with any of the work. Product samples will be the basis of evaluation and any samples which do not meet the quality standards of the architect's specifications shall constitute a basis of rejection of the quotation. Sample shall clearly show the following:

(1) Top Construction
(2) Drawer Construction
(3) Corner and Leg Construction
(4) Cabinet Construction
(5) Door Construction
(6) Finish
(7) Hardware
(8) Service Fixtures
(9) Sink Construction

Samples shall be held by the Customer for the duration of the project as a means for comparison of products supplied.

The Customer shall furnish the Contractor with written sample approval.

4.8 Inspection

Furniture and equipment may be inspected by the Customer at the Laboratory Furniture and Equipment Contractor's manufacturing plant at the Customer's expense prior to shipment. Any equipment found not to be in accordance with the project documents, approved shop drawings, and approved samples may be rejected. All rejected furniture and equipment must be promptly replaced or modified at no cost to the Customer.

© SEFA - 5th Edition Desk Reference - Version 3.0

Scientific Equipment & Furniture Association
Recommended Practices

SEFA 7-2020
Laboratory Fixtures

SEFA World Headquarters
65 Hilton Avenue
Garden City, NY 11530

Tel: 516-294-5424
www.sefalabs.com

SEFA SPELLS SAFE

Table of Contents

		Page
Committee Members		**231**
Foreword		**232**
Sections		
1.0	**Scope**	**233**
2.0	**Purpose**	**233**
3.0	**References**	**233**
4.0	**Definitions**	**234**
5.0	**Materials and Finishes**	**237**
5.1	**Materials Used in Laboratory Fittings**	
5.2	**Finishes for Laboratory Service Fixtures and Safety Equipment**	
5.2.1	Finish Types	
5.2.2	Chrome Plated Finishes	
5.2.2.1	Description of Chrome Plated Finishes	
5.2.2.2	Performance Tests for Chrome Plated Finishes.	
5.2.3	Corrosion Resistant Finishes	
5.2.3.1	Description of Corrosion Resistant Finishes	
5.2.3.2	Performance Tests for Corrosion Resistant Finishes.	
6.0	**Color Coding**	**240**
7.0	**General Requirements for Laboratory Service Fittings**	**240**
7.1	**Workmanship**	
7.2	**Handling**	
7.3	**Installation**	
7.3.1	Fitting Design	
7.3.2	Field Installation	
7.4	**Threads and other Connections**	
7.4.1	Pipe Threads	
7.4.2	Inlets for Sink Fittings	
7.4.3	Solder Connections	
7.5	**Marking**	
7.5.1	Product Marking	
7.5.2	Packaging	
8.0	**Water Faucets and Fittings**	**242**
8.1	**General Requirements**	
8.1.1	Working Pressures	
8.1.2	Working Temperatures	
8.2	**Valve Construction**	
8.3	**Goosenecks, Spouts and Outlet Fittings**	
8.3.1	General Construction	
8.3.2	Packings	
8.3.3	Outlets	
8.4	**Testing**	
8.4.1	Strength Tests	
8.4.1.1	Burst Strength Test	
8.4.1.2	Bending Loads on Fittings	
8.4.1.3	Spout Strength Test	
8.4.2	Handle Security Test	
8.4.3	Valve Operating Test	
8.4.4	Life Tests	
8.4.4.1	Life Tests for Valves	
8.4.4.2	Life Test for Goosenecks and Spouts	
8.4.5	High Temperature Extreme Test.	
8.4.6	Intermittent Shock Test	
9.0	**Fittings for Natural Gas, Air, Vacuum, Special Gases and Steam Services**	**245**
9.1	**Valve Types, Applications**	
9.1.1	Ground Key Cock Valves	
9.1.2	Laboratory Ball Valves	

Table of Contents (cont'd)

Page

9.1.3 Needle Valves
9.1.4 Steam Valve

9.2 Valves for Burning Gases
9.2.1 Valve
9.2.2 Certification

9.3 Mounting Fittings

9.4 Valves and Pressure Regulators for High Purity Gases
9.4.1 General
9.4.2 Valves and Pressure Regulators for 5.0 Gases
9.4.3 Valves and Pressure Regulators for 6.0 Gases

10.0 Valves and Outlets for Use in Fume Hoods 246

10.1 Valve Types
10.1.1 Rod-Type Valves
10.1.2 Panel Mounted Valves

10.2 Valve Construction

10.3 Outlet Fittings
10.3.1 General Construction
10.3.2 Corrosion Resistance
10.3.3 Color Coding

10.4 Vacuum Breakers for Use on Fume Hoods

10.5 Installation

Page

11.0 Faucets for Purified Water 247

11.1 General

11.2 Fitting Materials and Construction

12.0 Backflow Prevention 248

12.1 General

13.0 Fittings for ADA Compliance 249

14.0 Vandal-Resistant Fittings

14.1 Resistance to Physical Abuse

14.2 Protection of Supply Lines

14.3 Maintenance

15.0 Electrical Fittings 249

16.0 Emergency Eye Wash and Shower Equipment 249

16.1 General Requirements

16.2 Materials and Finishes

Appendix 250

© SEFA - 5th Edition Desk Reference - Version 3.0

SEFA 7 Laboratory Fixtures Committee Members

Chair

Mike Straughn - Water Saver Faucet

Air Master Systems

BROEN-LAB

Carlos Arboles

Chang Consulting

Flad Architects

GCE Gas Control Systems

HOK

Jacobs

Kewaunee Scientific

Labconco Corporation

Lab Crafters

Nuova Far

PG LifeLink

RFD

Smith Group

Vacuubrand

Withee Works

Woods Bagot

Foreword

SEFA Profile

The Scientific Equipment and Furniture Association (SEFA) is an international trade association comprised of manufacturers of laboratory furniture, casework, fume hoods and members of the design and installation professions. The Association was founded to promote this rapidly expanding industry and improve the quality, safety and timely completion of laboratory facilities in accordance with customer requirements.

SEFA Recommended Practices

SEFA and its committees are active in the development and promotion of Recommended Practices having domestic and international applications. Recommended Practices are developed by the association taking into account the work of other standard-writing organizations. Liaison is also maintained with government agencies in the development of their specifications.

SEFA's Recommended Practices are developed in and for the public interest. These practices are designed to promote a better understanding between designers, architects, manufacturers, purchasers, and end-users and to assist the purchaser in selecting and specifying the proper product to meet the user's particular needs. SEFA's Recommended Practices are periodically updated. The Recommended Practices are numbered to include an annual suffix which reflects the year that they were updated. SEFA encourages architects to specify these Recommended Practices as follows: "SEFA 7-2020".

SEFA Glossary of Terms

SEFA has developed a Glossary of Terms (SEFA 4-2020) for the purpose of promoting a greater understanding between designers, architects, manufacturers, purchasers and end users. The terms defined by SEFA are frequently used in contracts and other documents, which attempt to define the products to be furnished or the work involved. The Association has approved this Glossary in an effort to provide uniformity among those who use these terms. Where a specific Recommended Practice contains definitions which differ from those in the Glossary of Terms, then the definitions in the specific Recommended Practice should be used.

SEFA encourages all interested parties to submit additional terms or to suggest any changes to those terms already defined by the Association. The definitions should be used to help resolve any disputes that may arise or to incorporate the applicable terms in any contract or related documents.

SEFA Disclaimer

SEFA uses its best effort to promulgate Recommended Practices for the benefit of the public in light of available information and accepted industry practices. SEFA does not guarantee, certify, or assure the safety or performance of any products, components, or systems tested, installed, or operated in accordance with SEFA Recommended Practices or that any tests conducted under its Recommended Practices will be non-hazardous or free from risk. SEFA encourages the use of third party independent testing where appropriate.

Note : ***Testing as described in this document must be performed and documented by a SEFA-approved third party testing facility. See Page 36 of the SEFA Desk Reference 5th Edition Version 3.0, or visit us at SEFALABS.COM for the most current list of SEFA-approved test labs.***

© SEFA - 5th Edition Desk Reference - Version 3.0

1.0 Scope

These Recommended Practices apply to (i) laboratory service fittings and fixtures, including faucets, valves and related products, and (ii) safety equipment, consisting of emergency eye washes, emergency showers and related products.

2.0 Purpose

SEFA has developed and made available these Recommended Practices as a guide for regulatory agencies, architects, engineers, consultants, specification writers, contractors, manufacturers and dealers of laboratory furniture, installers, facilities managers and users who specify, recommend for purchase, install and/or use laboratory service fittings and safety equipment. It is intended to provide the laboratory community with the most suitable products for dependable performance and safe sanitary installations. Specific construction features of the products covered by these Recommended Practices have not been considered.

3.0 References

"Plumbing Fixture Fittings", ASME A112.18.1-2005

"Standard Specification for Copper Alloys in Ingot Form", ASTM B30-04

"Standard Specification for Copper and Copper Alloy Forging Rod, Bar, and Shapes", ASTM B124 / B124M-04

"Standard Specification for Seamless Brass Tube", ASTM B135-02

"Standard Specification for Seamless Red Brass Pipe, Standard Sizes", ASTM B43-98 (2004)

"Standard Specification for Free-Cutting Brass Rod, Bar and Shapes for Use in Screw Machines", ASTM B16 / B16M-05

"Standard Specification for Seamless Copper Water Tube", ASTM B88-03

"Standard Specification for Aluminum and Aluminum-Alloy Bar, Rod, and Wire", ASTM B211-03

"Standard Specification for Aluminum-Alloy Sand Castings", ASTM B26 / B26M-03

"Standard Specification for Electrodeposited Coatings of Copper Plus Nickel Plus Chromium and Nickel Plus Chromium", ASTM B456-03

"Standard Specification for Qualitative Adhesion Testing of Metallic Coatings", ASTM B571-97 (2003)

"Standard Test Method for Chipping Resistance of Coatings", ASTM D3170-03

"Standard Test Method for Mandrel Bend Test of Attached Organic Coatings", ASTM D522-93a (2001)

"Standard Test Methods for Measuring Adhesion by Tape Test", ASTM D3359-02

"Standard Test Method for Effect of Household Chemicals on Clear and Pigmented Organic Finishes", ASTM D1308-02

"Standard Guide for Testing Coating Powders and Powder Coatings", ASTM D3451-01

"Standard Specification for Polypropylene Injection and Extrusion Materials", ASTM D4101

"Manually Operated Gas Valves for Appliances, Appliance Connector Valves and Hose End Valves", ANSI Z21.15-1997 / CGA 9.1-M97

"Performance Requirements for Atmospheric Type Vacuum Breakers", ASSE 1001-2002

"Performance Requirements for Laboratory Faucet Backflow Preventers", ASSE 1035-2002

Powder Coating – The Complete Finisher's Handbook, The Powder Coating Institute – 1999

"Uniform Plumbing Code", IAPMO/ANSI UPC 1-2003

4. 0 Definitions

Accessory - A component that can, at the discretion of the user, be readily added, removed, or replaced, and that, when removed, will not prevent the fitting from fulfilling its primary function. Includes outlet fittings such as serrated hose ends, aerators and aspirators.

Air Gap - The unobstructed vertical distance through the free atmosphere between the lowest opening from any pipe or faucet supplying water to a tank, plumbing fixture or other device and the mounting surface of the fitting.

Aerator - A type of outlet fitting that is designed to deliver a mixture of air and water. An aerator may incorporate an internal flow control to deliver water at a specific rate (usually specified in gallons or liters per minute).

Angle Pattern Valve - A valve that has its inlet port and outlet port at 90° to each other, with the operating stem at 180° to the inlet port.

Aspirator - A type of outlet fitting that, when water is passed through it, develops a vacuum through a side port. Also referred to as a "filter pump".

Atmospheric Vacuum Breaker - A device containing a float check, a check seat and an air inlet port. The flow of water into the body causes the float to close against the air inlet port. When the flow of water stops, the float falls and forms a check valve against back siphonage and at the same time opens the air inlet port to allow air to enter and relieve the vacuum.

Ball Valve - A type of valve used for controlling water or gases. The valve operates by means of a spherical "ball" that is positioned between two seals that are within a body housing and press against the ball to form a watertight or gastight seal. Rotation of the ball 90 degrees opens and closes the valve.

Celcon® - An acetyl copolymer.

Check Valve - A valve that permits flow in one direction only. The valve is designed to close automatically to retard or obstruct the flow in a reverse direction.

Cold Water - For test purposes, water at a temperature of 40°F to 70°F (5°C to 21°C)

Combination Fitting or Faucet - A supply fitting with more than one supply inlet delivering a mixture of hot and cold water through a single spout. May also be referred to as a "mixing faucet."

Critical Level - The level at which polluted water, entering through an outlet of the supply fitting, will flow back to the supply lines by gravity and/or any pressure below atmospheric in the supply line when the water control valve is wide or fully open.

Deck Mounted Fitting - A fitting that mounts on a horizontal surface.

Diaphragm or Bellows Valve - A type of valve that utilizes a diaphragm or bellows to separate the operating components of the valve (such as the valve stem and bonnet) from the areas through which the gas flows through the valve. The purpose of this type of valve is to prevent permeation of atmospheric impurities into the gas flowing through the valve. These valves are sometimes also referred to as "packless" valves.

Effective Waterway (Opening) - The minimum cross-sectional area at the point of water supply discharge, measured or expressed in terms of (i) the diameter of a circle, or (ii) if the opening is not circular, the diameter of a circle of equivalent cross-section area.

Fitting - A device designed to control and/or guide the flow of water, gases, vacuum or steam. Also referred to as a "service fitting".

Faucet - A device designed to control and/ or guide the flow of water. A faucet generally incorporates some type of gooseneck or spout.

Fixture - In the plumbing industry, a fixture refers to a sink or receptacle that receives water or water-borne wastes and discharges into a drainage system. However, in the laboratory field, the term "fixture" has been used to describe a fitting or service fitting. Also referred to as a

© SEFA - 5th Edition Desk Reference - Version 3.0

"laboratory fixture", "service fixture" or "laboratory service fixture."

Flange - A type of mounting fitting generally used to hold a valve perpendicular to a wall or other vertical surface. May also be referred to as a "panel flange."

Flood Level Rim - The top edge of a receptor over which water would overflow.

Foot Operated Valve - A valve for water service that is operated by the user's foot. The valve may be either single or mixing and may be mounted on the floor, a ledge or a wall. Also referred to as a "pedal valve."

Front Loaded Remote Control Valve - A valve for use on a fume hood that is installed on the front face or post of the fume hood. The valve is usually designed so that the working components of the valve are accessible from the front exterior face of the hood. Also referred to as a "panel mounted remote control valve."

Fuel Gas - A gas that can be burned to supply heat. In laboratory applications, fuel gas generally refers to natural gas.

Gas - In laboratory applications, may refer to either fuel gas or to other substances in a gaseous state, such as nitrogen, helium, argon and oxygen. These latter gases may also be referred to as "special gases" or "cylinder gases."

Gas Purity - The purity of a gas is a function of the quantity of impurities present in a sample of the gas. A gas that is 99.999% pure has .001% impurities in it. A gas that is 99.998% pure has .002% impurities in it.

Gas purity may also be designated by a two digit code. The first digit of the code represents the "number of nines" in the percentage value designating the purity of the gas and the second digit indicates the last decimal digit, if it is smaller than "nine". For example, a gas that is 99.999% pure is referred to as being a "5.0" gas. A gas that is 99.998% pure is referred to as being a "4.8" gas.

Ground Key Cock - A type of valve used for controlling low pressure gases. The valve operates by means of a tapered cylindrical plug that fits into a matching tapered bore in the valve body. The tapered plug is ground and lapped and held in the valve body under continuous pressure to form a gastight seal in the valve body. Rotation of the tapered plug 90 degrees opens and closes the valve.

Gooseneck - A component of a faucet, usually fabricated of pipe or tubing and usually in the shape of the letter U, whose function is to direct the flow of water into a sink or receptor. Goosenecks may be of the rigid, swing or convertible rigid/swing type and may incorporate a vacuum breaker.

High Purity Gases - Any gas that has a level of purity or chemical composition that is certified as high purity by the gas manufacturer. For purposes of these Recommended Practices, high purity gases are gases with a certified purity level of 5.0 or greater (see definition of "gas purity" above).

Index Button - An indicator fitted into the top surface of the handle of a fitting that serves to identify the media or service being supplied by the fitting. For standards for color coding and symbols of services, refer to Section 6.

Manifold - A pipe or tube on which multiple fittings or outlets are mounted in parallel, relatively close together. On a typical manifold, one end is connected to a supply and the other end is plugged.

Manual Control - A type of valve mechanism wherein, once the valve is opened, the valve remains open until it is manually closed. Also referred to as "compression control."

May - When used, indicates an alternate requirement or option.

Mixing Valve, Faucet or Fitting - A valve or faucet designed to mix hot and cold water by means of automatic or manual regulation.

Mixing Valve, Single Control - A fitting with a single handle or control that shall serve to turn water on and off, and to change volume and temperature by means of a single handle.

Monel - An alloy of approximately 67% nickel, 28% copper and 5% other elements that is made by direct reduction from ore in which the constituent metals occur in these proportions.

Mounting Fitting - A fitting used to install or mount a valve on a horizontal or vertical surface. Examples of mounting fittings include turret bases, panel flanges and wye fittings.

Mounting Shank - A threaded length of pipe used for securing a fitting to a horizontal or vertical surface and to supply water, gas or other media to the fitting. The pipe should be machined with a taper pipe thread to connect to the fitting, a straight pipe thread for a locknut and either a straight or taper pipe thread to connect to the supply line. The mounting shank should be supplied by the manufacturer with a locknut and lockwasher. Also referred to as a "supply nipple" or "tank nipple."

Needle Valve - A type of valve in which an orifice is opened or closed by means of a needle or cone that is moved into or withdrawn from it.

Nipple - A short piece of pipe that is threaded at both ends.

Outlet Fitting - An accessory that is installed in the outlet end of a fitting.

Pedestal - See Turret Base.

Polyethylene (PE) - A plastic polymer of ethylene.

Polypropylene (PP) - Any of various thermoplastic plastics that are polymers of propylene.

Polyvinyl Chloride (PVC) - A water insoluble, thermoplastic material derived by the polymerization of vinyl chloride.

Polyvinylidene Flouride (PVDF) - A fluoropolymer that is chemically resistant to most acids, bases and organic solvents.

Potable Water - Water that is satisfactory for drinking, culinary, and domestic purposes, and meets the requirements of the health authority having jurisdiction.

Pressure Gauge - An instrument that measures and indicates the pressure of a liquid or gas.

Pressure Regulator - A device that regulates the pressure of a liquid or gas that is delivered through it.

Push/Turn Valve - A type of valve that has a handle that locks in the closed position and must be pushed down to permit the handle to rotate to open the valve. The internal construction of the valve shall incorporate rotating ceramic discs or other type of valve mechanism suitable for the intended use. Push/turn valves are generally used for natural and other burning gases.

Quick Connect - A fitting consisting of a body and a plug that interlock together to form a watertight or gastight connection. The body and plug may each have an internal valve to shut off the supply line when the two components are disconnected. The body and plug may also be keyed to form a matched set. Also referred to as a "quick disconnect."

Remote Control Valve - A type of valve for use in a fume hood, where the handle of the valve is located on the outside of the hood (generally on the front face or post of the hood or underneath the hood). A remote control valve is usually connected to an outlet fitting that is installed within the interior of the fume hood. A remote control valve can be either a rod-type valve or a front loaded valve (see definitions).

Renewable Unit - A cartridge or unit that contains all of the working components of a valve and can be removed from the fitting body and replaced without disturbing the fitting body. Also referred to as a "replaceable unit."

Rod-Type Remote Control Valve - A type of remote control valve where the valve is mounted within the side wall or underneath the fume hood. The valve is fitted with an extension rod that projects from the valve through the face of the hood or through the apron underneath the hood and a handle is mounted on the end of the rod.

Seat - The surface around or within an orifice in a faucet or valve through which water or gas flows and against which a closing member, such as a

© SEFA - 5th Edition Desk Reference - Version 3.0

disc or washer, is pressed or seated to terminate the flow. Also referred to as a "valve seat." A "renewable seat" is a seat that is separate from the valve body and can be removed and replaced, either with or without a tool.

Seat Disc - A disc or washer that, when compressed against a seat, provides a watertight or gastight seal. Also referred to as a "valve disc" or "bib washer".

Self-Closing Control - A type of valve mechanism that closes automatically when the handle is released.

Serrated Hose End - An outlet fitting that has graduated serrations that will accommodate hose or tubing. Also referred to as a "serrated nozzle" or "serrated tip."

Service - The supplying of utilities such as water, air, gas, vacuum and steam as required in a laboratory. "Service" or "media" also refers to the specific liquid or gas that is delivered by a particular fitting.

Service Fitting - Any device that controls and/or guides the flow of a service in a laboratory.

Shall - Where used, indicates a mandatory requirement.

Single Valve, Faucet or Fitting - When used with reference to a water fitting, a fitting that delivers either cold, hot or tempered water only, without the capability of mixing the water.

Significant Surface - An exposed surface that, if marred, would detract from the appearance of the fitting.

Standard Tools - Tools, such as a screwdriver, key wrench, flat jawed wrench, strap wrench and pliers, which are normally carried by plumbers for the installation and maintenance of plumbing.

Straight Pattern Valve - A valve that has its inlet port and outlet port at 180° to each other, with the operating stem at 90° to the inlet port.

Turret or Turret Base - A type of mounting fitting, usually cylindrical in shape, used to install one or more fittings on a horizontal or vertical surface. The fittings are held parallel to the surface on which the turret base is installed.

Vacuum Breaker - A device to prevent the creation or formation of a vacuum in a piping system by admitting air at atmospheric pressure. A vacuum breaker is used to prevent back siphonage. A vacuum breaker used on a laboratory faucet may be either an atmospheric vacuum breaker (as defined above) or a laboratory faucet vacuum breaker having two independent acting check valves.

Valve - A device or fitting by which flow may be started, stopped or regulated by a movable part that opens or obstructs one or more passages.

Water - The liquid that descends from the clouds as rain, forms streams, lakes and seas, and is a major constituent of all living matter and that is an odorless, tasteless, very slightly compressible liquid oxide of hydrogen which appears bluish in thick layers, freezes at 0 C and boils at 100 C, has a maximum density at 4 C and a high specific heat, is feebly ionized to hydrogen and hydroxyl ions, and is a poor conductor of electricity and a good solvent.

Wrist Blade Handle - A handle that permits the control of a faucet with the wrist or forearm.

Wye Fitting - A type of mounting fitting that is similar to a panel flange except with two outlets.

5.0 Materials and Finishes

5.1 Materials Used in Laboratory Fittings

All materials used in laboratory service fittings shall be of the highest quality, shall be suitable for the intended use and shall meet or exceed the applicable standards listed below:

Brass Castings. Red brass castings shall be made of commercial red brass alloy conforming to ASTM Specification B30-04, C/Metal alloy, having a nominal composition of 81% copper.

Brass Forgings. Brass forgings shall conform to ASTM Specification B124-74, Alloy No. 377, having a nominal composition of 59% copper.

Seamless Brass Tube. Seamless brass tubing shall conform to ASTM Specification B135-74, Alloy No. 280, having a nominal composition of 60% copper.

Seamless Red Brass Pipe. Seamless red brass pipe in standard sizes shall conform to ASTM Specification B43-74, having a nominal composition of 84 to 86% copper.

Free-Cutting Brass Rod, Bar & Shapes for Use in Screw Machines. Components fabricated of free-cutting brass rod, bar and shapes for use in screw machines shall conform to ASTM Specification B16-74, having a nominal composition of 60 to 63% copper.

Aluminum Castings. Aluminum castings shall conform to ASTM Specification B26-74, Alloy No. SG70A, having a chemical composition of 0.25% maximum copper, 0.6% maximum iron, 6.5% to 7.5% range silicon, 0.35% maximum manganese, 0.20% to 0.40% range magnesium, 0.35% maximum zinc, 0.25% maximum titanium, 0.15% maximum total other, and balance aluminum.

Aluminum Rod, Bar, Tube and Shapes. All components fabricated of aluminum rod, bar, tube, and shapes shall conform to ASTM Specification B211-74, Alloy No. 6061-T6, having a nominal composition of 1.0% magnesium, 0.6% silicon, 0.25% chromium, 0.25% copper, and balance aluminum.

Polypropylene. All components fabricated of polypropylene shall be non-pigmented and conform to ASTM Specification D4104.

5.2 Finishes for Laboratory Service Fixtures and Safety Equipment

5.2.1 Finish Types

The finish on laboratory service fittings and safety equipment shall be categorized as either a (i) chrome plated finish, or (ii) a corrosion resistant coated finish. Other types of finishes are not recommended for use in a laboratory environment.

5.2.2 Chrome Plated Finishes

5.2.2.1 Description of Chrome Plated Finishes

Chrome plated finishes shall consist of either (i) a layer of chromium applied over a layer of nickel applied over a layer of copper that is applied over all exposed surfaces of the components of the fitting itself, or (ii) a layer of chromium applied over a layer of nickel that is applied over all exposed surfaces of the components of the fitting itself. Chrome plated finishes shall be applied in conformance with "Standard Specifications for Electrodeposited Coatings of Copper Plus Nickel Plus Chromium and Nickel Plus Chromium", ASTM B456-03. Finishes shall meet the requirements for Service Condition No. SC 4 (Very Severe Service) for nickel plus chromium coatings on copper or copper alloys.

5.2.2.2 Performance Tests for Chrome Plated Finishes

Chrome plated finishes shall meet the requirements for adhesion as specified in "Standard Practice for Qualitative Adhesion Testing of Metallic Coatings", ASTM B571-97. The applicable tests shall be the (i) burnishing test, (ii) chisel-knife test, (iii) file test, and (iv) peel test.

5.2.3 Corrosion Resistant Finishes

5.2.3.1 Description of Corrosion Resistant Finishes

Corrosion resistant finishes shall be an organic coated finish applied to all exposed surfaces of the fitting. The finish may be either colored or clear. Coating material shall be either epoxy, epoxy/polyester hybrid, or polyester. Corrosion resistant finish can be applied as either a wet finish or a dry, powder coated finish. In either case, following application of the coating material, the fitting shall be baked to cure the coating material. .

5.2.3.2 Performance Tests for Corrosion Resistant Finishes

Corrosion resistant finishes shall meet the following tests:

© SEFA - 5th Edition Desk Reference - Version 3.0

a. Fume Test.

Prepare samples of fittings having the corrosion resistant finish to be tested. Suspend samples in a container at least 6 cubic feet capacity, approximately 12" above open beakers, each containing 100 cc of 70% nitric acid, 94% sulfuric acid and 35% hydrochloric acid, respectively. After exposure to the fumes from these reagents for 150 hours, the finish shall show no discoloration, disintegration or other effects.

b. Direct Application Test

Prepare samples of flat brass panels with the corrosion resistant finish to be tested. The test shall consist of direct application of the reagents listed below.

Test Method A — For volatile chemicals, chemical spot tests shall be made by placing a cotton ball saturated with the reagent on the surface to be tested and covering with an inverted two-ounce wide mouth bottle to retard evaporation.

Test Method B — For nonvolatile chemicals, chemical spot tests shall be made by applying five (5) drops of each reagent to the surface to be tested and covering with a 1 1/4" diameter watch glass (concave side down) to confine the reagent.

All spot tests shall be conducted in such a manner that the test surface is kept wet throughout the entire test period and at a temperature of 77° F ±3° F. For both methods, leave the reagents on the panel for a period of one hour. At the end of the test period, (i) the reagents shall be flushed from the surface with water, (ii) the surface shall be scrubbed with a soft bristle brush under running water, and (iii) the surface shall be rinsed and dried. Immediately prior to evaluation, 16 to 24 hours after the reagents are removed, the test surface shall be scrubbed with a damp towel and dried.

Note: Where concentrations are indicated, percentages are by weight

Test Evaluation: Evaluation of test results shall be based on the following rating system:

Test No.	Chemical Reagent	Test Method
1.	Acetate, Amyl	A
2.	Acetate, Ethyl	A
3.	Acetic Acid, 98%	B
4.	Acetone	A
5.	Acid Dichromate, 5%	B
6.	Alcohol, Butyl	A
7.	Alcohol, Ethyl	A
8.	Alcohol, Methyl	A
9.	Ammonium Hydroxide, 28%	B
10.	Benzene*	A
11.	Carbon Tetrachloride	A
12.	Chloroform	A
13.	Chromic Acid, 60%	B
14.	Cresol	A
15.	Dichloracetic Acid	A
16.	Dimethylformamide	A
17.	Dioxane	A
18.	Ethyl Ether	A
19.	Formaldehyde, 37%	A
20.	Formic Acid, 90%	B
21.	Furfural	A
22.	Gasoline	A
23.	Hydrochloric Acid, 37%	B
24.	Hydrofluoric Acid, 48%	B
25.	Hydrogen Peroxide, 30%	B
26.	Iodine, Tincture of	B
27.	Methyl Ethyl Ketone	A
28.	Methylene Chloride	A
29.	Monochlorobenzene*	A
30.	Naphthalene	A
31.	Nitric Acid, 20%	B
32.	Nitric Acid, 30%	B
33.	Nitric Acid, 70%	B
34.	Phenol, 90%	A
35.	Phosphoric Acid, 85%	B
36.	Silver Nitrate, Saturated	B
37.	Sodium Hydroxide, 10%	B
38.	Sodium Hydroxide, 20%	B
39.	Sodium Hydroxide, 40%	B
40.	Sodium Hydroxide Flake	B
41.	Sodium Sulfide Saturated	B
42.	Sulfuric Acid, 33%	B
43.	Sulfuric Acid, 77%	B
44.	Sulfuric Acid 96%	B
45.	Sulfuric Acid, 77% & Nitric Acid, 70% equal parts	B
46.	Toluene	A
47.	Trichloroethylene	A
48.	Xylene	A
49.	Zinc Chloride, Saturated	B

***If the use of this chemical is permitted by law in the country where the testing is being performed.**

Level 0 **No detectable change.**
Level 1 **Slight change in color or gloss.**
Level 2 **Slight surface etching or severe staining.**
Level 3 **Pitting, cratering, swelling, or erosion of coating. Obvious and significant deterioration.**

Acceptance Level: Results will vary from manufacturer to manufacturer. Corrosion resistant finishes should result in no more than four Level 3 conditions. Suitability for a given application is dependent upon the chemicals used in a given laboratory.

c. Adhesion Test

Corrosion resistant finishes shall meet the standards set forth in "Standard Test Methods for Measuring Adhesion by Tape Test", ASTM D3359-02, "Standard Test Method for Mandrel Bend Test of Attached Organic Coatings", ASTM D522-93a and "Standard Test Method for Chipping Resistance of Coatings", ASTM D3170-03.

6.0 Color Coding

The handle of each laboratory fitting (except pressure regulators) shall be marked to indicate the particular liquid or gas that is delivered by or through such fitting. The handle or the index button fastened to the handle shall be color coded, and the index button shall be marked with a symbol to designate the service. Letters used to designate the service or symbol shall be legible and easy to read. Symbols shall be in accordance with the list below:

No	Service	Color	Code	Color
1	**Cold Water**	**Dark Green**	**CW**	**White**
2	**Hot Water**	**Red**	**HW**	**White**
3	Steam	Black	STM	White
4	Air	Orange	Air	Black
5	Gas	Dark Blue	Gas	White
6	Vacuum	Yellow	Vac	Black
7	Distilled Water	White	DW	Black
8	Oxygen	Light Green	OXY	White
9	Hydrogen	Pink	H	Black
10	Nitrogen	Gray	N	Black
11	All Other Rare Gases	Light Blue	Chemi-cal Sym-bol	Black

7.0 General Requirements for Laboratory Service Fittings

7.1 Workmanship

Laboratory service fixtures shall be of superior workmanship. Working parts shall be uniform and shall have smooth, even machining free of burrs, rough edges and ragged threads.

7.2 Handling

Fittings and components shall withstand normal handling and installation without damage or distortion of any part. Where special handling of a fitting is required, appropriate instructions shall either be attached to the fitting or packaged therewith.

7.3 Installation

7.3.1 Fitting Design

Fittings shall be designed to readily facilitate field installation, as follows:

a. All fittings shall be provided with suitable means to connect to a type of supply line in common use in laboratories.

b. The fitting manufacturer shall design its fittings or shall otherwise provide that fittings may be installed and connected without marring the finish or otherwise damaging the fitting or the surface on which it is to be mounted.

c. Deck mounted fittings shall be furnished with mounting shanks with sufficient length to be mounted on counter tops up to 1 1/2 inches thick. The diameter of the base of the fitting, flange or cover plate shall not be less than 1 1/2 inches.

Panel mounted combination hot and cold water faucets shall be furnished with union type inlets for ease of installation. The diameter of the flange or cover plate shall not be less than 1 1/2 inches.

e. Means shall be provided to securely mount the fitting to withstand loading normally encountered in service.

© SEFA - 5th Edition Desk Reference - Version 3.0

7.3.2 Field Installation

The installer responsible for the installation of laboratory service fittings shall follow good plumbing practice. Installers shall, in particular:

a. Thoroughly clean and flush supply lines prior to installing fittings, as pipe shavings, scale and other debris can be carried through a pipe and into a faucet or valve when the plumbing system is activated. Such foreign matter can damage valve components and interfere with the proper operation of the fitting.

b. Secure the fitting to a counter top or wall using the locknut and lock washer provided by the manufacturer. Tighten the locknut sufficiently to secure the fitting to the counter or wall, but care shall be taken not to over-tighten.

c. Observe the manufacturer's recommended test and working pressures for fittings. Testing or using a fitting at pressure for which it is not designed can result in leakage or failure.

d. Clean fittings using a soft cloth and soapy water. Use of abrasives, detergents or other cleaners can damage the finish on a fitting. Solvents shall not be used in or near a fitting, as solvents can dissolve lubricants used in the valve mechanism of a fitting.

7.4 Threads and Other Connections

7.4.1 Pipe Threads

a. Taper pipe threads on inlets and field assembled joints shall conform to ASME B1.20.1.

b. Threaded connections having IPS threads shall be tested with a torque wrench to apply torque load specified below without showing evidence of cracking or separation. Distortion or failure of any component part of the assembly shall constitute a failure of the assembly. Torque measurements shall be made with torque wrenches having a maximum allowable inaccuracy of 3% of the full scale reading.

Thread Assembling Torques:

Fitting Size (IPS)	Torque, Ft-Lb (N-m)
3/8	32 (43)
½	45 (61)
¾	65 (88)
1	95 (129)

7.4.2 Inlets for Sink Fittings

Shank lengths of deck mounted fittings shall be at least 1 ¾ inches (45 mm).

7.4.3 Solder Connections

The dimensions of solder joint end for connection to copper tube or copper tube fittings, except factory assembled parts, shall conform with respect to length and diameter of the joint section to the dimensions given in ASME B16.18 or ASME B16.22.

7.5 Marking

7.5.1 Product Marking

a. Each fitting shall bear permanent legible markings to identify the manufacturer. This marking shall be the trade name, trademark, or other mark known to identify the manufacturer or in the case of private labeling, the name of the customer or trademark for whom the fitting was manufactured. Such marking shall be located where it can be seen after installation. This marking shall be by means of either a permanent mark or a permanent label on the product.

b. Permanent labels shall comply with the performance requirements of UL 969. Labels shall comply with the requirements for indoor use where exposed to high humidity or occasional exposure to water, and shall have a temperature rating of at least 176 F (80 C).

7.5.2 Packaging

The package shall be marked with the manufacturer's name and model number, or in the case of private labeling, the name of the customer or trademark for whom the fitting was manufactured.

8.0 Water Faucets and Fittings

8.1 General Requirements

8.1.1 Working Pressures

All faucets and fittings for water service shall be designed to function at water working gauge pressures between 20 PSI (140 kPa) and 125 PSI (860 kPa), and for intermittent shock gauge pressures up to 180 PSI (1,240 kPa).

8.1.2 Working Temperatures

All faucets and fittings for water service shall be designed to function at supply temperatures from 40 F (4C) to 150 F (66 C) and shall withstand 180 F (82 C) for 0.5 hours without failure of the pressure envelope.

8.2 Valve Construction

a. All faucets and fittings for water service shall be designed to have either (i) a renewable unit or cartridge containing all working components subject to wear, or (ii) renewable working components, including seat, seat disc and seals. After installation of the faucet or fitting, all wearing parts shall be capable of being replaced and such replacement shall be able to be accomplished without removing the body from the piping or disconnecting the fitting from the supply pipe or surface on which it is installed.

b. Joints which may have to be taken apart to replace worn parts after the fitting is installed shall be designed so that they may be disassembled and reassembled without damaging or marring a significant surface of the fitting or a significant surface on which the fitting is installed.

c. The seat disc arrangement shall be made so that it will neither vibrate nor loosen in service and so that it can be replaced.

d. Packings shall be of such design and quality as to ensure leak-proof joints and be capable of providing satisfactory field service.

8.3 Goosenecks, Spouts and Outlet Fittings

8.3.1 General Construction

Goosenecks and spouts shall be one of the following types:

a. Rigid Construction. Goosenecks and spouts may be rigid (i.e. non-moveable) type. Rigid goosenecks shall thread directly into the faucet body and shall be constructed so as to be immobile in ordinary use. Rigid goosenecks are typically used at cup sink locations.

b. Swing Construction. Goosenecks and spouts may be swing or swivel type. Swing goosenecks and spouts shall be able to swivel around the faucet body. Swing goosenecks are typically used at laboratory sinks.

c. Rigid/Swing or Convertible Construction. Goosenecks and spouts may be rigid/swing or convertible construction. Goosenecks shall be capable of being either rigid or swing, and may be converted in the field from rigid to swing and vice versa.

8.3.2 Packings

Packings shall be of such design and quality as to ensure leak-proof joints and be capable of providing satisfactory field service.

Swing goosenecks and spouts designed to use an adjustable packing in the joint between the spout and the body shall be constructed so that the adjustments can be made without removing the gooseneck or spout.

8.3.3 Outlets

a. The outlet of all goosenecks and spouts shall have a 3/8 inch NPS or NPT female thread or be so designed as to accommodate an adapter with a 3/8 inch NPS or NPT female thread.

b. All outlet fittings and accessories, such as serrated hose ends, aerators and aspirators, shall have a 3/8 inch NPS or NPT male thread or be so designed as to accommodate an adapter with a 3/8 inch NPS or NPT male thread.

© SEFA - 5th Edition Desk Reference - Version 3.0

8.4 Testing

8.4.1 Strength Tests

8.4.1.1 Burst Strength Test

Fittings shall withstand a hydrostatic gauge pressure of 500 PSI (3,445 kPa) for two (2) minutes. The pressure shall be applied (i) for one (1) minute to the inlet with the valve(s) closed, and (ii) for one (1) minute to the inlet with the outlet blocked and the valve open. The fitting shall not show any permanent distortion or failure of the pressure envelope.

8.4.1.2 Bending Loads on Fittings

No cross section of a rigid waterway on the pressure side of a faucet or fitting shall be damaged when tested in accordance with the following test. A force shall be applied not closer to the cross-section being tested than twice the major diameter of that section. The bending moment shall be as specified below. This requirement shall not apply to waterways through a solder joint or equivalent.
Bending Loads on Fittings:

Nominal Size (In)	Bending Moment, Ft-Lb (N-m)
3/8	30 (40)
½	44 (60)
¾	60 (80)
1	74 (100)

8.4.1.3 Spout Strength Test

Goosenecks and spouts shall withstand a minimum bending moment of 175 in.-lbf (19.7 N-m) at the centerline of the joint between the gooseneck or spout and the body.

The faucet shall be mounted in accordance with the manufacturer's instructions. The angle of the gooseneck or spout outlet shall be measured from the vertical. Sufficient weight shall be applied to the centerline of the spout outlet to generate a 175 in.-lbf (19.7 N-m) bending moment at the centerline of the spout/body joint for three (3) minutes. One-half (.5) hours after the weight has been removed, the spout outlet angle shall be measured. The faucet shall have failed the test if the angle shall have changed from the angle measured prior to loading.

8.4.2 Handle Security Test

a. The faucet or fitting handle shall be designed so that it fits securely to the valve stem of the fitting, with no lateral movement or play, and it will not be damaged by normal use of the fitting to which it is attached. Except for faucets or fittings that are intended to be vandal-resistant (see below), the faucet or fitting handle shall be secured in such a manner that it can be removed in service using standard tools.

b. The handle shall be tested by loading an applied torque or force in the same manner required to close the valve to an amount of (i) 45 in.-lb (5.1 N-m) for rotary motion (torque), and (ii) 45 lbs (200.25 N) for linear normal motion (force). Failure shall be consist of damage or fracture of the handle or valve stem (including damage or stripping of the splines or broach in the handle).

c. The handle shall not fracture or pull off under an axial static load of 150 lbf (667 N).

8.4.3 Valve Operating Test

When closed, valves shall not leak at any test gauge pressure between 20 PSI (140 kPa) and 200 PSI (1,400 kPa) applied to the inlet for 5 minutes. The torque or force required to open or close a manually activated valve shall not exceed (i) 15 in-lb (1.7 N-m) for rotary motion (torque), or (ii) 15 lb (66.75 N) for linear normal motion (force). The force shall be applied at the extreme end of the handle. This test shall not apply to self-closing valves or nonmetallic fittings intended for use with purified water (see below).

8.4.4 Life Tests

8.4.4.1 Life Test for Valves

a. Valves shall be subjected to a life test for 500,000 cycles of operation. After completion of the life test, the valve shall control the flow of water at test pressure with an application of force or torque to the lever or handle not to exceed 50% more than the valve force or torque specified in Section 8.2.3 above.

b. The test procedure for valves shall be as follows:

1. The cold water supply shall be at ambient temperature and the hot water supply at 140 F +/- 10 F (60 C +/- 5 C). Both supplies shall be at the same flowing gauge pressure of 50 +/- 5 PSI (350 +/- 35 kPa). Manually operated fittings shall be operated from full off to three-eighths of a turn open, but not to exceed three-fourths of the maximum amount of turning from fully closed to fully open, and back to full off (one cycle) at the rate of 1,500 cycles per hour (minimum). The test apparatus shall apply sufficient load to close the valve throughout the test, but shall in no case exceed 50% greater than the load specified in Section 8.2.3 above.

2. Single control mixing valves shall be cycled alternately from off to full hot and back for 30 cycles, and from off to full cold and back for 30 cycles.

8.4.4.2 Life Test for Goosenecks and Spouts

a. Swing goosenecks and spouts shall be subjected to a life test for 50,000 cycles of operation. The swing gooseneck or spout shall (i) hold a hydrostatic gauge pressure of 125 PSI (860 kPa) for 1 minute after 25,000 cycles with the original seal in place; and (ii) hold a hydrostatic gauge pressure of 125 PSI (860 kPa) for 1 minute after 50,000 cycles. The seal may be replaced to pass once during this test.

b. The test procedure for swing goosenecks and spouts shall be as follows. The fitting shall be mounted on the life test apparatus with the axis about which the spout turns in line with the axis of the drive spindle. The forked end of the drive adapter shall be fitted loosely over the spout; the drive adapter shall be free to move vertically and shall be so weighed that a bending torque of 5 in.-lbf (0.6 N-m) shall be applied at the base of the spout; the apparatus shall be adjusted to turn the spout through a 90 degree arc, 45 degrees to each side of center. The turning mechanism shall be loaded to apply a static torque of 24 in.-lbf (2.7 N-m) to the centerline of the base of the spout. Cycle speed shall be 1,500 cycles per hour, and hot and cold water alternated every 6,000 cycles. Hot and cold water temperatures and pressures are to be as in the valve test.

8.4.5 High Temperature Extreme Test

Faucets and fittings designed for water service shall withstand a water temperature of 180 F (82 C) for 1 hour without failure of the pressure envelope. The fitting shall be connected to a hot water supply of 180 F (82 C). The cold water inlet shall be blocked. A shutoff valve shall be connected to the outlet and the hot water bled through it to maintain 180 F +/- 5F (82 C +/-3 C) within the fitting for 1 hour at a gauge pressure of 125 PSI (860 kPa). The fitting shall be considered to have failed if it leaks after the test when a gauge pressure of 125 PSI (860 kPa) is applied with the valve in a closed position.

8.4.6 Intermittent Shock Test

a. Faucets and fittings designed for water service shall withstand an intermittent shock gauge pressure to 180 PSI (1,240 kPa) from a simulated apparatus connected to the spout outlet as described below.

b. Water supply to the hot side of the fitting shall be at 140 F +/- 10 F (60 C +/- 5 C) such that the flow gauge pressure is 125 PSI at 2.0 +/-.

c. .24 GPM (860 kPa at 7.6 +/- .95 L/min) with the fitting in the full hot position. The cold side inlet shall be at a gauge pressure of 125 PSI (860 kPa) static and at ambient cold water temperature. A simulated apparatus such as rapid closing solenoid valve shall be connected downstream of the spout so as to create a shock gauge pressure of 180 PSI (1,240 kPa). The solenoid valve shall be cycled at a rate of two seconds open, two seconds closed for a duration of 30,000 cycles.

d. Any leakage shall be cause for rejection under the following conditions: (i) at the end of the test, examine the pressure envelope while still at test pressure; (ii) turn off the valve(s), disconnect the simulated appliance from the spout outlet, and examine with pressure still applied to the inlet.

© SEFA - 5th Edition Desk Reference - Version 3.0

9.0 Fittings for Natural Gas, Air, Vacuum, Special Gases and Steam Services

9.1 Valve Types, Applications, etc.

9.1.1 Ground Key Cock Valves

Due to the widespread use and acceptance of laboratory ball valves, ground key cock valves are no longer recommended for use in science laboratories.

9.1.2 Laboratory Ball Valves

a. Laboratory ball valves may be used for natural gas, air, vacuum and special gas services. In addition, laboratory ball valves may be used for water service. Where used for oxygen or high purity gases, valves shall be specially cleaned, lubricated and packed. Ball valves provide on/off control of the service, with a limited degree of metering or control of the service.

b. Ball valves operate by means of a spherical "ball" that is positioned between two seals that are within a body housing and press against the ball to form a watertight or gastight seal. Rotation of the ball 90 degrees opens and closes the valve. Valves have either a lever-type handle or a handle that locks in the closed position and must be lifted to open the valve. In either case, the valve handle shall visually indicate whether the valve is open or closed.

c. Ball valves shall be designed for a working pressure of at least 75 PSI.

9.1.3 Needle Valves

Needle valves may be used for control of all laboratory gases. Where used for oxygen and high purity gases, valves shall be specially cleaned, lubricated and packed. Needle valves shall not be used for water or steam services. Needle valves provide good metering of the service.

a. Needle valves shall have needle point internal construction and a replaceable seat.

b. Needle valves shall have a rated working pressure of at least 145 PSI.

9.1.4 Steam Valves

a. Valves for steam service shall be similar in construction to needle valves, except that valves shall have a renewable valve disc and replaceable seat.

b. Steam valves shall have a rated working pressure of at least 15 PSI steam pressure at 260° F maximum.

9.2 Valves for Burning Gases

9.2.1 Valve Construction

Valves for use with burning gases shall be ground key cock valves, ball valves, needle valves, push/turn valves or other valve type specifically designed for use with burning gas.

9.2.2 Certification

Valves for burning gas shall be certified to comply with ANSI Z21.15/Canadian Gas Association Standard CGA 9.1, "Manually Operated Gas Valves for Appliances, Appliance Connector Valves and Hose End Valves."

9.3 Mounting Fittings

Valves for laboratory gases shall be pipe mounted or installed on a horizontal or vertical surface using a mounting fitting. Such fitting may be a turret base, panel flange, wye fitting, etc. Where required, the manufacturer shall furnish a mounting shank with a locknut and lock washer for installation. Unless field installation conditions dictate otherwise, the fitting manufacturer shall install the valve into the mounting fitting and the mounting shank into the mounting fitting, and shall test the assembly as a single, complete unit prior to shipment.

9.4 Valves and Pressure Regulators for High Purity Gases

9.4.1 General

a. Valves and pressure regulators for use on high purity gas distribution systems shall be specially designed and manufactured for such use.

b. Valves and pressure regulators shall not contain any components manufactured from materials that will off-gas contaminants into the high purity gas stream.

c. Where a pressure regulator is installed, there shall be an internal filter, located either inside the pressure regulator or upstream of the pressure regulator, to prevent particles from contacting the seat.

d. All interior surfaces of the valve or pressure regulator that will be in contact with the high purity gas stream shall be ultrasonically cleaned using cleaning agents that will not negatively affect the purity or the gas.

e. Valves and pressure regulators shall be protected during transport and storage against damage and against contamination from particles, moisture, solvents and other foreign matter that could negatively affect the purity of the gas.

9.4.2 Valves and Pressure Regulators for 5.0 Gases

a. Pressure regulators for use with 5.0 gases shall have a metal diaphragm or bellows internal construction.

b. Valves and pressure regulators shall have a maximum leak rate through the valve or regulator of (i) less than 1 x 10-5 standard cubic centimetres per minute (SCCM) of helium with an outboard leakage test, and (ii) less than 1 x 10-5 SCCM of helium with an inboard leakage test. The manufacturer of the valve and pressure regulator shall certify the above leak rates.

9.4.3 Valves and Pressure Regulators for 6.0 Gases

Valves and pressure regulators for use with 6.0 gases shall have a metal diaphragm or bellows internal construction. Ball valves, gate valves and other types of valves that have valve stem packings are not suitable for use with 6.0 gases. Valves and pressure regulators shall have a maximum leak rate through the valve or regulator of (i) less than 1 x 10-6 standard cubic centimetres per minute (SCCM) of helium with an outboard leakage test, and (ii) less than 1 x 10-7 SCCM of helium to the atmosphere with an inboard leakage test. The manufacturer of the valve and pressure regulator shall certify the above leak rates.

10.0 Valves and Outlets for Use in Fume Hoods

Fittings for use in fume hoods consist of two primary components: (i) a remote control valve installed outside of the interior fume hood working area or chamber, and (ii) an outlet fitting installed within the fume hood chamber. The valve is controlled by a handle located outside of the fume hood chamber. The outlet fitting is connected to the valve (either directly or by a supply line from the valve), and the service or media is delivered through the outlet fitting within the fume hood chamber.

10.1 Valve Types

Remote control valves for use in fume hoods may be either rod-type or panel mounted, as follows:

10.1.1 Rod-Type Valves

Rod-type valves are installed either within the side wall or underneath the horizontal work surface of the fume hood. Valves may be either straight or angle pattern. Valves are fitted with an extension rod connected to the valve stem that projects through the front face or apron of the fume hood, and a handle is installed on the exposed end of the rod.

10.1.2 Panel Mounted Valves

Panel mounted valves are installed on either the side wall or front apron of the hood. The valve body is mounted on the panel using a locking ring or other locking mechanism. The valve is mounted so that all of the working components of the valve are accessible from the front exterior face of the hood, without accessing the internal side wall of the hood or disturbing the plumbing connections to the valve. Panel mounted valves offer two advantages over rod-type valves:

© SEFA - 5th Edition Desk Reference - Version 3.0

(i) All of the working components of a panel mounted valve are accessible from the front exterior face of the fume hood. Maintenance of the valve is facilitated, since the fume hood does not have to be entered or disassembled to gain access to the working components of the valve.

(ii) The extension rod used on rod-type valves may tend to twist as the valve is opened and closed. By eliminating the extension rod, panel mounted valves offer the user more precise control of the valve and thus a better ability to meter the flow through the valve.

10.2 Valve Construction

Valves for fume hood use shall have the construction set forth below:

a. Valves for water shall be similar in construction and performance to those described in Section 8 above.

b. Valves for non-burning laboratory gases shall be either ball or needle type and shall have the construction and performance described in Section 9 above.

c. Valves for burning gases shall be either ball type, needle type or push/turn type and shall have the construction and performance described in Section 9 above.

d. Valves for steam shall have the construction and performance described in Section 9 above.

10.3 Outlet Fittings

10.3.1 General Construction

Outlet fittings convey the media from the remote control valve to the interior of the fume hood chamber. They are generally mounted to the side wall or work surface of the fume hood utilizing a mounting shank with locknut and washer. Outlet fittings are available in a variety of configurations including turrets, flanges and goosenecks.

10.3.2 Corrosion Resistance

The outlet fitting installed inside the fume hood chamber will be exposed to the fumes that are generated within the hood. Accordingly, these fittings should be resistant to corrosion, either by (i) utilizing a corrosion resistant material for the outlet fitting that is suitable for the intended application, or (ii) supplying the fitting with a corrosion resistant finish in accordance with Section 5.2.3 above

10.3.3 Color Coding

The outlet fitting should be color-coded to designate the service or media delivered through the fitting. Identification can be accomplished a (i) color coding the corrosion resistant coating to match the service index color, or (ii) providing a color-coded index ring or plate. The color-coding shall match the corresponding remote control valve handle or index.

10.4 Vacuum Breakers for Use on Fume Hoods

Valves and outlet fittings for potable water service shall be equipped with vacuum breakers to prevent backflow or back-siphonage into the potable water system. Vacuum breakers shall meet the provisions of Section below. Vacuum breakers shall be installed (i) in accordance with the manufacturer's instructions and applicable plumbing codes, and (ii) in a location where they are accessible for maintenance.

10.5 Installation

Unless field conditions otherwise require, remote control valves and outlet fittings shall be installed, plumbed and pressure tested prior to shipment of the fume hood from the manufacturer's factory.

11.0 Faucets for Purified Water

11.1 General

Many laboratory processes and procedures require the availability and use of purified water. Purified water is domestic water that has been treated to reduce the concentration of impurities in it. Impurities may take the form of organic or inorganic substances, live bacteria and/or dissolved gases. Purity requirements vary depending upon the final use of the water.

However, purified water may be categorized as follows:

Laboratory Grade: water from which one or more categories of contaminants have been removed.

Reagent Grade: water from which all categories of contaminants have been removed, with sub-classifications Type IV through Type I indicating increasing quality.

Water purity is further measured in terms of resistance to electrical current. A value of 18.3 megohms-centimeter at 25 degrees C is the maximum achievable value of electrical resistivity.

Several processes to purify water are commonly used, including distillation, reverse osmosis (RO) and deionization (DI). The choice of process depends on a wide variety of factors, including the type of experimentation or research to be done in the laboratory, the type of purified water required, whether the purified water system is centralized or decentralized, and cost.

11.2 Fitting Materials and Construction

It is generally accepted that the system for treating and distributing purified water is more important to the purity of the delivered water than are the faucets or other fittings installed at the termination points of the system. However, in determining the most suitable type of fitting for dispensing purified water, care should be taken in the selection of the material and construction of the fitting. The materials and construction of fittings for purified water vary widely in the marketplace but, in general, may be divided into three categories:

a. Metallic Fittings. Faucets and fittings may have metallic construction. As such, all metal components that have contact with the purified water (such as the fitting body, gooseneck or spout and internal operating components) shall be (i) brass with an interior lining of an inert metal (such as tin), or (ii) stainless steel. All nonmetallic components (such as valve discs, seals, etc.) shall be compatible with the purified water delivered by the fitting. Metallic fittings shall have the construction and performance set forth in Section 8 above.

b. Nonmetallic Fittings. Faucets and fittings may have nonmetallic construction. As such, all nonmetallic components that have contact with the purified water (such as the fitting body, gooseneck or spout and internal operating components) shall be constructed of an inert plastic, such as PVC, non-pigmented polypropylene, polyvinylidene fluoride (PVDF) or polyethylene. All other components shall be compatible with the purified water delivered by the fitting.

c. Fittings with a Metallic Exterior and Nonmetallic Interior. Faucets and fittings may have an exterior metallic casing with an interior lining of inert plastic. All components that have contact with the purified water shall be nonmetallic and shall be compatible with the purified water delivered by the fitting.

Fittings and faucets may be supplied with manual (compression) control, self-closing control or combination manual/self-closing control. Faucets may be supplied incorporating a method of recirculating the pure water through the interior of the faucet. The recirculation shall permit the water to circulate completely to the valve mechanism, thus effectively removing any "dead leg"

12.0 Backflow Prevention

12.1 General

All laboratory fittings that deliver potable water shall be equipped with a backflow prevention device. Such device shall be either (i) an atmospheric vacuum breaker, or (ii) a laboratory faucet vacuum breaker. Atmospheric vacuum breakers shall be certified to comply with ANSI/ASSE Standard 1001, "Pipe Applied Atmospheric Type Vacuum Breakers." Laboratory faucet vacuum breakers shall be certified to comply with ANSI/ASSE Standard 1035, "Laboratory Faucet Vacuum Breakers."

© SEFA - 5th Edition Desk Reference - Version 3.0

13.0 Fittings for ADA Compliance

Pursuant to the requirements of Section 309.4 of ANSI/ICC A117.1, where a faucet or fitting will be used in an application that is intended to be ADA compliant, the maximum force required to open or close a manually activated fitting shall not exceed 5 lb. (22 N) at 80 PSI (550 kPa) static pressure.

14.0 Vandal-Resistant Fittings

Laboratory fittings are frequently installed in facilities such as high schools, junior colleges and other public facilities where they might be subject to vandalism and physical abuse. In such facilities, consideration should be given to installing service fixtures and fittings that are vandal-resistant. Vandal-resistant service fixtures shall be designed to meet the following criteria:

14.1 Resistance to Physical Abuse

Each fitting shall, so far as possible, resist turning, bending, breakage and unintended disassembly through acts of vandalism or physical abuse. Construction features shall include:

a. All threaded connections that will not require field service (including the connection between a valve and mounting fitting, and between a mounting fitting and mounting shank) shall be secured with a suitable adhesive so as to be non-removable.

b. Goosenecks and spouts shall be constructed of heavy duty pipe or tubing that is sufficient to resist bending and breakage.

c. Faucet bodies, turret bases and other mounting fittings shall be provided with locking pins or other means to prevent the fixture from being turned on the work surface, panel or wall surface.

d. Outlet fittings (such as serrated hose ends and aerators) shall either be of vandal-resistant design or shall be secured in place with an adhesive.

e. Index buttons shall be tamperproof.

14.2 Protection of Supply Lines

Each fitting shall be designed to protect against contaminants from entering the service lines by means of backflow, back-siphonage, or acts of vandalism. Accordingly, water fittings shall be furnished with vacuum breakers to prevent contamination of the potable water system through backflow or back-siphonage. Valves for laboratory gases shall be furnished with internal check valves to prevent backflow through the valve.

14.3 Maintenance

Vandal-resistant fixtures shall be designed to provide maintenance personnel with access to internal components for service requirements. Construction features shall include, but are not limited to:

Valve packing nuts shall be secured with set screws.

Vacuum breaker covers shall be secured with vandal-resistant screws that may be removed only by maintenance personnel.

15.0 Electrical Fittings

Electrical pedestal boxes may be provided on laboratory work surfaces for the installation of power and data devices and outlets. Electric pedestal boxes shall have a cast aluminum housing and shall be supplied with a mounting shank and locknut for installation on the countertop or work surface. Pedestal boxes shall have a satin (brushed) finish, polished finish or shall have a corrosion resistant coating in conformance with Section 5.2.3 above. Pedestal boxes shall be certified to comply with the provisions of ANSI/UL 514A, "Standard for Metallic Outlet Boxes."

16.0 Emergency Eye Wash and Shower Equipment

16.1 General Requirements

Emergency eye wash and shower equipment installed in laboratory facilities shall comply with the provisions of ANSI Z358.1, "Emergency Eye Wash and shower Equipment."

16.2 Materials and Finishes

Where emergency eye wash and shower equipment is installed within the workspace of a laboratory room, the metal components used in the equipment shall be (i) brass, with either a chrome plated or corrosion resistant finish, (ii) stainless steel, or (iii) galvanized steel with a corrosion resistant finish. Where emergency equipment is installed on or immediately adjacent to a laboratory work surface or countertop, the metal components used in the equipment shall be (i) brass, with either a chrome plated or corrosion resistant finish, or (ii) stainless steel. Chrome plated and corrosion resistant finishes shall conform to the provisions of Section 5 above.

Appendix

Protection of Potable Water Systems

In recent years, there has been a great deal of concern and discussion regarding the effects of contamination of drinking water on human health. As a result of these concerns, the American National Standards Institute (ANSI) and NSF International have adopted ANSI/NSF International Standard 61, Section 9, "Drinking Water System Components – Health Effects." This standard was promulgated to establish minimum requirements for the control of potential adverse human health effects from products which contact drinking water. This standard covers mechanical plumbing devices, components and materials that are typically installed at the endpoint of a water distribution system and are intended by the manufacturer to dispense water for human ingestion. In order to comply with this standard, many manufacturers of plumbing products have changed the materials used in their products, including reducing or removing lead from the brass alloys used for their products.

As noted above, ANSI/NSF 61, Section 9 applies only to products that are intended to dispense water for human consumption. The standard specifically exempts "all commercial, industrial, and institutional devices that are not (otherwise) included, including …laboratory fittings." (emphasis added) This standard thus specifically exempts laboratory faucets and fittings.

It is the position of SEFA that laboratory fittings are not designed, manufactured, sold or installed for the purpose of delivering water for human ingestion. SEFA endorses the position of ANSI and NSF International that the provisions of ANSI/NSF 61 do not apply to laboratory faucets and fittings. Moreover, ingesting water in a laboratory raises serious safety issues beyond exposure to the contaminants that might be found in drinking water, regardless of their origin. Safe laboratory work practices should always prohibit laboratory users from eating or drinking in a laboratory work environment.

© SEFA - 5th Edition Desk Reference - Version 3.0

Scientific Equipment & Furniture Association
Recommended Practices

SEFA 8M-2020
Laboratory Grade Metal Casework

SEFA World Headquarters
65 Hilton Avenue
Garden City, NY 11530

Tel: 516-294-5424
www.sefalabs.com

SEFA SPELLS SAFE

Table Of Contents

	Page
Committee Members	**255**
Foreword	**256**
Sections	
1.0 Scope	**257**
2.0 Purpose	**257**
3.0 Definitions	**257**
3.1 Description of Testing Apparatus	
4.0 Base Cabinets	**260**
4.1 Description of Test Unit	
4.2 Cabinet Load Test	
4.2.1 Purpose of Test	
4.2.2 Test Procedure	
4.2.3 Acceptance Level	
4.3 Cabinet Concentrated Load Test	
4.3.1 Purpose of Test	
4.3.2 Test Procedure	
4.3.3 Acceptance Level	
4.4 Cabinet Torsion	
4.4.1 Purpose of Test	
4.4.2 Test Procedure	
4.4.3 Acceptance Level	
4.5 Cabinet Submersion Test	
Not applicable to Metal Casework	
4.6 Spill Containment Test	
Not applicable to Metal Casework	
5.0 Doors	**262**
5.1 Door Hinge Test	
5.1.1 Purpose of Test	
5.1.2 Test Procedure	
5.1.3 Acceptance Level	
5.2 Door Impact Test	
5.2.1 Purpose of Test	
5.2.2 Test Procedure	
5.2.3 Acceptance Level	
5.3 Door Cycle Test	
5.3.1 Purpose of Test	
5.3.2 Test Procedure	
5.3.3 Acceptance Level	
6.0 Drawers	**263**
6.1 Drawer Static Test	
6.1.1 Purpose of Test	
6.1.2 Test Procedure	
6.1.3 Acceptance Level	
6.2 Drawer and Door Pull Test	
6.2.1 Purpose of Test	
6.2.2 Test Procedure	
6.2.3 Acceptance Level	
6.3 Drawer Impact Test	
6.3.1 Purpose of Test	
6.3.2 Test Procedure	
6.3.3 Acceptance Level	
6.4 Drawer Internal Impact Test	
6.4.1 Purpose of Test	
6.4.2 Test Procedure	
6.4.3 Acceptance Level	
6.5 Drawer Cycle Test	
6.5.1 Purpose of Test	
6.5.2 Test Procedure	
6.5.3 Acceptance Level	
7.0 Shelving	**265**
7.1 Description of Test Unit	
7.2 Shelf Load Test	
7.2.1 Purpose of Test	
7.2.2 Test Procedure	
7.2.3 Acceptance Level	

Table Of Contents (cont'd.)

Page

8.0 Cabinet Surface Finish Tests 266

8.1 Chemical Spot Test
8.1.1 Purpose of Test
8.1.2 Test Procedure
8.1.3 Acceptance Level

8.2 Hot Water Test
8.2.1 Purpose of Test
8.2.2 Test Procedure
8.2.3 Acceptance Level

8.3 Impact Test
8.3.1 Purpose of Test
8.3.2 Test Procedure
8.3.3 Acceptance Level

8.4 Paint Adhesion Test
8.4.1 Purpose of Test
8.4.2 Test Procedure
8.4.3 Acceptance Level

8.5 Paint Hardness Test
8.5.1 Purpose of Test
8.5.2 Test Procedure
8.5.3 Acceptance Level

8.6 Dart Impact Test
Not applicable to Metal Casework

8.7 Edge Delaminating Test
Not applicable to Metal Casework

8.8 Edge Impact Test
Not applicable to Metal Casework

8.9 Wear Resistance (Abrasion) Test
Not applicable to Metal Casework

Page

9.0 Wall Cabinets, Counter Mounted and Tall Units 269

9.1 Description of Test Unit

9.2 Load Test
9.2.1 Purpose of Test
9.2.2 Test Procedure
9.2.3 Acceptance Level

10.0 Tables 269

10.1 Description of Test Unit

10.2 Load Test
10.2.1 Purpose of Test
10.2.2 Test Procedure
10.2.3 Acceptance Level

10.3 Table Racking Test
10.3.1 Purpose of Test
10.3.2 Test Procedure
10.3.3 Acceptance Level

Endnotes 271

Forms 272

© SEFA - 5th Edition Desk Reference - Version 3.0

SEFA 8-M Committee Members

Committee Chair

Denis Coons - Bedcolab

Andy Sinnamon - Mott Manufacturing

Air Master Systems

Custom Diamond International

Eagle MHC

Genie Scientific

H2I Group

HEMCO Corporation

ICI Scientfic

Jeio Tech

Kewaunee Scientific Corporation

Kirksey Architecture

Labconco Corporation

Lab Crafters, Inc.

SMRT Architects

Waldner Laboreinrichtungen

Yamato Scientific

Foreword

SEFA Profile

The Scientific Equipment and Furniture Association (SEFA) is an international trade association comprised of manufacturers of laboratory furniture, casework, fume hoods and members of the design and installation professions. The Association was founded to promote this rapidly expanding industry and improve the quality, safety and timely completion of laboratory facilities in accordance with customer requirements.

SEFA Recommended Practices

SEFA and its committees are active in the development and promotion of Recommended Practices having domestic and international applications. Recommended Practices are developed by the association taking into account the work of other standard writing organizations. Liaison is also maintained with government agencies in the development of their specifications.

SEFA's Recommended Practices are developed in and for the public interest. These practices are designed to promote a better understanding between designers, architects, manufacturers, purchasers, and end-users and to assist the purchaser in selecting and specifying the proper product to meet the user's particular needs. SEFA's Recommended Practices are periodically updated. The Recommended Practices are numbered to include an annual suffix which reflects the year that they were updated. SEFA encourages architects to specify these Recommended Practices as follows: "SEFA 8M-2020".

SEFA Glossary of Terms

SEFA has developed a Glossary of Terms (SEFA 4-2020) for the purpose of promoting a greater understanding between designers, architects, manufacturers, purchasers and end users. The terms defined by SEFA are frequently used in contracts and other documents, which attempt to define the products to be furnished or the work involved. The Association has approved this Glossary in an effort to provide uniformity among those who use these terms. Where a specific Recommended Practice contains definitions which differ from those in the Glossary of Terms, then the definitions in the specific Recommended Practice should be used.

SEFA encourages all interested parties to submit additional terms or to suggest any changes to those terms already defined by the Association. The definitions should be used to help resolve any disputes that may arise or to incorporate the applicable terms in any contract or related documents.

SEFA Disclaimer

SEFA uses its best effort to promulgate Recommended Practices for the benefit of the public in light of available information and accepted industry practices. SEFA does not guarantee, certify or assure the safety or performance of any products, components, or systems tested, installed, or operated in accordance with SEFA Recommended Practices or that any tests conducted under its Recommended Practices will be non-hazardous or free from risk. SEFA encourages the use of third party independent testing where appropriate.

Note : ***Testing as described in this document must be performed and documented by a SEFA-approved third party testing facility. See Page 36 of the SEFA Desk Reference 5th Edition Version 3.0, or visit us at SEFALABS.COM for the most current list of SEFA-approved test labs.***

© SEFA - 5th Edition Desk Reference - Version 3.0

1.0 Scope

The scope of this document is intended to provide manufactures, specifiers, and users tools for evaluating the safety, durability, and structural integrity of metal laboratory grade furniture and complimentary items. This document is inclusive of casework (base units, wall mounted units, counter mounted units, tall units, tables and, shelving systems). Casework and shelving manufactured for laboratory use should be subjected to the tests and procedures outlined below.

Metal laboratory grade casework shall consist of base cabinets, wall cabinets, counter mounted cabinets, tall cabinets, and shelving.

Aggregate test results may vary by manufacturer. Procedures for testing performance criteria shall be as outlined in this document and results made available upon request. It is assumed that the test model reflects the performance criteria for all products. However there may be certain door/ drawer configurations and/or sizes outside the test unit configuration identified that may not meet certain parts of this test. A test unit has been identified in this document with the sole purpose of obtaining continuity of procedures and results in a scientific format.

Great care should be exercised when heavy loads are applied to the cabinet and appropriate safety precautions taken to insure safety of testing personnel. Properly trained personnel should perform all tests. SEFA assumes no liability for damage or injury as a result of conducting these tests.

The acceptance levels are based on the cumulative field experience and laboratory testing of SEFA members based on actual needs of laboratories. This is a performance- based document. Specifications proscribing specific materials, hardware, finishes, workmanship or construction may or may not meet acceptance levels of this document. If proscriptive components of the specifications conflict with compliance of this document then the Architectural proscribed elements take precedent.

Testing as outlined in this document must be performed and documented by a SEFA-approved independent third party testing facility.

2.0 Purpose

The purpose of this document is to describe the distinguishing performance characteristics of metal laboratory grade furniture and complimentary items. Furniture shall be of a type specifically designed and manufactured for installation and use in a laboratory.

Although aggregate test results may vary from manufacturer to manufacturer, procedures for testing performance criteria shall be as outlined in this document and results made available upon request. It is assumed that the test model reflects the performance criteria for all products regardless of construction, size, or style used. A test unit has been identified in this document with the sole purpose of obtaining continuity for procedures and results in a scientific format.

3.0 Definitions

Acceptance Levels - The acceptance level for each performance criteria is based on the cumulative experience of actual field testing and laboratory results of SEFA members. Acceptance levels describe the expected outcome of each test procedure.

ANSI/BIFMA - ANSI is the American National Standards Institute. Approval of an American National Standard requires verification by ANSI that the requirements for due process, consensus, and other criteria for approval have been met by the standards developer. BIFMA is the Business and Institutional Furniture Manufacturer's Association, an association of manufacturers of desk products and the like.

Apparatus - A machine or group of machines and accessories.

Arithmetic Mean - A number obtained by dividing the sum of a set of quantities by the number of quantities in a set; average.

ASTM - American Society for Testing and Materials.

Base Cabinets - A base cabinet is a storage device consisting of two ends, a back, a face and may or may not include a top or top frame. The face may be open, to access the storage area, or may be outfitted with one or more drawers and/or doors. A base cabinet is always placed on the floor and normally supports a surface. The top sur-face is normally no more than 42" (1,067mm) off the floor surface.

Best Practices - When given a choice of grade, the "best practice" is to select one that offers a well defined degree of control over the quality of workmanship, materials, and installation of a project. SEFA-8 Recommended Practices are written from a view of high quality laboratory furniture.

Cabinet Depth (Deep) - Given a front, bottom, two sides, and a top, the cabinet depth is a measure of the side of the cabinet, in its normal upright position, from the outside back to the outside front excluding doors and door fronts.

Cabinet Height (High) - Given a front, bottom, two sides, and a top, the cabinet height is a measure of the side of the cabinet, in its normal upright position, from the bottom edge of the side to the top, excluding any surface.

Cabinet Width (Wide) - Given a front, bottom, two sides, and a top, the cabinet width is a measure of the front of the cabinet in its normal upright position from one side to the other.

Casework - Base and wall cabinets, display fixtures, and storage shelves. The generic term for both "boxes" and special desks, reception counters, nurses stations and the like. Generally includes the tops and work surfaces.

Chase (Plumbing Area) - Space located behind the back of the base cabinet used to house plumbing or electric lines.

Combination Unit - A base unit of the type that has both door(s) and drawer(s).

Counter Mounted Cabinet - A counter mounted cabinet is a wall cabinet (usually with a height of approximately 48" [1,219mm] and is typically mounted on the work surface or shelf, as in a reagent shelf).

Cupboard (Door Unit) - That portion of the cabinet with no drawer(s) that may be enclosed by doors.

Drawer - A sliding storage box or receptacle opened by pulling out and closed by pushing in.

Free Standing - Requiring no support or fastening to other structures.

Hardware - Items such as screws, pulls, hinges, latches, locks, and drawer slides used in the construction of casework.

High Density Shielding - A barrier made of lead.

Joinery – The junction of two pieces intended to be permanently connected.

Laboratory Furniture - Furniture designed and manufactured for installation and use in a laboratory.

Latch - A piece of hardware designed to hold a door closed.

Leveling Screws (Levelers) - Threaded components designed to allow adjustment of the cabinet vertically as needed for leveling.

Nominal Dimensions - Not all cabinet manufacturers produce product to the identical dimensions. All dimensions given in this document are accurate to within five percent, which is considered nominal.

Permanent Damage - Destruction to material or joinery that would require repair in order to return to its original state.

Permanent Deformation - Deflection that has exceeded the limits of the product, thus changing the original shape of the product

© SEFA - 5th Edition Desk Reference - Version 3.0

Permanent Deterioration - Erosion or corrosion of material such that the component will never return to its original shape.

Permanent Failure - See "permanent damage."

Pulls - Articles of hardware used to grasp and open/close the door or drawer (see also hardware).

Rack Resistance - The ability of a product to resist stresses that tend to make the product distort and the drawers to become misaligned.

Rail - A horizontal member extending from one side of the cabinet to the other.

Reagent - A substance used because of its chemical or biological activity.

Removable Back - A panel located on the inside back of the base cabinet, which is removable in order to gain access to utilities.

Stainless Steel - Iron based alloys containing more chromium than the 12% necessary to produce passivity (less reactive), but less than 30%.

Submersion - Covered with water.

Tables - An article of furniture having a flat, horizontal surface supported by one or more support members (legs), and a frame (apron).

Tall Cabinet (Full Height Unit) - A tall cabinet is a storage device that consists of two ends, a top and bottom panel, a back and a face. The face may be open to access the storage area or may be outfitted with one or more drawers and/or door(s). A tall cabinet is always placed on the floor and is nominally 84" (2,134mm) high.

Torsion – A force acting at a distance which tends to twist or rotate an object or cabinet.

Uniformly Distributed – A force applied evenly over the area of a surface.

Unobstructed Entry - A cabinet is deemed to be unobstructed if access to the entire storage area is completely without obstacle.

Upright Position - A cabinet oriented in its intended position.

Wall Cabinet - A wall cabinet is a storage device consisting of two ends, a back, a top, bottom, and a face. The face may be open to access the storage area or may be outfitted with one or more door(s). The wall cabinet usually does not include a drawer. A wall cabinet is always mounted on a vertical surface such as a wall, a divider, panel or some other vertical structure. A wall cabinet is usually less than 48" (1,219mm) high.

Work Surface - A normally horizontal surface used to support apparatus at a convenient height above the floor. Work surfaces are normally positioned atop a base cabinet or table structure.

3.1 Description of Testing Apparatus

Solid Steel Bar - A square solid steel bar 2 1/2" (63mm) square, 28 1/4" (717mm) long, weighing 50 pounds (22.679 Kg).

Sand or Shot Bag (10 pounds [4.545 Kg]) - A bag of plastic or cloth with the approximate dimensions 10 9/16" (268mm) x 11" (279mm) as in typical "gallon size re-closable stor-age bags." Filled with enough sand or shot so that contents weigh 10 pounds (4.545 Kg).

Sand Bag (20 pounds [9.071 Kg]) - Two 10 pound (4.545 Kg) sand bags bound together.

Shot Bag (100 lbs. [45.359 Kg]) - A plastic or cloth bag of sufficient size to contain 100 pounds (45.359 Kg) of shot.

Cycling Mechanism - Per ANSI BHMA 156.9.-2003

Steel Rod - A 2" (51mm) diameter by 12" (305mm) long rod, approximately 10 pounds (4.535 Kg) in weight.

Hot Water - To be considered "hot water," the temperature of the water must be between 190º F to 205º F (88º C to 96º C).

One Pound Ball - Solid steel sphere approximately 2" (51mm) in diameter.

Hardwood Corner Block - A block of hardwood 2" (51mm square) by 1" (25.4 mm) high.

4.0 Base Cabinets

4.1 Description of Test Cabinet

The base cabinet shall be a combination of cupboard and drawer per Figure 1. The base cabinet shall have nominal dimensions ±1"(25.4mm) of 48" (1,219.2mm) wide, 35" (889.0mm) high, and 22" (558.8mm) deep. The drawer shall be above the cupboard, full width and approximately one-fourth the height of the cabinet's face opening. The inside depth of the drawer shall be no less than 18"(457.2mm). The drawer in the full open position shall expose no less than 2/3 of the drawer interior. Cupboard shall be double-door design and provide unobstructed entry into the cabinet interior with the doors open. The unit shall contain one adjustable shelf. The cabinet back shall be the removable type (per manufactures standard design as used for access to the plumbing or chase area) with the removable panel removed.

The cabinet shall be free standing, squared and leveled and sitting 1" (25.4mm) off the floor on all four leveling screws. When leveling screws are not required, the cabinet shall be squared and leveled and sitting 1" (25.4mm) off the floor atop four hardwood corner blocks 2" (50.8mm) square and 1" (25.4mm) high. A top of 1" (25.4mm) thick 37-50 pcf medium density fiberboard shall be freely positioned on the cabinet without glue or fasteners of any kind. The top dimensions will be such that it will overhang the cabinet perimeter by 1" (25.4mm). Its weight shall be included in the test as live load. Before conducting the test, a visual examination shall be conducted to verify that the unit configuration and setup conditions are appropriate. Operate doors and drawers. Doors should be free moving and latch properly. Inspect the unit for dimensions and note the fit of doors and drawers to the cabinet body. Open and close the drawer. The drawer should be free moving and function as specified by the manufacturer. Discontinue evaluation if unit is not in compliance or if malfunction is noted.

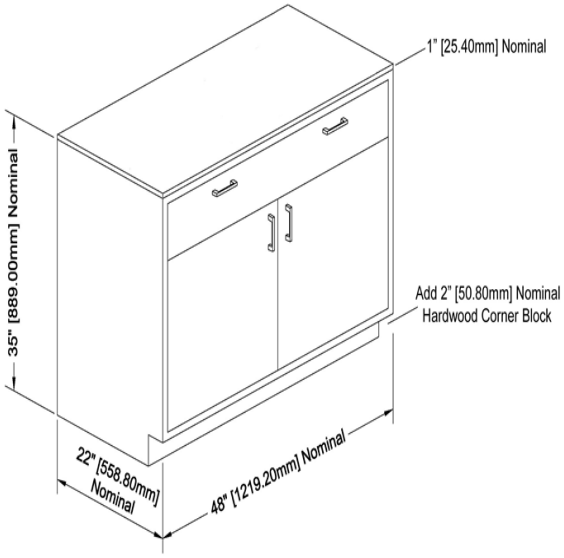

Figure 1. Description of Test Base Cabinet

4.2 Cabinet Load Test -

4.2.1 Purpose of Test

The cabinet load test will challenge the structural integrity and load bearing capability of the cabinet construction. This test will demonstrate the ability of the cabinet to support heavy applied loads. This is not intended to test the functional characteristics of the cabinet under heavy loads.

4.2.2 Test Procedure

Verify that the cabinet is level and supported only by the levelers. Load the cabinet top by using 2000 pounds (907.2 Kg) of solid steel bars (per Section 3.1) stacked five high and spaced per Fig 2. After ten minutes, unload the cabinet.

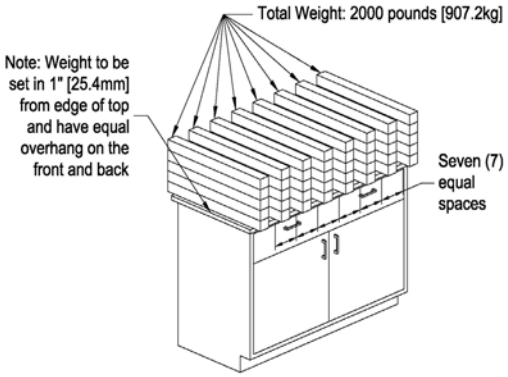

Figure 2. Cabinet Load Test Configuration

© SEFA - 5th Edition Desk Reference - Version 3.0

4.2.3 Acceptance Level

The cabinet will have no signs of permanent failure. After the load is removed, inspect the levelers. Any deformation shall not interfere with the function of the leveling system.

4.3 Cabinet Concentrated Load Test

4.3.1 Purpose of Test

The purpose of this test is to challenge the functional characteristics of the cabinet when subjected to a concentrated load on the center of the cabinet top.

4.3.2 Test Procedure

Using solid weights or 10 pound (4.535 Kg) sand bags (per Section 3.1), apply a total of 200 pounds (90.718 Kg) to the top of the cabinet along the cabinet centerline (see Figure 3). Operate doors and drawers.

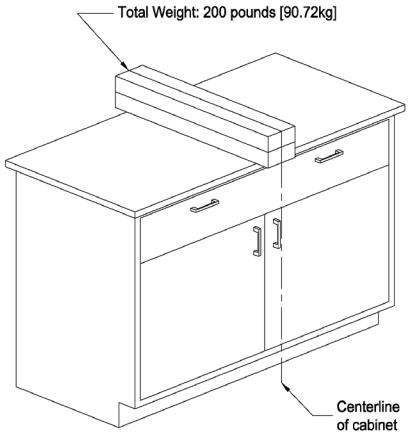

Figure 3. Base Cabinet Concentrated Load Test

4.3.3 Acceptance Level

Door and drawer operation shall be normal under condition of test load. There shall be no signs of permanent deformation to front rail, cabinet joinery, doors, or drawers.

4.4 Cabinet Torsion

4.4.1 Purpose of Test

This test will evaluate the structural integrity of the cabinet construction when subjected to a torsional load.

4.4.2 Test Procedure

Measure the diagonal corners and record them as the pre-load baseline reference. The cabinet shall be supported on all four corners with four inch square blocks located not more than 6 inches (152.4mm) in from each corner. Load the rear corner seven inches in from the corner at a 45 degree angle with 350 lbs. (158.757 Kg). Load the front corner seven inches in from the corner at a 45 degree angle with 200 lbs. (90.718 Kg). Carefully pick up the cabinet with a lift truck or similar device just off of the blocks and then remove the front left block under the 200 lbs. (90.718 Kg) and then resettle the cabinet on the remaining 3 blocks for a period of 24 hrs. After the 24 hr. period, repeat the last 3 steps in reverse order. After the unit has the load removed, the unit shall to be re-measured on the same diagonal measurements with the difference recorded.

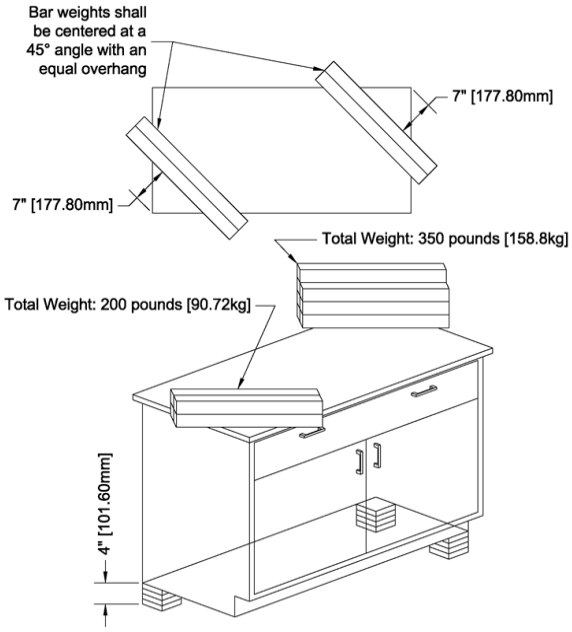

Figure 4. Base Cabinet Torsion Test Procedure

4.4.3 Acceptance Level

When returned to normal position, the operation of the cabinet shall be normal, and there will be no permanent damage. The difference between the two measurements taken from measuring the diagonal corners shall be no more than 1/8" (3.175mm).

4.5 Cabinet Submersion Test

Not applicable to Metal Casework

4.6 Spill Containment Test

Not applicable to Metal Casework

5.0 Doors

5.1 Door Hinge Test

5.1.1 Purpose of Test

This test will demonstrate the durability of the door, door attachment and its hardware (hinge leaf, screws, etc.) to an applied load of 200 pounds (90.72 Kg).

5.1.2 Test Procedure

Remove the shelf for this test. With unit and top set as described in Section 4.1, add sufficient weight to the top in order to prevent overturning. With cabinet door opened 90-degrees, hang a sling made up of two 100 pound (45.359 Kg) weights (shot bags or solid weights) over top of the door at a point 12" (304.8mm) out from the hinge centerline (see Figure 5). Slowly move door through two full cycles of the hinge at 160-degree arc. Remove weight and swing door through its full intended range of motion and close door.

5.1.3 Acceptance Level

The open door shall withstand a load of 200 pounds (90.72 Kg) when applied at a point 12"(304.8mm) from the hinge centerline without permanent damage. Operation of the door, after test shall show no significant permanent damage that will cause binding of the door or hinges or that will adversely affect operation of the catch.

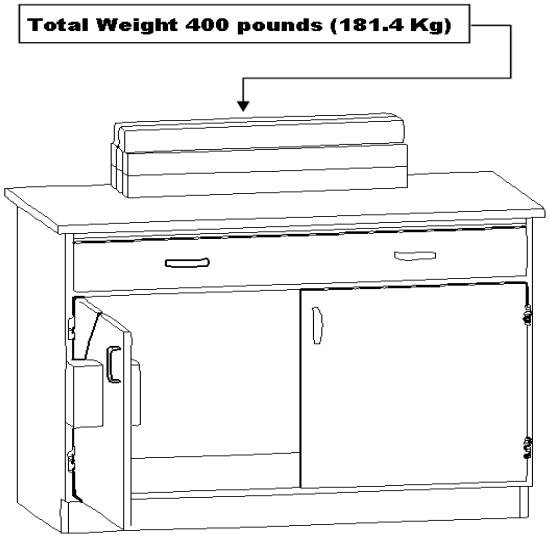

Fig 5 Base Cabinet Door Load Configuration

5.2 Door Impact Test

5.2.1 Purpose of Test

This test will demonstrate the resistance of a 240 inch-pound (27.1 N-m) impact to the door face. Only units that extend below the work surface should be subjected to this test. This test should not be inclusive of glass doors.

5.2.2 Test Procedure

With unit and top set as described in Section 4.1, add sufficient weight to the top in order to prevent overturning. A 20 pound (9.07 Kg) sand bag (Section 3.1) shall be suspended and dropped

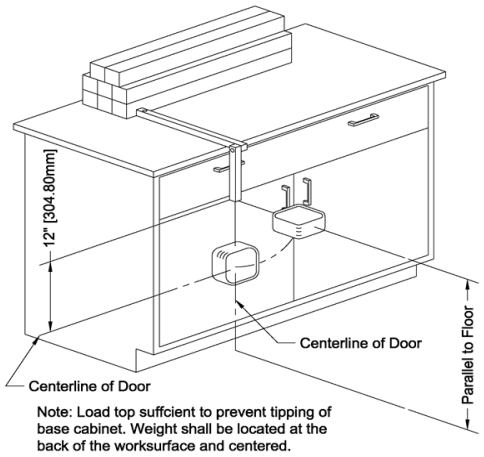

Figure 6. Base Cabinet Door Impact Test Configuration

© SEFA - 5th Edition Desk Reference - Version 3.0

to provide an impact of 240 inch-pounds (27.1 N-m) at the center of the closed door. (See Fig 6.)

5.2.3 Acceptance Level

After the test, the door and catch shall operate normally and show no signs of permanent damage. A dent or depression is an indication of permanent damage. This test is not intended to evaluate the cabinet finish.

5.3 Door Cycle Test

5.3.1 Purpose of Test

This test will demonstrate the durability of the door hinge hardware to withstand 100,000 cycles as a reliable measure for longevity).

5.3.2 Test Procedure

Open the door 5 degrees. A cycling mechanism shall be used to operate the door 90 degrees from the 5 degree open position. The door shall operate for 100,000 cycles continuously, without hinge adjustment, at a speed of 15 cycles per minute.

5.3.3 Acceptance Level

Door shall operate for the full cycle period without deterioration that will significantly affect the function of the door. The door shall operate freely without binding.

6.0 Drawers

6.1 Drawer Static Test

6.1.1 Purpose of Test

This test will demonstrate the ability to support a point load given to the front of the drawer and will challenge the drawer suspension system and the attachment of the drawer head to the drawer.

6.1.2 Test Procedure

With unit and top set as described in Section 4.1, add sufficient weight to the top in order to

Fig. 6 Base Cabinet Drawer Static Load Test Configuration

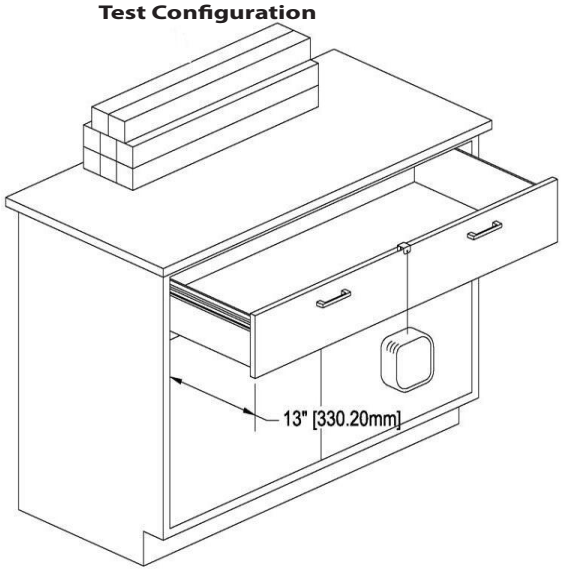

Note: Load top suffcient to prevent tipping of base cabinet. Weight shall be located at the back of the worksurface and centered.

prevent overturning. Open the drawer to 13" (330.2mm) of travel and hang 150 pounds (68.03 Kg) from the drawer head at the centerline of the drawer for five minutes. Remove the weight and operate the drawer through the full cycle.

6.1.3 Acceptance Level

There shall be no interference with the normal operation of the drawer and the drawer head should remain tightly fastened to the drawer.

6.2 Drawer and Door Pull Test

6.2.1 Purpose of Test

This test will evaluate the strength of the pull and pull hardware.

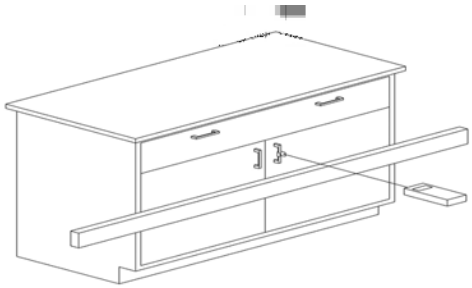

Figure 8. Base Cabinet Door and Drawer Pull Horizontal Load Test Configuration

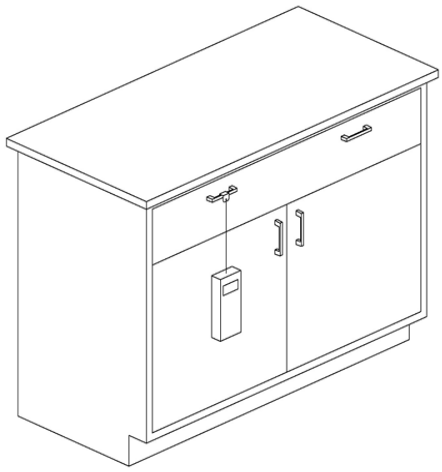

Figure 9. Base Cabinet Door and Drawer Pull Vertical Load Test Configuration

6.2.2 Test Procedure

Pulls are to be installed in accordance with manufacturer's practice using specified attaching hardware and method. Block door and drawer closed. Using a force gauge attached with a 1" (25.4mm)wide bracket (see Figure 8), apply a force of 50 pounds (22.68 Kg), for 15 seconds, perpendicular to each pull. Revise setup to apply force downward (see Figure 9).

6.2.3 Acceptance Level

Pulls shall resist force without breakage. After completion of test and removal of weight, there shall be no significant permanent deformation.

6.3 Drawer Impact Test

6.3.1 Purpose of Test

This test will demonstrate the resistance to impact of the drawer bottom.

6.3.2 Test Procedure

Remove drawer; support each corner with 2"x2"x1" (50.8 x 50.8 x 25.4 mm) supports. Drop a 10 pound (4.545 Kg) sand or shot bag from a height of 24" (609.6 mm) into the bottom of the drawer at the center of the width of the drawer. Remove the sand or shot bag.

6.3.3 Acceptance Level

No damage or breakout of the drawer bottom.

6.4 Drawer Internal Rolling Impact Test

6.4.1 Purpose of Test

This test will evaluate the strength of the drawer head, bottom, and back as a result of opening and closing the drawer with a rolling load.

6.4.2 Test Procedure

Position the drawer on a table at a 45-degree angle per Figure 7. Place a 2" (50.8mm) diameter by 12" (304.8mm) long steel rod (approximately 10 pounds [4.545 Kg]) 13" (330.2mm) from the target impact area such that the rod will roll freely to impact the back of the drawer. Subject the back to three impacts and reverse the drawer to subject the front to three additional impacts.

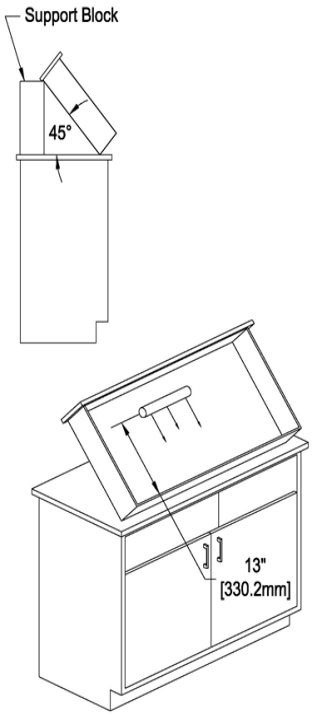

Figure 10. Base Cabinet Drawer Internal Rolling Impact Test Configuration

© SEFA - 5th Edition Desk Reference - Version 3.0

6.4.3 Acceptance Level

The drawer shall show no permanent damage. All joinery shall be intact and the drawer, when replaced in the unit, shall operate normally. Minor scratches and dents are acceptable.

6.5 Drawer Cycle Test

6.5.1 Purpose of Test

This test is intended to replicate years of operation of a drawer under full load.

6.5.2 Test Procedure

Attach a bracket to the center of the drawer front by bolting it through the drawer front and body. Attach a cycling mechanism to the bracket using a free floating poly block and pin.

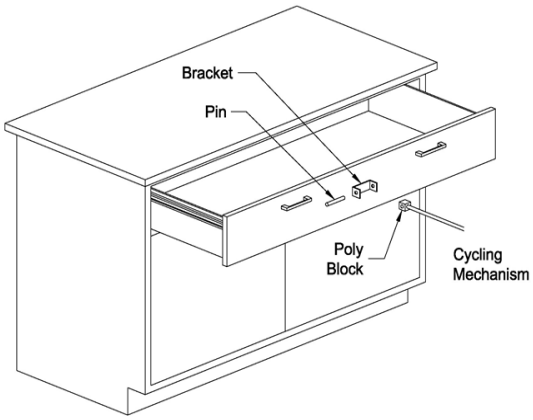

Figure 11. Drawer Cycling Mechanism Test Configuration

Laboratory Load – 100 pounds (45.36kg) A static of 100 pounds (45.35kg) (using ten 10-pound [4.54kg] sandbags per Section No. 3.1) shall be uniformly distributed in the drawer. Measure force required to activate the drawer. Operate from a closed position to within ¼" (6.35mm) of full extension for 50,000 cycles at a rate not to exceed 10 cycles per minute.

Heavy Duty Laboratory Load – 150 pounds (68.04kg) A static of 150 pounds (68.04kg) (using fifteen 10-pound [4.54kg] sand bags per Section No. 3.1) shall be uniformly distributed in the drawer. Measure force required to activate the drawer. Operate from a closed position to within ¼" (6.35mm) of full extension for 50,000 cycles at a rate not to exceed 10 cycles per minute.

6.5.3 Acceptance Level

The drawer shall operate freely without evidence of dragging, rubbing or binding. The force required to open and close loaded drawer shall not be greater than 8 pounds (3.63kg) to activate hardware.*

The American's with Disabilities Act (ADA) requires a force no greater than five pounds to activate hardware. The load rating in this document is intended only for testing conditions where loads challenge the durability of the hardware. Under actual conditions, drawer loading should be reduced to levels that result in compliance with ADA as applicable.

7.0 Shelving

7.1 Description of Test Unit

Metal shelving shall be tested using the following procedure. The shelves to be tested are described in Sect. 4.1 and 9.1 "Description of Test Cabinet". Shelves on both base and wall units shall be tested to this section.

7.2 Shelf Load Test

7.2.1 Purpose of Test

This test will demonstrate the ability of a shelf and its mounting hardware to support normal laboratory loads.

7.2.2 Test Procedure

A shelf shall be mounted in a manner in which it is designed. Measure the distance from the underside of the shelf to a reference point located on the center line of the shelf, 1/2" from the front edge of the shelf. Use shot or sand bags weighing 10 pounds (4.535 Kg) each. Unless otherwise specified, load the shelf uniformly to 40 pounds (18.14 kg) per square foot of shelf area to a maximum of 200 pounds (90.71 Kg). Measure

the deflection of the shelf by measuring the distance to the reference point and calculating the difference between the two measurements. Record data and remove the load.

7.2.3 Acceptance Level

The allowable maximum deflection of a shelf is 1/180 of the span and not in excess of .25" (6.35mm). The following formula may be used to calculate the approximate deflection expected from a uniformly distributed load:

D(max.) = 5W L^3 / 384 E I

WHERE:

D = Deflection in inches (Maximum 1/180 span, not to exceed .25" (6.35mm).

W = (Design Load) x (Shelf Depth in Inches) x (Shelf Span in Inches) (Design Load = 40 pounds (18.14 Kg) / square foot divided by 144)

"W" shall not exceed 200 pounds (90.72 Kg).

L = Span between supports in inches

E = Modulus of Elasticity Steel = 29 * 10^6 psi 1-M-2

I = Cross section moment of inertia.

8.0 Cabinet Surface Finish Tests

8.1 Chemical Spot Test

Users should consider the chemical and staining agents that might be used near the laboratory casework. Common guidelines can be found by referring to: The casework manufacturer printed data for chemical and stain resistance, Because chemical and stain resistance is affected by concentration, time, temperature, humidity, housekeeping and other factors, it is recommended that users test samples in their actual environment with the substances they use.

8.1.1 Purpose of Test

The purpose of the chemical spot test is to evaluate the resistance a finish has to chemical spills.
Note: Many organic solvents are suspected carcinogens, toxic and/or flammable. Great care should be exercised to protect personnel and the environment from exposure to harmful levels of these materials.

8.1.2 Test Procedure

Provide 2" x 2" (50.8mm v 50.8mm) 18 gauge CRS test sample with between 2 and 4 mills of the manufacturer's standard paint finish applied. The sample to be tested for chemical resistance as described herein.

Place panel on a flat surface, clean with soap and water and blot dry. Condition the panel for 48-hours at 73º +/- 3ºF (23º +/- 2ºC) and 50 +/- 5% relative humidity or the currently accepted guideline set by ASTM. Test the panel for chemicalresistance using forty-nine different chemical reagents by one of the following methods.

Method A - Test volatile chemicals by placing a cotton ball saturated with reagent in the mouth of a 1-oz. (29.574cc) bottle and inverting the bottle on the surface of the panel.

Method B - Test non-volatile chemicals by placing five drops of the reagent on the surface of the panel and covering with a 24mm watch glass, convex side down.

For both of the above methods, leave the reagents on the panel for a period of one hour. Wash off the panel with water, clean with detergent and naptha, and rinse with deionized water. Dry with a towel and evaluate after 24-hours at 73º +/- 3ºF (23º +/- 2ºC) and 50 +/- 5% relative humidity, or the currently accepted guideline set by ASTM using the following rating system.

Level 0 - No detectable change.
Level 1 - Slight change in color or gloss.
Level 2 - Slight surface etching or severe staining.
Level 3 - Pitting, cratering, swelling, or erosion of coating. Obvious and significant deterioration.

© SEFA - 5th Edition Desk Reference - Version 3.0

Test No.	Chemical Reagent	Test Method
1.	Acetate, Amyl	A
2.	Acetate, Ethyl	A
3.	Acetic Acid, 98%	B
4.	Acetone	A
5.	Acid Dichromate, 5%	B
6.	Alcohol, Butyl	A
7.	Alcohol, Ethyl	A
8.	Alcohol, Methyl	A
9.	Ammonium Hydroxide, 28%	B
10.	Benzene*	A
11.	Carbon Tetrachloride	A
12.	Chloroform	A
13.	Chromic Acid, 60%	B
14.	Cresol	A
15.	Dichloracetic Acid	A
16.	Dimethylformamide	A
17.	Dioxane	A
18.	Ethyl Ether	A
19.	Formaldehyde, 37%	A
20.	Formic Acid, 90%	B
21.	Furfural	A
22.	Gasoline	A
23.	Hydrochloric Acid, 37%	B
24.	Hydrofluoric Acid, 48%	B
25.	Hydrogen Peroxide, 30%	B
26.	Iodine, Tincture of	B
27.	Methyl Ethyl Ketone	A
28.	Methylene Chloride	A
29.	Monochlorobenzene*	A
30.	Naphthalene	A
31.	Nitric Acid, 20%	B
32.	Nitric Acid, 30%	B
33.	Nitric Acid, 70%	B
34.	Phenol, 90%	A
35.	Phosphoric Acid, 85%	B
36.	Silver Nitrate, Saturated	B
37.	Sodium Hydroxide, 10%	B
38.	Sodium Hydroxide, 20%	B
39.	Sodium Hydroxide, 40%	B
40.	Sodium Hydroxide Flake	B
41.	Sodium Sulfide Saturated	B
42.	Sulfuric Acid, 33%	B
43.	Sulfuric Acid, 77%	B
44.	Sulfuric Acid 96%	B
45.	Sulfuric Acid, 77% & Nitric Acid, 70% equal parts	B
46.	Toluene	A
47.	Trichloroethylene	A
48.	Xylene	A
49.	Zinc Chloride, Saturated	B

***If the use of this chemical is permitted by law in the country where the testing is being performed.**

Note: Percentages are by volume.

8.1.3 Acceptance Level

Results will vary from manufacturer to manufacturer due to differences in finish formulations. Laboratory grade finishes shall result in no more than four (4) Level 3 conditions. Individual test results, for the specified 49 reagents, will be verified with the established third party, independent SEFA 8 test submittal form. Suitability for a given application is dependent upon the chemicals used in a given laboratory.

8.2 Hot Water Test

8.2.1 Purpose of Test

The purpose of this test is to insure the surface is resistant to hot water.

8.2.2 Test Procedure

Hot water (190ºF to 205ºF [88ºC to 96ºC]) shall be allowed to trickle (with a steady stream and at a rate of not less than 6 ounces [177.44cc] per minute) on the finished surface, which shall be set at an angle of 45º, for a period of five minutes.

8.2.3 Acceptance Level

After cooling and wiping dry, the finish shall show no visible effect from the hot water.

8.3 Impact Test

8.3.1 Purpose of Test

The purpose of this test is to evaluate the ductility of the coating.

8.3.2 Test Procedure

An 18 gauge CRS sample panel shall measure approximately 14" x 24" (355.6mm x 609.6mm). The panel shall have between 2 and 4 mills of the manufactures standard paint finish applied.

Position the panel on a smooth concrete floor. A one-pound ball (approximately 2" [50.8mm] in diameter) shall be dropped from a distance of 12"

(304.8mm) onto a flat horizontal surface.

8.3.3 Acceptance Level

There shall be no visual evidence to the naked eye of cracks or checks in the finish due to impact.

8.4 Paint Adhesion Test

8.4.1 Purpose of Test

The paint adhesion test is used to determine the bond of the coating to steel.

8.4.2 Test Procedure

Using one of the samples described in section 10.1.2, perform the following test.

This test is based on ASTM D3359-02 "Standard Test Methods for Measuring Adhesion by Tape Test1 – Test Method B". Two sets of six parallel lines 2mm apart shall be cut with a razor blade to intersect at right angles thus forming a grid of 25 squares. The cuts shall be made just deep enough to go through the coating, but not into the substrate. Brush the grid area lightly with a soft brush, and then place a piece of tape over the grid. Rub the tape firmly with the eraser of a pencil to ensure good contact. Remove the tape by rapidly pulling it back upon itself as close to an angle of 180° as possible.

8.4.3 Acceptance Level

A 4B rating or better (ninety five percent or more of the grid area shall show finish intact.

8.5 Paint Hardness Test

8.5.1 Purpose of Test

The paint hardness test is used to determine the resistance of the coatings to scratches.

8.5.2 Test Procedure

This test is based on ASTM D3363-0 "Standard Test Method for Film Hardness by Pencil Test1". Using one of the samples described in section 10.1.2, perform the following test.

Clip a corner of the sample at 45° exposing a raw metal edge. Place the sample on a raw metal base plate so that the exposed metal edge of the

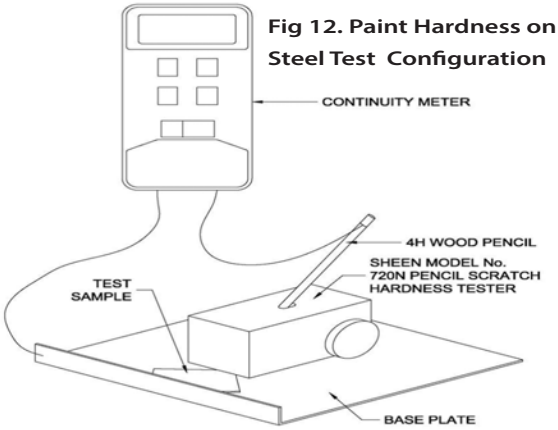

Fig 12. Paint Hardness on Steel Test Configuration

sample makes contact with the turned up side of the base plate (see Figure 12).
Remove approximately 6mm of wood from a 4H pencil, being careful to leave an undisturbed smooth cylinder of lead. Holding the pencil at an angle of 90° to an abrasive paper, rub the lead against the paper maintaining an exact angle of 90° until a flat smooth and circular cross section is obtained. On the other end of the pencil remove

Fig 13. 4H Pencil Configuration

approximately 13mm of wood from one half of the pencil (see Figure 13). Install the pencil into a Sheen model 720N Pencil Scratch Hardness Tester. Connect a continuity meter to the base plate and to the top of the pencil, being sure to make good contact with the exposed portion of the lead.

Following the manufacturers instructions place the tester on the surface of the test sample and push it forward approximately13mm. Rotate the pencil 90° in the holder and repeat the test to one side of the first test. Repeat this two more times for a total of four tests, each with a different quadrant of the pencil lead.

8.5.3 Acceptance Level

The paint finish shall withstand the abrasion of

© SEFA - 5th Edition Desk Reference - Version 3.0

a 4H pencil without penetrating through to the substrate and completing a continuous circuit.

8.6 Dart Impact Test

Not Applicable to Metal Casework.

8.7 Edge Delaminating Test

Not Applicable to Metal Casework.

8.8 Edge Impact Test

Not Applicable to Metal Casework.

8.9 Wear Resistance (Abrasion) Test

Not Applicable to Metal Casework.

9.0 Wall, Counter Mounted, and Tall Units

9.1 Description of Test Cabinet

Evaluation shall be conducted on a wall mounted cabinet with nominal dimensions as follows: 48" (1,219.2mm) +/- 1" wide, 30" (762mm) +/- 1" high, and 12" (304.8mm) +/- 1" deep. The wall cabinet shall be manufactured to manufacturers' standard construction and practices. The wall cabinet shall have two (2) doors and two (2) shelves. Shelves shall be evaluated per Section 7.0 (Shelving). The unit and shelves shall be mounted in a manner recommended by the manufacturer. A visual examination shall be conducted to verify that the configuration and installation comply with these

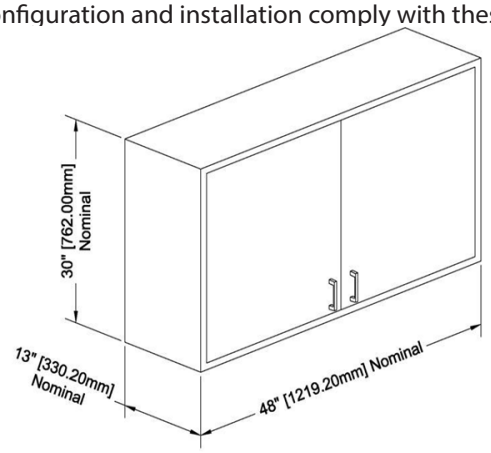

Fig 13. Wall Mounted Cabinet Description of Test Cabinet

conditions. Discontinue evaluation if unit is not in compliance or if malfunction is noted.

9.2 Wall Cabinet Load Test

9.2.1 Purpose of Test

The wall mounted load test will demonstrate the strength of the back of the wall cabinet as well as the joinery of the cabinet and function of doors when the unit is subjected to loads normally expected for laboratory furniture.

9.2.2 Test Procedure

The unit and shelves shall be mounted to a wall in a manner recommended by the manufacturer. Using sand or shot bags weighing 10 pounds (4.55 Kg) each, load cabinet bottom, each shelf, and top uniformly with 40 pounds (18.18 Kg) per square foot to a maximum of 200 pounds (90.91 Kg) each. Maximum load to any cabinet shall not exceed 600 pounds (272.73 Kg) with the total load being distributed as 200 pounds (72.57 Kg) on the bottom, 160 pounds (72.57 KG) on the top and 140 pounds (53.50 Kg) per shelf (2 shelves required). Test to be performed with doors closed.

9.2.3 Acceptance Level

With weights in place, after a period of 24 hours, operate doors through full travel to verify normal operation of doors. Remove weights and operate doors to verify normal operation. Verify that there is no significant permanent deflection of cabinet top, cabinet back, cabinet bottom, or shelves. After weights are removed, the cabinet shall show no permanent damage to the cabinet, cabinet bottom, or shelves.

10.0 Tables

10.1 Description of Test Unit

The table for evaluation shall be a standing height, four legged, freestanding table frame. The table frame shall be nominally 60" +/- 1" (1,524mm) long , 24" +/- 1" (609.6mm) deep, and 36" +/- 1",

(914.4mm) high (see Figure 15). Leg and apron size and construction shall be to manufacturer's specification. A top of 1" (25.4mm) thick 37 - 50 pcf medium density fiberboard shall be supplied and mounted on the table by the testing agency in a manner recommended by the manufacturer. The top dimensions will be such that it will overhang the cabinet perimeter by 1". Its weight shall be included in the test as live load.

Fig 15. Description of Test Table

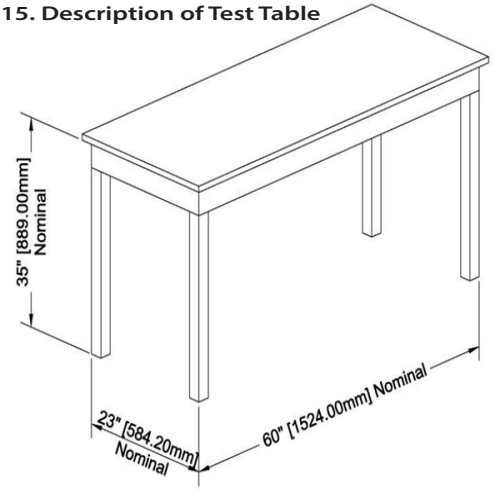

A very large range of styles and designs can represent tables frames. Products inclusive in this section of testing are: Free Standing Tables, Desks, Aprons mounted between two fixed areas such as a wall or Casework, Mobile Tables (Free Standing Tables on wheels or casters), Mobile Under Counter Units, Mobile Workstations, Adjustable Tables, Modular Tables, C-Frame Tables, L-Frame Tables, J-Frame Tables, and Tables for systems furniture. These table systems can all be classified as one of three types of tables; Fixed, Free Standing, and mobile. See Figure 15.

10.2 Table Static Load

10.2.1 Purpose of Test

This test will challenge the table components to loads that are used in the laboratory**.**

10.2.2 Test Procedure

Load the table top by using solid steel bars (per Section 3.1), each weighing 50 pounds (22.68 Kg),

Fig 16. Table Static Test Configuration

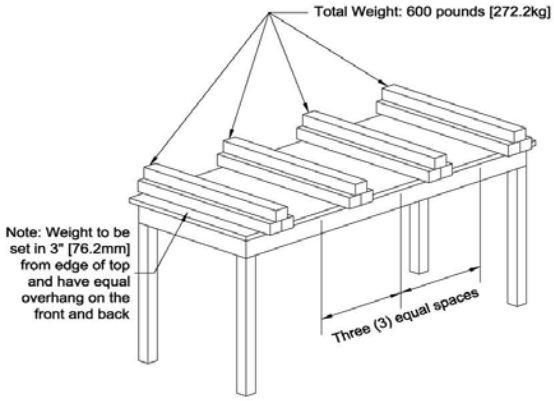

stacked evenly and spaced per Figure 16. These evenly distributed loads should be no less than 600 pounds (272.16 Kg) for free standing tables. Include the weight of the working surface as live load.

10.2.3 Acceptance Level

No structural breakage shall result from application of the load. With the full load, the apron rails shall not deflect more than 1/360 of the span of the table and not to exceed 1/8" (3.175mm). In the case of a table with a drawer, the deflection of the rail shall not interfere with the function of the drawer. After the load is removed, inspect the table for structural damage.

10.3 Table Racking

10.3.1 Purpose of Test

This test will demonstrate the structural integrity of the table construction when subjected to a racking load. Most racking failures occur upon dragging an unloaded table across a floor. The ability of a table to resist a racking load will indicate less damage to the structure. The following tests were based on and adapted from ANSI/BIFMA X5.5-1989 American National Standard for Office Furnishings "Desk Products-Tests." Adjustments have been made to better accommodate the specific applications of tables used in laboratories.

© SEFA - 5th Edition Desk Reference - Version 3.0

Fig 17. Table Racking Test Configuration

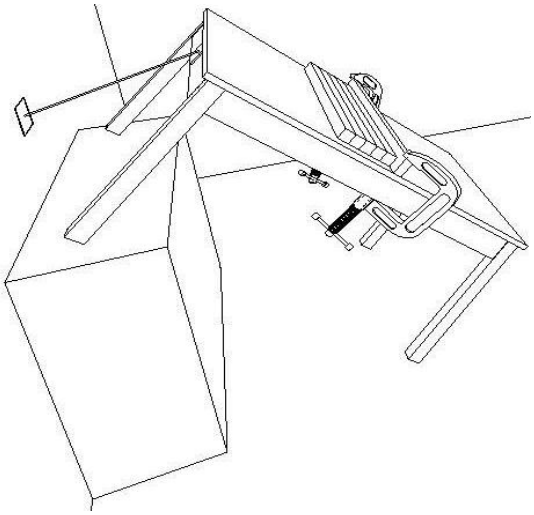

10.3.2 Test Procedure

The table shall have a common two-by-four wood rail clamped on the centerline of the top parallel to the ends of the table. The table shall then be positioned at 45°, with one pair of legs on the floor and the other raised and supported (see Figure 17). To prevent the table from tipping over, attach a cable to the end rail of the table and to the wall. The attachment of the cable at the wall must be equal to or less than the height of the attachment at the table. The table shall then have 250 pounds (113.398 Kg) of weight (five 50-pound (22.679 Kg) bars) placed on its top and held in place by the two-by-four wood rail. The unit shall remain in this position for seventy-two hours. The unit shall be lowered without shock to the leveled surface and the general operation of the drawers shall be evaluated.

10.3.3 Acceptance Level

When returned to normal position, the operation of the table shall be normal, and there will be no permanent damage.

Endnotes

1This format has been adapted from the BIFMA American National Standard format, X5.5 - 1989.

2Ibid. p 8.

3Ibid. pp 10-26.

4The Concise American Heritage Dictionary, (Boston: Houghton Mifflin Company, 1969), p. 38.

5Architectural Woodwork Institute, Architectural Woodwork Quality Standards Illustrated, 7th Edition Version 1.0, 1997, p A-563.

6E. Paul DeGarmo, Materials and Process in Manufacturing, 5th Edition, (New York: MacMillan Publishing Co., Inc.1979), p 423.

7A. Merriam-Webster, Webster's Ninth New Collegiate Dictionary, (Massachusetts: Merriam-Webster Inc. 1988), p 381.

8U.S. Forest Products Laboratory, Wood Engineering Handbook, (New Jersey: Prentice-Hall, Inc. 1974), p 23-6. 9Architectural Woodwork Quality Standards Illustrated, 7th Edition Version 1.0, p 38.

9Wood Engineering Handbook, p 23-7.

10BIFMA, American National Standard for Office Furnishings, (ANSI/BIFMA X5.5-1983), p 8-9.

11Webster's Ninth New Collegiate Dictionary, 1988, p 980.

12Metals Handbook Committee, Metals Handbook, 8th Edition,Vol.1 "Properties and Selection of Metals" (Ohio: American Society for Metals, 1969), p 408

LABORATORY FURNITURE
CERTIFICATE OF PERFORMANCE

_____ certifies that its laboratory furniture identified as
(Company Name)

_____ , has been tested in conformance with the full requirements
(Test Unit)

of the **SEFA 8-M-2020 Recommended Practices**. Testing was performed by a SEFA-approved Independent Third Party Test Lab with results noted below.

Full documentation of the test results is available upon request in a bound report that includes a detailed description of the test unit and procedures, witnesses results and appropriate drawings or photographs of the test unit and procedures.

TEST	TEST RESULTS PASS/FAIL	TEST	TEST RESULTS PASS / FAIL	TEST	TEST RESULTS PASS / FAIL
4.2		6.2		8.2	
4.3		6.3		8.3	
4.4		6.4		8.4	
5.1	@200 lbs.	6.5	@ 100 lbs.	8.5	
5.2		6.5	@ 150 lbs.	9.2	
5.3		7.2	Deflection Measured	10.2	
6.1		8.1	*See Attached Form*	10.3	

COMPANY INFORMATION	TEST SUPERVISOR INFORMATION
Name:	Name:
Address:	Title:
	Signature:
Telephone:	**COMPANY OFFICER INFORMATION**
Fax:	Name:
	Title:
Date:	Signature:

© SEFA - 5th Edition Desk Reference - Version 3.0

CHEMICAL RESISTANCE TESTING – 8-M-2020

Date of Test: _____ Sample Description: _____

Type of Material Coated: _____ Coating Type: _____

Rating Scale: Level 0 – No Detectable Change
Level 1 – Slight Change in Color or Gloss
Level 2 – Slight Surface Etching or Severe Staining
Level 3 – Pitting, Cratering, Swelling, Erosion of Coating, Obvious and Significant Deterioration

Test No.	Chemical Reagent	Rating	Comments
1.	Acetate, Amyl		
2.	Acetate, Ethyl		
3.	Acetic Acid, 98%		
4.	Acetone		
5.	Acid Dichromate, 5%		
6.	Alcohol, Butyl		
7.	Alcohol, Ethyl		
8.	Alcohol, Methyl		
9.	Ammonium Hydroxide, 28%		
10.	Benzene*		
11.	Carbon Tetrachloride		
12.	Chloroform		
13.	Chromic Acid, 60%		
14.	Cresol		
15.	Dichloroacetic Acid		
16.	Dimethylformamide		
17.	Dioxane		
18.	Ethyl Ether		
19.	Formaldehyde, 37%		
20.	Formic Acid, 90%		
21.	Furfural		
22.	Gasoline		
23.	Hydrochloric Acid, 37%		
24.	Hydrofluoric Acid, 48%		
25.	Hydrogen Peroxide, 30%		
26.	Iodine, Tincture of		
27.	Methyl Ethyl Ketone		
28.	Methylene Chloride		
29.	Mono Chlorobenzene*		
30.	Naphthalene		
31.	Nitric Acid, 20%		
32.	Nitric Acid, 30%		
33.	Nitric Acid, 70%		
34.	Phenol, 90%		
35.	Phosphoric Acid, 85%		
36.	Silver Nitrate Saturated		
37.	Sodium Hydroxide 10%		
38.	Sodium Hydroxide 20%		
39.	Sodium Hydroxide 40%		
40.	Sodium Hydroxide Flake		
41.	Sodium Sulfide Saturated		
42.	Sulfuric Acid, 33%		
43.	Sulfuric Acid, 77%		
44.	Sulfuric Acid, 96%		
45.	Sulfuric Acid 77%& Nitric Acid 70% equal parts		
46.	Toluene		
47.	Trichloroethylene		
48.	Xylene		
49.	Zinc Chloride, Saturated		

*IF THE USE OF THIS CHEMICAL IS PERMITTED BY LAW IN THE COUNTRY WHERE THE TESTING IS BEING PERFORMED.

TEST PERFORMED BY: _____ DATE: _____

Scientific Equipment & Furniture Association
Recommended Practices

SEFA 8PH-2020
Laboratory Grade Phenolic Casework

SEFA World Headquarters
65 Hilton Avenue
Garden City, NY 11530

Tel: 516-294-5424
www.sefalabs.com

SEFA SPELLS SAFE

Table Of Contents

	Page
Committee Members	**279**
Foreword	**280**
Sections	
1.0 Scope	**281**
2.0 Purpose	**281**
3.0 Definitions	**281**
3.1 Description of Testing Apparatus	
4.0 Base Cabinets	**284**
4.1 Description of Test Unit	
4.2 Cabinet Load Test	
4.2.1 Purpose of Test	
4.2.2 Test Procedure	
4.2.3 Acceptance Level	
4.3 Cabinet Concentrated Load Test	
4.3.1 Purpose of Test	
4.3.2 Test Procedure	
4.3.3 Acceptance Level	
4.4 Cabinet Torsion	
4.4.1 Purpose of Test	
4.4.2 Test Procedure	
4.4.3 Acceptance Level	
4.5 Cabinet Submersion Test	
4.5.1 Purpose of Test	
4.5.2 Test Procedure	
4.5.3 Acceptance Level	
4.6 Spill Containment Test	
Not applicable to Phenolic Casework	
5.0 Doors	**286**
5.1 Door Hinge Test	
5.1.1 Purpose of Test	
5.1.2 Test Procedure	
5.1.3 Acceptance Level	
5.2 Door Impact Test	
Not applicable to Phenolic Casework	
5.3 Door Cycle Test	
5.3.1 Purpose of Test	
5.3.2 Test Procedure	
5.3.3 Acceptance Level	
6.0 Drawers	**287**
6.1 Drawer Static Test	
6.1.1 Purpose of Test	
6.1.2 Test Procedure	
6.1.3 Acceptance Level	
6.2 Drawer and Door Pull Test	
Not applicable to Phenolic Casework	
6.3 Drawer Impact Test	
6.3.1 Purpose of Test	
6.3.2 Test Procedure	
6.3.3 Acceptance Level	
6.4 Drawer Internal Impact Test	
6.4.1 Purpose of Test	
6.4.2 Test Procedure	
6.4.3 Acceptance Level	
6.5 Drawer Cycle Test	
6.5.1 Purpose of Test	
6.5.2 Test Procedure	
6.5.3 Acceptance Level	
7.0 Shelving	**289**
7.1 Description of Test Unit	
7.2 Shelf Load Test	
7.2.1 Purpose of Test	
7.2.2 Test Procedure	
7.2.3 Acceptance Level	
8.0 Cabinet Surface Finish Tests	**289**
8.1 Chemical Spot Test	
8.1.1 Purpose of Test	
8.1.2 Test Procedure	
8.1.3 Acceptance Leve	

Table Of Contents (cont'd)

Page

8.2 Hot Water Test
8.2.1 Purpose of Test
8.2.2 Test Procedure
8.2.3 Acceptance Level

8.3 Impact Test
Not applicable to Phenolic Casework

8.4 Paint Adhesion Test
Not applicable to Phenolic Casework

8.5 Paint Hardness Test
Not applicable to Phenolic Casework

8.6 Dart Impact Test
Not applicable to Phenolic Casework

8.7 Edge Delaminating Test
Not applicable to Phenolic Casework

8.8 Edge Impact Test
Not applicable to Phenolic Casework

8.9 Wear Resistance (Abrasion) Test
Not applicable to Phenolic Casework

Page

9.0 Wall Cabinets, Counter Mounted and Tall Units **291**

9.1 Description of Test Unit

9.2 Load Test
9.2.1 Purpose of Test
9.2.2 Test Procedure
9.2.3 Acceptance Level

10.0 Tables
Not applicable to Phenolic Casework

Forms **292**

© SEFA - 5th Edition Desk Reference - Version 3.0

SEFA 8-PH COMMITTEE MEMBERS

Committee Chair

Arnulf Penker, Fundermax, GmbH

C. L. Andrews

ICI Scientific

TFI Inline Design, Inc.,

Trespa, BV

Foreword

SEFA Profile

The Scientific Equipment and Furniture Association (SEFA) is an international trade association comprised of manufacturers of laboratory furniture, casework, fume hoods and members of the design and installation professions. The Association was founded to promote this rapidly expanding industry and improve the quality, safety and timely completion of laboratory facilities in accordance with customer requirements.

SEFA Recommended Practices

SEFA and its committees are active in the development and promotion of Recommended Practices having domestic and international applications. Recommended Practices are developed by the association taking into account the work of other standard writing organizations. Liaison is also maintained with government agencies in the development of their specifications.

SEFA's Recommended Practices are developed in and for the public interest. These practices are designed to promote a better understanding between designers, architects, manufacturers, purchasers, and end-users and to assist the purchaser in selecting and specifying the proper product to meet the user's particular needs. SEFA's Recommended Practices are periodically updated. The Recommended Practices are numbered to include an annual suffix which reflects the year that they were updated. SEFA encourages architects to specify these Recommended Practices as follows: "SEFA 8PH-2020".

SEFA Glossary of Terms

SEFA has developed a Glossary of Terms (SEFA 4-2020) for the purpose of promoting a greater understanding between designers, architects, manufacturers, purchasers and end users. The terms defined by SEFA are frequently used in contracts and other documents, which attempt to define the products to be furnished or the work involved. The Association has approved this Glossary in an effort to provide uniformity among those who use these terms. Where a specific Recommended Practice contains definitions which differ from those in the Glossary of Terms, then the definitions in the specific Recommended Practice should be used.

SEFA encourages all interested parties to submit additional terms or to suggest any changes to those terms already defined by the Association. The definitions should be used to help resolve any disputes that may arise or to incorporate the applicable terms in any contract or related documents.

SEFA Disclaimer

SEFA uses its best effort to promulgate Recommended Practices for the benefit of the public in light of available information and accepted industry practices. SEFA does not guarantee, certify or assure the safety or performance of any products, components, or systems tested, installed, or operated in accordance with SEFA Recommended Practices or that any tests conducted under its Recommended Practices will be non-hazardous or free from risk. SEFA encourages the use of third party independent testing where appropriate.

Note : ***Testing as described in this document must be performed and documented by a SEFA-approved third party testing facility. See Page 36 of the SEFA Desk Reference 5th Edition Version 3.0, or visit us at SEFALABS.COM for the most current list of SEFA-approved test labs.***

© SEFA - 5th Edition Desk Reference - Version 3.0

1.0 Scope

The scope of this document is intended to provide manufactures, specifiers, and users tools for evaluating the safety, durability, and structural integrity of phenolic laboratory grade furniture and complimentary items. This document is inclusive of casework (base units, wall mounted units, counter mounted units, tall units, tables and, shelving systems). Casework and shelving manufactured for laboratory use should be subjected to the tests and procedures outlined below.

Phenolic laboratory grade casework shall consist of base cabinets, wall cabinets, counter mounted cabinets, tall cabinets, and shelving.

Aggregate test results may vary by manufacturer. Procedures for testing performance criteria shall be as outlined in this document and results made available upon request. It is assumed that the test model reflects the performance criteria for all products. However there may be certain door/ drawer configurations and/or sizes outside the test unit configuration identified that may not meet certain parts of this test. A test unit has been identified in this document with the sole purpose of obtaining continuity of procedures and results in a scientific format.

Great care should be exercised when heavy loads are applied to the cabinet and appropriate safety precautions taken to insure safety of testing personnel. Properly trained personnel should perform all tests. SEFA assumes no liability for damage or injury as a result of conducting these tests.

The acceptance levels are based on the cumulative field experience and laboratory testing of SEFA members based on actual needs of laboratories. This is a performance- based document. Specifications proscribing specific materials, hardware, finishes, workmanship or construction may or may not meet acceptance levels of this document. If proscriptive components of the specifications conflict with compliance of this document then the Architectural proscribed elements take precedent.

Testing as outlined in this document must be performed and documented by a SEFA-approved independent third party testing facility.

2.0 Purpose

The purpose of this document is to describe the distinguishing performance characteristics of solid phenolic core laboratory grade furniture and complimentary items. Furniture shall be of a type specifically designed and manufactured for installation and use in a laboratory.

Although aggregate test results may vary from manufacturer to manufacturer, procedures for testing performance criteria shall be as outlined in this document and results made available upon request. It is assumed that the test model reflects the performance criteria for all products regardless of construction, size, or style used. A test unit has been identified in this document with the sole purpose of obtaining continuity for procedures and results in a scientific format.

3.0 Definitions

Acceptance Levels - The acceptance level for each performance criteria is based on the cumulative experience of actual field testing and laboratory results of SEFA members. Acceptance levels describe the expected outcome of each test procedure.

ANSI/BIFMA - ANSI is the American National Standards Institute. Approval of an American National Standard requires verification by ANSI that the requirements for due process, consensus, and other criteria for approval have been met by the standards developer. BIFMA is the Business and Institutional Furniture Manufacturer's Association, an association of manufacturers of desk products and the like.

Apparatus - A machine or group of machines and accessories.

Arithmetic Mean - A number obtained by dividing the sum of a set of quantities by the number of quantities in a set; average.

ASTM - American Society for Testing and Materials.

Base Cabinets - A base cabinet is a storage device consisting of two ends, a back, a face and may or may not include a top or top frame. The face may be open, to access the storage area, or may be outfitted with one or more drawers and/or doors. A base cabinet is always placed on the floor and normally supports a surface. The top sur-face is normally no more than 42" (1,067mm) off the floor surface.

Best Practices - When given a choice of grade, the "best practice" is to select one that offers a well defined degree of control over the quality of workmanship, materials, and installation of a project. SEFA-8 Recommended Practices are written from a view of high quality laboratory furniture.

Cabinet Depth (Deep) - Given a front, bottom, two sides, and a top, the cabinet depth is a measure of the side of the cabinet, in its normal upright position, from the outside back to the outside front excluding doors and door fronts.

Cabinet Height (High) - Given a front, bottom, two sides, and a top, the cabinet height is a measure of the side of the cabinet, in its normal upright position, from the bottom edge of the side to the top, excluding any surface.

Cabinet Width (Wide) - Given a front, bottom, two sides, and a top, the cabinet width is a measure of the front of the cabinet in its normal upright position from one side to the other.

Casework - Base and wall cabinets, display fixtures, and storage shelves. The generic term for both "boxes" and special desks, reception counters, nurses stations and the like. Generally includes the tops and work surfaces.

Chase (Plumbing Area) - Space located behind the back of the base cabinet used to house plumbing or electric lines.

Combination Unit - A base unit of the type that has both door(s) and drawer(s).

Counter Mounted Cabinet - A counter mounted cabinet is a wall cabinet (usually with a height of approximately 48" [1,219mm] and is typically mounted on the work surface or shelf, as in a reagent shelf).

Cupboard (Door Unit) - That portion of the cabinet with no drawer(s) that may be enclosed by doors.

Drawer - A sliding storage box or receptacle opened by pulling out and closed by pushing in.

Free Standing - Requiring no support or fastening to other structures.

Hardware - Items such as screws, pulls, hinges, latches, locks, and drawer slides used in the construction of casework.

Joinery – The junction of two pieces intended to be permanently connected.

Laboratory Furniture - Furniture designed and manufactured for installation and use in a laboratory.

Latch - A piece of hardware designed to hold a door closed.

Leveling Screws (Levelers) - Threaded components designed to allow adjustment of the cabinet vertically as needed for leveling.

Nominal Dimensions - Not all cabinet manufacturers produce product to the identical dimensions. All dimensions given in this document are accurate to within five percent, which is considered nominal.

Permanent Damage - Destruction to material or joinery that would require repair in order to return to its original state.

Permanent Deformation - Deflection that has exceeded the limits of the product, thus changing the original shape of the product

Permanent Deterioration - Erosion or corrosion of material such that the component will never return to its original shape.

© SEFA - 5th Edition Desk Reference - Version 3.0

Permanent Failure - See "permanent damage."

Pulls - Articles of hardware used to grasp and open/close the door or drawer (see also hardware).

Rack Resistance - The ability of a product to resist stresses that tend to make the product distort and the drawers to become misaligned.

Rail - A horizontal member extending from one side of the cabinet to the other.

Reagent - A substance used because of its chemical or biological activity.

Removable Back - A panel located on the inside back of the base cabinet, which is removable in order to gain access to utilities.

Solid Phenolic Composite - Solid phenolic composite tops are a compression molded composite of a homogeneous core of organic fiber reinforced phenolic and may contain one or more integrally cured surfaces that are non-porous.

Submersion - Covered with water.

Tables - An article of furniture having a flat, horizontal surface supported by one or more support members (legs), and a frame (apron).

Tall Cabinet (Full Height Unit) - A tall cabinet is a storage device that consists of two ends, a top and bottom panel, a back and a face. The face may be open to access the storage area or may be outfitted with one or more drawers and/or door(s). A tall cabinet is always placed on the floor and is nominally 84" (2,134mm) high.

Torsion – A force acting at a distance which tends to twist or rotate an object or cabinet.

Uniformly Distributed – A force applied evenly over the area of a surface.

Unobstructed Entry - A cabinet is deemed to be unobstructed if access to the entire storage area is completely without obstacle.

Upright Position - A cabinet oriented in its intended position.

Wall Cabinet - A wall cabinet is a storage device consisting of two ends, a back, a top, bottom, and a face. The face may be open to access the storage area or may be outfitted with one or more door(s). The wall cabinet usually does not include a drawer. A wall cabinet is always mounted on a vertical surface such as a wall, a divider, panel or some other vertical structure. A wall cabinet is usually less than 48" (1,219mm) high.

Work Surface - A normally horizontal surface used to support apparatus at a convenient height above the floor. Work surfaces are normally positioned atop a base cabinet or table structure.

3.1 Description of Testing Apparatus

Solid Steel Bar - A square solid steel bar 2 1/2" (63mm) square, 28 1/4" (717mm) long, weighing 50 pounds (22.679 Kg).

Sand or Shot Bag (10 pounds [4.545 Kg]) - A bag of plastic or cloth with the approximate dimensions 10 9/16" (268mm) x 11" (279mm) as in typical "gallon size re-closable stor-age bags." Filled with enough sand or shot so that contents weigh 10 pounds (4.545 Kg).

Sand Bag (20 pounds [9.071 Kg]) - Two 10 pound (4.545 Kg) sand bags bound together.

Shot Bag (100 lbs. [45.359 Kg]) - A plastic or cloth bag of sufficient size to contain 100 pounds (45.359 Kg) of shot.

Cycling Mechanism - Per ANSI BHMA 156.9.-2003

Steel Rod - A 2" (51mm) diameter by 12" (305mm) long rod, approximately 10 pounds (4.535 Kg) in weight.

Hot Water - To be considered "hot water," the temperature of the water must be between 190° F to 205° F (88° C to 96° C).

One Pound Ball - Solid steel sphere approximately 2" (51mm) in diameter.

4.0 Base Cabinets

4.1 Description of Test Cabinet

The base cabinet shall be a combination of cupboard and drawer per Figure 1. The base cabinet shall be 48" +/- 1" (1219.2mm +/- 25.4mm) wide, 36" +/-1" (914.4mm +/- 25.4)mm high, and 22" +/-1" (558 mm+/- 25.4mm) deep. Cabinet dimensions do not include drawer or door front thickness. The drawer shall be above the cupboard, full width and approximately one-fourth the height of the cabinet's face opening. Drawer shall be a minimum of 18" (457.2mm) deep outside dimension. When slides are used for drawers, slides shall be a minimum of 18" (457.2mm) deep. Cupboard shall be double-door design and provide unobstructed entry into the cabinet interior with the doors open. The unit shall contain one adjustable shelf.

The cabinet back shall be the removable type (per manufactures standard design as used for access to the plumbing or chase area) with the removable panel removed. Removable panel to be a minimum 36"x18" (914.4mm x 457.2mm). The cabinet shall have full height end panels with integral toeboard. The cabinet shall be free standing, squared and sitting 1" (25.4mm) off the floor atop four hardwood corner blocks 2" (50.8mm) square and 1" (25.4mm) high. A top of 1" (25.4mm) thick 37-50 pcf medium density fiberboard shall be positioned on the cabinet without glue or fasteners of any kind. The top dimensions will be such that it will overhang the cabinet perimeter by 1" (25.4mm).

Before conducting the test, a visual examination shall be conducted to verify that the unit configuration and setup conditions are appropriate. Operate doors and drawer. Doors should be free moving and latch properly. Inspect the unit for dimensions and note the fit of doors and drawers to the cabinet body. Open and close the drawer. The drawer should be free moving and function as specified by the manufacturer. Discontinue evaluation if unit is not in compliance or if malfunction is noted.
Although aggregate test results may vary from manufacturer to manufacturer, procedures for

Fig. 1 - Description of Base Cabinet

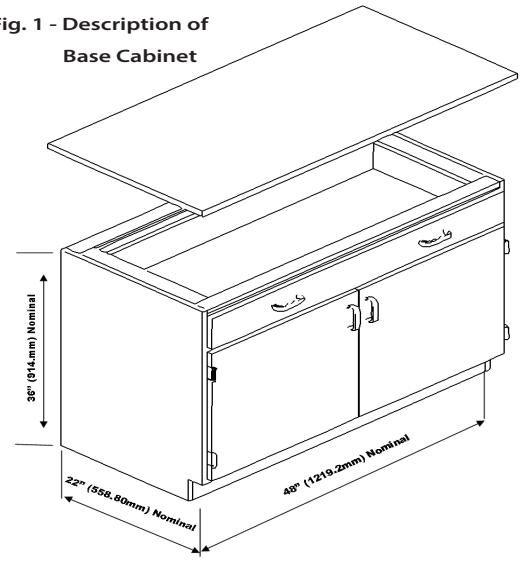

testing performance criteria shall be as outlined in this document and results made available upon request. It is assumed that the test model reflects the performance criteria for all products regardless of construction, size, or style used. A test unit has been identified in this document with the sole purpose of obtaining continuity of procedures and results in a scientific format.

4.2 Cabinet Load Test -

4.2.1 Purpose of Test

The cabinet load test will challenge the structural integrity and load bearing capability of the cabinet construction. This test will demonstrate the ability of the cabinet to support heavy applied loads. This is not intended to test the functional characteristics of the cabinet under heavy loads.

4.2.2 Test Procedure

Verify that the cabinet is level. Remove drawer and open doors for testing purpose. Load the cabinet top by using 2000 pounds (907.184 Kg) of solid steel bars (per Section 3.1) stacked four high and spaced per Figure 2. After 24 hours, unload the cabinet.

4.2.3 Acceptance Level - The cabinet will have no permanent failure.

© SEFA - 5th Edition Desk Reference - Version 3.0

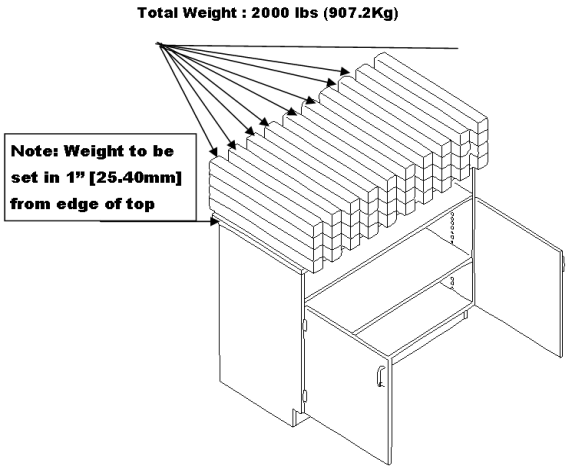

4.3 Cabinet Concentrated Load Test

4.3.1 Purpose of Test

The purpose of this test is to challenge the functional characteristics of the cabinet when subjected to a concentrated load on the center of the cabinet top.

4.3.2 Test Procedure

Using solid weights or 10 pound (4.535 Kg) sand bags (per Section 3.1), apply a total of 200 pounds (90.718 Kg) to the top of the cabinet along the cabinet centerline (see Figure 3). Operate doors and drawers.

4.3.3 Acceptance Level

Door and drawer operation shall be normal under condition of test load. There shall be no signs of permanent deformation to front rail, cabinet joinery, doors, or drawers.

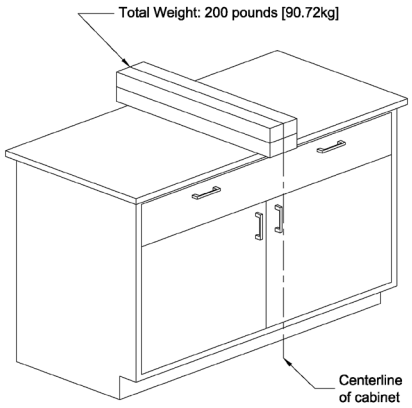

Figure 3. Base Cabinet Concentrated Load Test

4.4 Cabinet Torsion

4.4.1 Purpose of Test

This test will evaluate the structural integrity of the cabinet construction when subjected to a torsional load.

4.4.2 Test Procedure

Measure the diagonal corners and record them as the pre-load baseline reference. The cabinet shall be supported on all four corners with four inch square blocks located not more than 6 inches (152.4mm) in from each corner. Load the rear corner seven inches in from the corner at a 45 degree angle with 350 lbs. (158.757 Kg). Load the front corner seven inches in from the corner at a 45 degree angle with 200 lbs. (90.718 Kg). Carefully pick up the cabinet with a lift truck or similar device just off of the blocks and then remove the front left block under the 200 lbs. (90.718 Kg) and then resettle the cabinet on the remaining 3 blocks for a period of 24 hrs. After the 24 hr. period, repeat the last 3 steps in reverse order. After the unit has the load removed, the unit shall to be re-measured on the same diagonal measurements with the difference recorded.

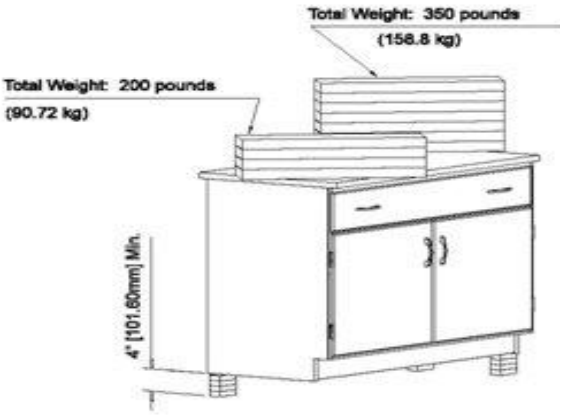

Figure 4. Base Cabinet Torsion Test Procedure.

4.4.3 Acceptance Level

When returned to normal position, the operation of the cabinet shall be normal, and there will be no permanent damage. The difference between

the two measurements taken from measuring the diagonal corners shall be no more than 1/8" (3.175mm).

4.5 Cabinet Submersion Test

4.5.1 Purpose of Test

This test will demonstrate the ability of a cabinet to resist wicking of moisture from the floor. Only units that rest on the floor or a unit where the base is within 2" (50.8mm) of the floor should be subjected to this test.

4.5.2 Test Procedure

The material thickness along the perimeter of the cabinet shall be measured on 6" (152.4mm) increments. Record the thickness of the material to be submerged in water. Calculate the arithmetic mean of the data taken. Place the entire test cabinet in its upright position such that the cabinet is submerged in a pan filled with 2" (50.8mm) of water. After 4 hours, remove the unit from the water and immediately measure the thickness of the material at the same points measured initially. Calculate the new arithmetic mean. After the unit has been allowed to dry, inspect for other damage.

4.5.3 Acceptance Level

The cabinet will show no permanent deformation or deterioration. Increase in thickness shall not exceed ten percent of the initial mean measurements.

4.6 Spill Containment Test

Not applicable to Phenolic Casework

5.0 Doors

5.1 Door Hinge Test

5.1.1 Purpose of Test

This test will demonstrate the durability of the door, door attachment and its hardware (hinge leaf, screws, etc.) to an applied load of 200 pounds (90.72 Kg).

5.1.2 Test Procedure

Remove the shelf for this test. With unit and top set as described in Section 4.1, add sufficient weight to the top in order to prevent overturning. With cabinet door opened 90-degrees, hang a sling made up of two 100 pound (45.359 Kg) weights (shot bags or solid weights) over top of the door at a point 12" (304.8mm) out from the hinge centerline (see Figure 5). Slowly move door through two full cycles of the hinge at 160-degree arc. Remove weight and swing door through its full intended range of motion and close door.

5.1.3 Acceptance Level

The open door shall withstand a load of 200

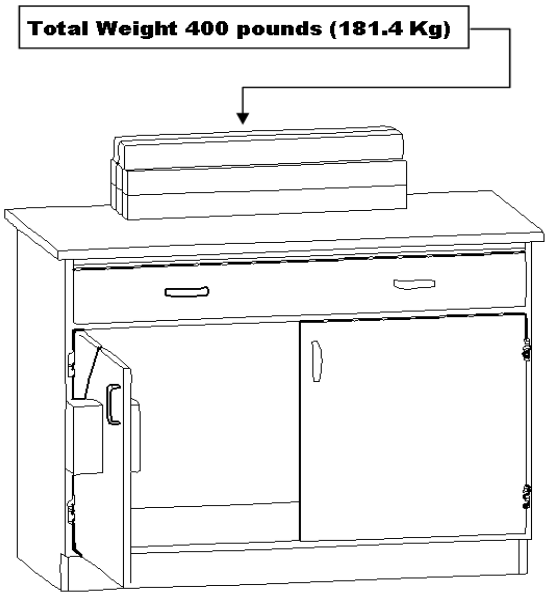

Fig 5 Base Cabinet Door Load Configuration
Note: Load top sufficient to prevent tipping of base cabinet

pounds (90.72 Kg) when applied at a point 12"(304.8mm) from the hinge centerline without permanent damage. Operation of the door, after test shall show no significant permanent damage that will cause binding of the door or hinges or that will adversely affect operation of the catch.

5.2 Door Impact Test

Not Applicable to Phenolic Casework.

© SEFA - 5th Edition Desk Reference - Version 3.0

5.3 Door Cycle Test

5.3.1 Purpose of Test

This test will demonstrate the durability of the door hinge hardware to withstand 100,000 cycles as a reliable measure for longevity).

5.3.2 Test Procedure

Open the door 5 degrees. A cycling mechanism shall be used to operate the door 90 degrees from the 5 degree open position. The door shall operate for 100,000 cycles continuously, without hinge adjustment, at a speed of 15 cycles per minute.

5.3.3 Acceptance Level

Door shall operate for the full cycle period without deterioration that will significantly affect the function of the door. The door shall operate freely without binding.

6.0 Drawers

6.1 Drawer Static Test

6.1.1 Purpose of Test

This test will demonstrate the ability to support a point load given to the front of the drawer and will challenge the drawer suspension system and the attachment of the drawer head to the drawer.

6.1.2 Test Procedure

With unit and top set as described in Section 4.1, add sufficient weight to the top in order to prevent overturning. Open the drawer to 13" (330.2mm) of travel and hang 150 pounds (68.03 Kg) from the drawer head at the centerline of the drawer for five minutes. Remove the weight and operate the drawer through the full cycle.

6.1.3 Acceptance Level

There shall be no interference with the normal operation of the drawer and the drawer head should remain tightly fastened to the drawer.

Fig. 6 Base Cabinet Drawer Static Load Test Configuration

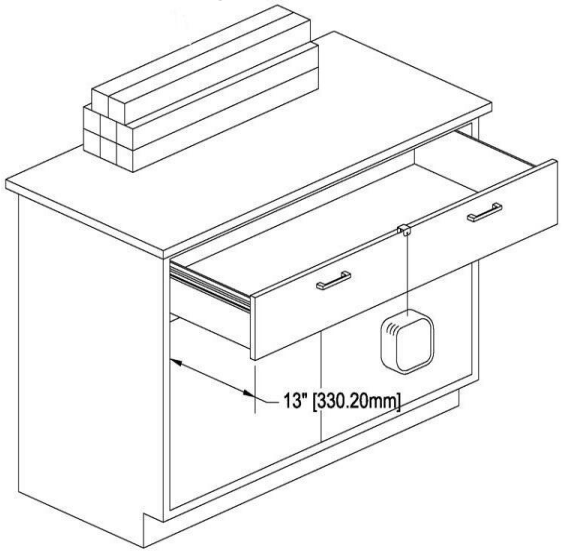

Note: Load top suffcient to prevent tipping of base cabinet. Weight shall be located at the back of the worksurface and centered.

6.2 Drawer and Door Pull Test

Not Applicable to Phenolic Casework.

6.3 Drawer Impact Test

6.3.1 Purpose of Test

This test will demonstrate the resistance to impact of the drawer bottom.

6.3.2 Test Procedure

Remove drawer; support each corner with 2"x2"x1" (50.8 x 50.8 x 25.4 mm) supports. Drop a 10 pound (4.545 Kg) sand or shot bag from a height of 24" (609.6 mm) into the bottom of the drawer at the center of the width of the drawer. Remove the sand or shot bag.

6.3.3 Acceptance Level

No damage or breakout of the drawer bottom.

6.4 Drawer Internal Rolling Impact Test

6.4.1 Purpose of Test

This test will evaluate the strength of the drawer head, bottom, and back as a result of opening and

closing the drawer with a rolling load.

6.4.2 Test Procedure

Position the drawer on a table at a 45-degree angle per Figure 7. Place a 2" (50.8mm) diameter by 12" (304.8mm) long steel rod (approximately 10 pounds [4.545 Kg]) 13" (330.2mm) from the target impact area such that the rod will roll freely to impact the back of the drawer. Subject the back to three impacts and reverse the drawer to subject the front to three additional impacts.

6.4.3 Acceptance Level

The drawer shall show no permanent damage. All joinery shall be intact and the drawer, when replaced in the unit, shall operate normally. Minor scratches and dents are acceptable.

6.5 Drawer Cycle Test

6.5.1 Purpose of Test

This test is intended to test the drawer's operation under full load. To be considered Laboratory Grade Solid Core Phenolic Casework, the mechanical drawer slides must be rated at a minimum, ANSI/BHMA A156.9 Grade 1.

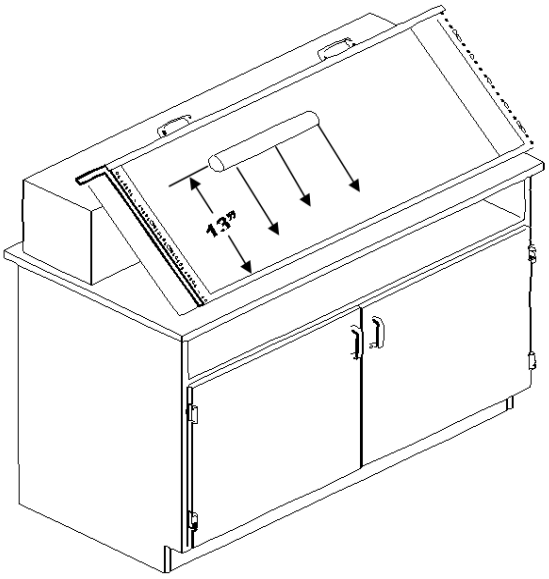

Fig. 7 Base Cabinet Drawer Internal Rolling` Impact Test Configuration

6.5.2 Test Procedure

Mechanical Suspension Systems – A dynamic load of 75 pounds (34.019 Kg) shall be uniformly distributed in the drawer (using ten 7 ½ pound (3.401 Kg) sand or shot bags per Section 3.1). Measure force required to activate the drawer. Operate over the full range of motion without engaging bumpers, stops or self-closing features for 50,000 cycles at a rate not to exceed 8 - 12 cycles per minute.

Fig 8 Drawer Cycling Mechanism Test Configuration

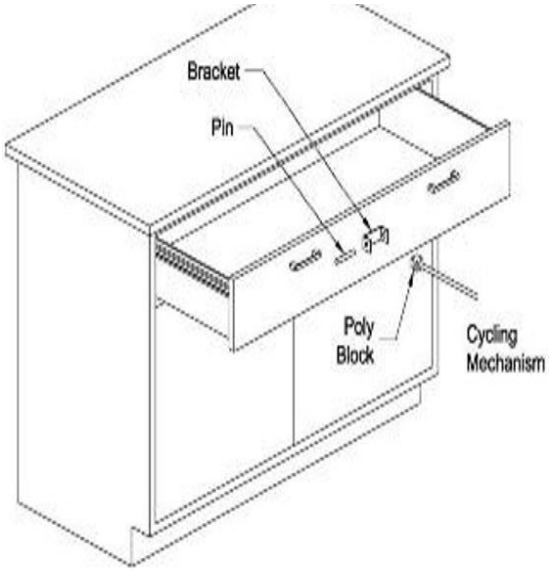

6.5.3 Acceptance Level

The drawer shall operate freely without evidence of binding. The force required to open and close loaded drawer shall not be greater than 8 pounds to activate.*

The American's with Disabilities Act (ADA) requires a force no greater than five pounds to activate hardware. The load rating in this document is intended only for testing conditions where loads challenge the durability of the hardware. Under actual conditions, drawer loading should be reduced to levels that result in compliance with ADA as applicable.

© SEFA - 5th Edition Desk Reference - Version 3.0

7.0 Shelving

7.1 Description of Test Unit

Phenolic shelving shall be tested using the following procedure. The shelves to be tested are as described in section 9.1 "Description of Test Cabinet". Shelves on both base and wall units shall be tested to this section.

7.2 Shelf Load Test

7.2.1 Purpose of Test

This test will demonstrate the ability of a shelf and its mounting hardware to support loads of 40 pounds (18.143 Kg) per square foot, not to exceed 200 pounds (90.718 Kg).

7.2.2 Test Procedure

A shelf shall be mounted in a manner in which it is designed. Measure the distance from the underside of the shelf to a reference point located on the center line of the shelf, 1/2" from the front edge of the shelf. Use shot or sand bags weighing 10 pounds (4.535 Kg) each. Unless otherwise specified, load the shelf uniformly to 40 pounds (18.14 kg) per square foot of shelf area to a maximum of 200 pounds (90.71 Kg). Measure the deflection of the shelf by measuring the distance to the reference point and calculating the difference between the two measurements. Record data and remove the load.

7.2.3 Acceptance Level

Different materials will perform differently to the loads based on the Modulus of Elasticity of the material and the cross section moment of inertia for the shape of the material. Longer shelves will support less loads than shorter shelves. The allowable maximum deflection of a shelf is 1/180 of the span and not in excess of .25" (6.35mm).

8.0 Cabinet Surface Finish Tests

8.1 Chemical Spot Test

Users should consider the chemical and staining agents that might be used near the laboratory casework. Common guidelines can be found by referring to: The casework manufacturer printed data for chemical and stain resistance Because chemical and stain resistance is affected by concentration, time, temperature, humidity, housekeeping and other factors, it is recommended that users test samples in their actual environment with the substances they use.

8.1.1 Purpose of Test

The purpose of the chemical spot test is to evaluate the resistance a finish has to chemical spills.

Note: Many organic solvents are suspected carcinogens, toxic and/or flammable. Great care should be exercised to protect personnel and the environment from exposure to harmful levels of these materials.

8.1.2 Test Procedure

Obtain one sample panel measuring 14" x 24" (355.6mm x 609.6mm). The received sample to be tested for chemical resistance as described herein.

Place panel on a flat surface, clean with soap and water and blot dry. Condition the panel for 48-hours at 73° +/- 3°F (23° +/- 2°C) and 50 +/- 5% relative humidity or the currently accepted guideline set by ASTM. Test the panel for chemicalresistance using forty-nine different chemical reagents by one of the following methods.

Method A - Test volatile chemicals by placing a cotton ball saturated with reagent in the mouth of a 1-oz. (29.574cc) bottle and inverting the bottle on the surface of the panel.

Method B - Test non-volatile chemicals by placing five drops of the reagent on the surface of the panel and covering with a 24mm watch glass, convex side down.

For both of the above methods, leave the reagents on the panel for a period of one hour. Wash off the panel with water, clean with detergent and naptha, and rinse with deionized water. Dry with a towel and evaluate after 24-hours at 73° +/- 3°F (23° +/- 2°C) and 50 +/- 5% relative humidity, or

the currently accepted guideline set by ASTM using the following rating system.

Level 0 - No detectable change.
Level 1 - Slight change in color or gloss.
Level 2 - Slight surface etching or severe staining.
Level 3 - Pitting, cratering, swelling, or erosion of coating. Obvious and significant deterioration.

Note: Percentages are by volume.

8.1.3 Acceptance Level

Range of results is provided to establish the acceptable range for a Laboratory Grade Finish. Results will vary from manufacturer to manufacturer due to differences in finish formulations. Laboratory grade finishes shall result in no more than four (4) Level 3 conditions. Individual test results, for the specified 49 reagents, will be verified with the established third party, independent SEFA 8 test submittal form. Suitability for a given application is dependent upon the chemicals used in a given laboratory.

8.2 Hot Water Test

8.2.1 Purpose of Test

The purpose of this test is to insure the surface is resistant to hot water.

8.2.2 Test Procedure

Hot water (190ºF to 205ºF [88ºC to 96ºC]) shall be allowed to trickle (with a steady stream and at a rate of not less than 6 ounces [177.44cc] per minute) on the finished surface, which shall be set at an angle of 45º, for a period of five minutes.

8.2.3 Acceptance Level

After cooling and wiping dry, the finish shall show no visible effect from the hot water.

8.3 Ball Impact Test

Not Applicable to Phenolic Casework.

Test No.	Chemical Reagent	Test Method
1.	Acetate, Amyl	A
2.	Acetate, Ethyl	A
3.	Acetic Acid, 98%	B
4.	Acetone	A
5.	Acid Dichromate, 5%	B
6.	Alcohol, Butyl	A
7.	Alcohol, Ethyl	A
8.	Alcohol, Methyl	A
9.	Ammonium Hydroxide, 28%	B
10.	Benzene*	A
11.	Carbon Tetrachloride	A
12.	Chloroform	A
13.	Chromic Acid, 60%	B
14.	Cresol	A
15.	Dichloracetic Acid	A
16.	Dimethylformamide	A
17.	Dioxane	A
18.	Ethyl Ether	A
19.	Formaldehyde, 37%	A
20.	Formic Acid, 90%	B
21.	Furfural	A
22.	Gasoline	A
23.	Hydrochloric Acid, 37%	B
24.	Hydrofluoric Acid, 48%	B
25.	Hydrogen Peroxide, 30%	B
26.	Iodine, Tincture of	B
27.	Methyl Ethyl Ketone	A
28.	Methylene Chloride	A
29.	Monochlorobenzene*	A
30.	Naphthalene	A
31.	Nitric Acid, 20%	B
32.	Nitric Acid, 30%	B
33.	Nitric Acid, 70%	B
34.	Phenol, 90%	A
35.	Phosphoric Acid, 85%	B
36.	Silver Nitrate, Saturated	B
37.	Sodium Hydroxide, 10%	B
38.	Sodium Hydroxide, 20%	B
39.	Sodium Hydroxide, 40%	B
40.	Sodium Hydroxide Flake	B
41.	Sodium Sulfide Saturated	B
42.	Sulfuric Acid, 33%	B
43.	Sulfuric Acid, 77%	B
44.	Sulfuric Acid 96%	B
45.	Sulfuric Acid, 77% & Nitric Acid, 70% equal parts	B
46.	Toluene	A
47.	Trichloroethylene	A
48.	Xylene	A
49.	Zinc Chloride, Saturated	B

***If the use of this chemical is permitted by law in the country where the testing is being performed.**

© SEFA - 5th Edition Desk Reference - Version 3.0

8.4 Paint Adhesion Test

Not Applicable to Phenolic Casework.

8.5 Paint Hardness Test

Not Applicable to Phenolic Casework.

8.6 Dart Impact Test

Not Applicable to Phenolic Casework.

8.7 Edge Delaminating Test

Not Applicable to PhenolicCasework.

8.8 Edge Impact Test

Not Applicable to Phenolic Casework.

8.9 Wear Resistance (Abrasion) Test

Not Applicable to Phenolic Casework.

9.0 Wall, Counter Mounted, and Tall Units

9.1 Description of Test Cabinet

Evaluation shall be conducted on a wall mounted cabinet with nominal dimensions as follows: 48" (1,219.2mm) +/- 1" wide, 30" (762mm) +/- 1" high, and 12" (304.8mm) +/- 1" deep. The wall cabinet shall be manufactured to manufacturers' standard construction and practices. The wall cabinet shall have two (2) doors and two (2) shelves. Shelves shall be evaluated per Section 7.0 (Shelving). The unit and shelves shall be mounted in a manner recommended by the manufacturer. A visual examination shall be conducted to verify that the configuration and installation comply with these conditions. Discontinue evaluation if unit is not in compliance or if malfunction is noted.

9.2 Wall Cabinet Load Test

9.2.1 Purpose of Test

The wall mounted load test will demonstrate the strength of the back of the wall cabinet as well as the joinery of the cabinet and function of doors when the unit is subjected to loads normally expected for laboratory furniture.

Fig 9. Wall Mounted Cabinet Description of Test Cabinet

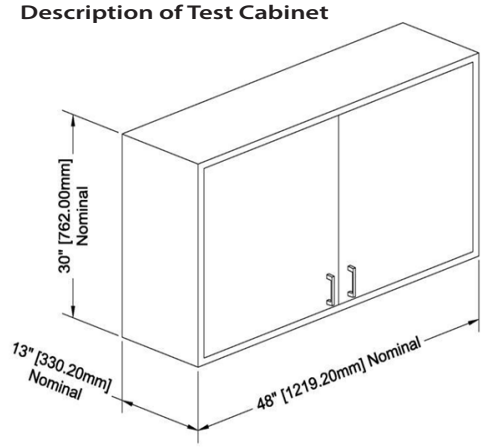

9.2.2 Test Procedure

The unit and shelves shall be mounted to a wall in a manner recommended by the manufacturer. Using sand or shot bags weighing 10 pounds (4.55 Kg) each, load cabinet bottom, each shelf, and top uniformly with 40 pounds (18.18 Kg) per square foot to a maximum of 200 pounds (90.91 Kg) each. Maximum load to any cabinet shall not exceed 600 pounds (272.73 Kg) with the total load being distributed as 160 pounds (72.57 Kg) on the bottom, 160 pounds (72.57 KG) on the top and 140 pounds (53.50 Kg) per shelf (2 shelves required). Test to be performed with doors closed.

9.2.3 Acceptance Level

With weights in place, after a period of 24 hours, operate doors through full travel to verify normal operation of doors. Remove weights and operate doors to verify normal operation. Verify that there is no significant permanent deflection of cabinet top, cabinet back, cabinet bottom, or shelves. After weights are removed, the cabinet shall show no permanent damage to the cabinet, cabinet bottom, or shelves.

10.0 Tables

Not Applicable to Phenolic Casework.

LABORATORY FURNITURE
CERTIFICATE OF PERFORMANCE

_____ certifies that its laboratory furniture identified as
(Company Name)

_____ , has been tested in conformance with the full requirements
(Test Unit)

of the **SEFA 8-PH-2020 Recommended Practices**. Testing was performed by a SEFA-approved Independent Third Party Test Lab with results noted below.

Full documentation of the test results is available upon request in a bound report that includes a detailed description of the test unit and procedures, witnesses results and appropriate drawings or photographs of the test unit and procedures.

TEST	TEST RESULTS PASS/FAIL	TEST	TEST RESULTS PASS / FAIL
4.2		6.3	
4.3		6.4	
4.4		6.5	
4.5		7.2	
5.1		8.1	*See Attached Form*
5.3		8.2	
6.1		9.2	

Name:	Name:
Address:	Title:
	Signature:
Telephone:	**COMPANY OFFICER INFORMATION**
Fax:	Name:
	Title:
Date:	Signature:

© SEFA - 5th Edition Desk Reference - Version 3.0

CHEMICAL RESISTANCE TESTING – 8-PH-2020

Date of Test: _____ Sample Description: _____

Type of Material Coated: _____ Coating Type: _____

Rating Scale: Level 0 – No Detectable Change
Level 1 – Slight Change in Color or Gloss
Level 2 – Slight Surface Etching or Severe Staining
Level 3 – Pitting, Cratering, Swelling, Erosion of Coating. Obvious and Significant Deterioration

Test No.	Chemical Reagent	Rating	Comments
1.	Acetate, Amyl		
2.	Acetate, Ethyl		
3.	Acetic Acid, 98%		
4.	Acetone		
5.	Acid Dichromate, 5%		
6.	Alcohol, Butyl		
7.	Alcohol, Ethyl		
8.	Alcohol, Methyl		
9.	Ammonium Hydroxide, 28%		
10.	Benzene*		
11.	Carbon Tetrachloride		
12.	Chloroform		
13.	Chromic Acid, 60%		
14.	Cresol		
15.	Dichloroacetic Acid		
16.	Dimethylformamide		
17.	Dioxane		
18.	Ethyl Ether		
19.	Formaldehyde, 37%		
20.	Formic Acid, 90%		
21.	Furfural		
22.	Gasoline		
23.	Hydrochloric Acid, 37%		
24.	Hydrofluoric Acid, 48%		
25.	Hydrogen Peroxide, 30%		
26.	Iodine, Tincture of		
27.	Methyl Ethyl Ketone		
28.	Methylene Chloride		
29.	Mono Chlorobenzene*		
30.	Naphthalene		
31.	Nitric Acid, 20%		
32.	Nitric Acid, 30%		
33.	Nitric Acid, 70%		
34.	Phenol, 90%		
35.	Phosphoric Acid, 85%		
36.	Silver Nitrate Saturated		
37.	Sodium Hydroxide 10%		
38.	Sodium Hydroxide 20%		
39.	Sodium Hydroxide 40%		
40.	Sodium Hydroxide Flake		
41.	Sodium Sulfide Saturated		
42.	Sulfuric Acid, 33%		
43.	Sulfuric Acid, 77%		
44.	Sulfuric Acid, 96%		
45.	Sulfuric Acid 77%& Nitric Acid 70% equal parts		
46.	Toluene		
47.	Trichloroethylene		
48.	Xylene		
49.	Zinc Chloride, Saturated		

TEST PERFORMED BY: _____ DATE: _____

Scientific Equipment & Furniture Association
Recommended Practices

SEFA 8-PL-2020
Laboratory Grade Plastic Laminate Casework

SEFA World Headquarters
65 Hilton Avenue
Garden City, NY 11530

Tel: 516-294-5424
www.sefalabs.com

SEFA SPELLS SAFE

Table of Contents

	Page
Committee Members	**299**
Foreword	**300**
Sections	
1.0 Scope	**301**
2.0 Purpose	**301**
3.0 Definitions	**301**
3.1 Description of Testing Apparatus	
4.0 Base Cabinets	**304**
4.1 Description of Test Unit	
4.2 Cabinet Load Test	
4.2.1 Purpose of Test	
4.2.2 Test Procedure	
4.2.3 Acceptance Level	
4.3 Cabinet Concentrated Load Test	
4.3.1 Purpose of Test	
4.3.2 Test Procedure	
4.3.3 Acceptance Level	
4.4 Cabinet Torsion	
4.4.1 Purpose of Test	
4.4.2 Test Procedure	
4.4.3 Acceptance Level	
4.5 Cabinet Submersion Test	
4.5.1 Purpose of Test	
4.5.2 Test Procedure	
4.5.3 Acceptance Level	
4.6 Spill Containment Test	
Not applicable to Plastic Laminate Casework	
5.0 Doors	**307**
5.1 Door Hinge Test	
5.1.1 Purpose of Test	
5.1.2 Test Procedure	
5.1.3 Acceptance Level	
5.2 Door Impact Test	
Not applicable to Plastic Laminate Casework	
5.3 Door Cycle Test	
5.3.1 Purpose of Test	
5.3.2 Test Procedure	
5.3.3 Acceptance Level	
6.0 Drawers	**307**
6.1 Drawer Static Test	
6.1.1 Purpose of Test	
6.1.2 Test Procedure	
6.1.3 Acceptance Level	
6.2 Drawer and Door Pull Test	
Not applicable to Plastic Laminate Casework	
6.3 Drawer Impact Test	
6.3.1 Purpose of Test	
6.3.2 Test Procedure	
6.3.3 Acceptance Level	
6.4 Drawer Internal Impact Test	
6.4.1 Purpose of Test	
6.4.2 Test Procedure	
6.4.3 Acceptance Level	
6.5 Drawer Cycle Test	
6.5.1 Purpose of Test	
6.5.2 Test Procedure	
6.5.3 Acceptance Level	
7.0 Shelving	**309**
7.1 Description of Test Unit	
7.2 Shelf Load Test	
7.2.1 Purpose of Test	
7.2.2 Test Procedure	
7.2.3 Acceptance Level	

Table of Contents (cont'd)

Page

8.0 Cabinet Surface Finish Tests 310

8.1 Chemical Spot Test
8.1.1 Purpose of Test
8.1.2 Test Procedure
8.1.3 Acceptance Level

8.2 Boiling Water Test
8.2.1 Purpose of Test
8.2.2 Test Procedure
8.2.3 Acceptance Level

8.3 Ball Impact Test
8.3.1 Purpose of Test
8.3.2 Test Procedure
8.3.3 Acceptance Level

8.4 Paint Adhesion Test
Not applicable to
Plastic Laminate Casework

8.5 Paint Hardness Test
Not applicable to
Plastic Laminate Casework

8.6 Dart Impact Test
8.6.1 Purpose of Test
8.6.2 Test Procedure
8.6.3 Acceptance Level

8.7 Edge Delaminating Test
8.7.1 Purpose of Test
8.7.2 Test Procedure
8.7.3 Acceptance Level

8.8 Edge Impact Test
8.8.1 Purpose of Test
8.8.2 Test Procedure
8.8.3 Acceptance Level

Page

8.9 Wear Resistance (Abrasion) Test
8.9.1 Purpose of Test
8.9.2 Test Procedure
8.9.3 Acceptance Level

9.0 Wall Cabinets, Counter Mounted and Tall Units 313

9.1 Description of Test Unit

9.2 Load Test
9.2.1 Purpose of Test
9.2.2 Test Procedure
9.2.3 Acceptance Level

10.0 Tables 314

10.1 Description of Test Unit

10.2 Load Test
10.2.1 Purpose of Test
10.2.2 Test Procedure
10.2.3 Acceptance Level

10.3 Table Racking
10.3.1 Purpose of Test
10.3.2 Test Procedure
10.3.3 Acceptance Level

Forms 316

© SEFA - 5th Edition Desk Reference - Version 3.0

SEFA 8-PL Committee Members

Committee Co-Chairs

Bert Bowden Case Systems

Kevin Kovash - TMI Systems Corporation

FUTURELABS

Kewaunee Scientific

Waldner Laboreinrichtungen

Foreword

SEFA Profile

The Scientific Equipment and Furniture Association (SEFA) is an international trade association comprised of manufacturers of laboratory furniture, casework, fume hoods and members of the design and installation professions. The Association was founded to promote this rapidly expanding industry and improve the quality, safety and timely completion of laboratory facilities in accordance with customer requirements.

SEFA Recommended Practices

SEFA and its committees are active in the development and promotion of Recommended Practices having domestic and international applications. Recommended Practices are developed by the association taking into account the work of other standard writing organizations. Liaison is also maintained with government agencies in the development of their specifications.

SEFA's Recommended Practices are developed in and for the public interest. These practices are designed to promote a better understanding between designers, architects, manufacturers, purchasers, and end-users and to assist the purchaser in selecting and specifying the proper product to meet the user's particular needs. SEFA's Recommended Practices are periodically updated. The Recommended Practices are numbered to include an annual suffix which reflects the year that they were updated. SEFA encourages architects to specify these Recommended Practices as follows: "SEFA 8-PL-2020".

SEFA Glossary of Terms

SEFA has developed a Glossary of Terms (SEFA 4-2020) for the purpose of promoting a greater understanding between designers, architects, manufacturers, purchasers and end users. The terms defined by SEFA are frequently used in contracts and other documents, which attempt to define the products to be furnished or the work involved. The Association has approved this Glossary in an effort to provide uniformity among those who use these terms. Where a specific Recommended Practice contains definitions which differ from those in the Glossary of Terms, then the definitions in the specific Recommended Practice should be used.

SEFA encourages all interested parties to submit additional terms or to suggest any changes to those terms already defined by the Association. The definitions should be used to help resolve any disputes that may arise or to incorporate the applicable terms in any contract or related documents.

SEFA Disclaimer

SEFA uses its best effort to promulgate Recommended Practices for the benefit of the public in light of available information and accepted industry practices. SEFA does not guarantee, certify or assure the safety or performance of any products, components, or systems tested, installed, or operated in accordance with SEFA Recommended Practices or that any tests conducted under its Recommended Practices will be non-hazardous or free from risk. SEFA encourages the use of third party independent testing where appropriate.

Note : ***Testing as described in this document must be performed and documented by a SEFA-approved third party testing facility. See Page 36 of the SEFA Desk Reference 5th Edition Version 3.0, or visit us at SEFALABS.COM for the most current list of SEFA-approved test labs.***

© SEFA - 5th Edition Desk Reference - Version 3.0

1.0 Scope

The scope of this document is intended to provide manufactures, specifiers, and users tools for evaluating the safety, durability, and structural integrity of plastic laminate laboratory grade furniture and complimentary items. This document is inclusive of casework (base units, wall mounted units, counter mounted units, tall units, tables and, shelving systems). Casework, tables, and shelving manufactured for laboratory use should be subjected to the tests and procedures outlined below.

Plastic laminate laboratory grade casework shall consist of base cabinets, wall cabinets, counter mounted cabinets, tall cabinets, tables, and shelving and shall be constructed of a core, high pressure laminate, backer, liner or thermally fused melamine. A plastic laminate cabinet consists of top, bottom, end members and a back. Aggregate test results may vary by manufacturer. Procedures for testing performance criteria shall be as outlined in this document and results made available upon request. It is assumed that the test model reflects the performance criteria for all products. However there may be certain door/ drawer configurations and/or sizes outside the test unit config- uration identified that may not meet certain parts of this test. A test unit has been identified in this document with the sole purpose of obtaining continuity of procedures and results in a scientific format.

Great care should be exercised when heavy loads are applied to the cabinet and appropriate safety precautions taken to insure safety of testing personnel. Properly trained personnel should perform all tests. SEFA assumes no liability for damage or injury as a result of conducting these tests.

The acceptance levels are based on the cumulative field experience and laboratory testing of SEFA members based on actual needs of laboratories. This is a performance- based document. Specifications proscribing specific materials, hardware, finishes, workmanship or construction may or may not meet acceptance levels of this document. If proscriptive components of the specifications conflict with compliance of this document then the Architectural proscribed elements take precedent.

Testing as outlined in this document must be performed and documented by a SEFA- approved independent third party testing facility.

2.0 Purpose

The purpose of this document is to describe the distinguishing performance characteristics of plastic laminate laboratory grade furniture and complimentary items. Furniture shall be of a type specifically designed and manufactured for installation and use in a laboratory.

Although aggregate test results may vary from manufacturer to manufacturer, procedures for testing performance criteria shall be as outlined in this document and results made available upon request. It is assumed that the test model reflects the performance criteria for all products regardless of construction, size, or style used. A test unit has been identified in this document with the sole purpose of obtaining continuity for procedures and results in a scientific format.

3.0 Definitions

Acceptance Levels - The acceptance level for each performance criteria is based on the cumulative experience of actual field testing and laboratory results of SEFA members. Acceptance levels describe the expected outcome of each test procedure.

ANSI/BIFMA - ANSI is the American National Standards Institute. Approval of an American National Standard requires verification by ANSI that the requirements for due process, consensus, and other criteria for approval have been met by the standards developer. BIFMA is the Business and Institutional Furniture Manufacturer's Association, an association of manufacturers of desk products and the like.

Apparatus - A machine or group of machines and accessories.

Arithmetic Mean - A number obtained by dividing the sum of a set of quantities by the number of quantities in a set; average.

ASTM - American Society for Testing and Materials.

Base Cabinets - A base cabinet is a storage devise consisting of two ends, a back, a face and may or may not include a top or top frame. The face may be open, to access the storage area, or may be outfitted with one or more drawers and/or doors. A base cabinet is always placed on the floor and normally supports a surface. The top sur-face is normally no more than 42" (1,067mm) off the floor surface.

Best Practices - When given a choice of grade, the "best practice" is to select one that offers a well defined degree of control over the quality of workmanship, materials, and installation of a project. SEFA-8 Recommended Practices are written from a view of high quality laboratory furniture.

Cabinet Depth (Deep) - Given a front, bottom, two sides, and a top, the cabinet depth is a measure of the side of the cabinet, in its normal upright position, from the outside back to the outside front excluding doors and door fronts.

Cabinet Height (High) - Given a front, bottom, two sides, and a top, the cabinet height is a measure of the side of the cabinet, in its normal upright position, from the bottom edge of the side to the top, excluding any surface.

Cabinet Width (Wide) - Given a front, bottom, two sides, and a top, the cabinet width is a measure of the front of the cabinet in its normal upright position from one side to the other.

Casework - Base and wall cabinets, display fixtures, and storage shelves. The generic term for both "boxes" and special desks, reception counters, nurses stations and the like. Generally includes the tops and work surfaces.

Chase (Plumbing Area) - Space located behind the back of the base cabinet used to house plumbing or electric lines.

Composition Core - A core material using particleboard, MDF, or agrifiber product.

Combination Unit - A base unit of the type that has both door(s) and drawer(s).

Counter Mounted Cabinet - A counter mounted cabinet is a wall cabinet (usually with a height of approximately 48" [1,219mm] and is typically mounted on the work surface or shelf, as in a reagent shelf).

Cupboard (Door Unit) - That portion of the cabinet with no drawer(s) that may be enclosed by doors.

Drawer - A sliding storage box or receptacle opened by pulling out and closed by pushing in.

Edge - Material of varying thickness commonly used to provide protection and seal the machine edge(s) of laminated panels. Typical edge materials are ABS, PVC,self-edge, or wood.

Free Standing - Requiring no support or fastening to other structures.

Hardware - Items such as screws, pulls, hinges, latches, locks, and drawer slides used in the construction of casework.

Joinery – The junction of two pieces intended to be permanently connected.

Laboratory Furniture - Furniture designed and manufactured for installation and use in a laboratory.

Latch - A piece of hardware designed to hold a door closed.

Leveling Screws (Levelers) - Threaded components designed to allow adjustment of the cabinet vertically as needed for leveling.

Medium Density Fiberboard (MDF) - Wood particles reduced to fibers in a moderate pressure steam vessel combined with a resin, and bonded together under heat and pressure.

Nominal Dimensions - Not all cabinet manufacturers produce product to the identical

© SEFA - 5th Edition Desk Reference - Version 3.0

dimensions. All dimensions given in this document are accurate to within five percent, which is considered nominal.

Particleboard - A panel or core product composed of small particles of wood and wood fiber that are bonded together with synthetic resin adhesives in the presence of heat and pressure.

Permanent Damage - Destruction to material or joinery that would require repair in order to return to its original state.

Permanent Deformation - Deflection that has exceeded the limits of the product, thus changing the original shape of the product

Permanent Deterioration - Erosion or corrosion of material such that the component will never return to its original shape.

Permanent Failure - See "permanent damage."

Plywood - The term plywood is defined as a panel manufactured of three or more layers (plies) of wood or wood products (veneers or overlays and/or core materials), generally laminated into a single sheet (panel). Plywood is separated into two groups according to materials and manufacturing, hardwood plywood and softwood plywood. Except for special constructions, the grain of alternate plies is at right angles.

Pulls - Articles of hardware used to grasp and open/close the door or drawer (see also hardware).

Rack Resistance - The ability of a product to resist stresses that tend to make the product distort and the drawers to become misaligned.

Rail - A horizontal member extending from one side of the cabinet to the other.

Reagent - A substance used because of its chemical or biological activity.

Removable Back - A panel located on the inside back of the base cabinet, which is removable in order to gain access to utilities.

Stainless Steel - Iron based alloys containing more chromium than the 12% necessary to produce passivity (less reactive), but less than 30%.

Submersion - Covered with water.

Tables - An article of furniture having a flat, horizontal surface supported by one or more support members (legs), and a frame (apron).

Tall Cabinet (Full Height Unit) - A tall cabinet is a storage device that consists of two ends, a top and bottom panel, a back and a face. The face may be open to access the storage area or may be outfitted with one or more drawers and/or door(s). A tall cabinet is always placed on the floor and is nominally 84" (2,134mm) high.

Torsion – A force acting at a distance which tends to twist or rotate an object or cabinet.

Uniformly Distributed – A force applied evenly over the area of a surface.

Unobstructed Entry - A cabinet is deemed to be unobstructed if access to the entire storage area is completely without obstacle.

Upright Position - A cabinet oriented in its intended position.

Veneer Core Plywood – A panel or core product composed of an odd number of thin veneer layers that are bonded together with an adhesive. Except for special constructions, the grain of alternate plies is at right angles. All plies shall be combinations of species, thickness, density, and moisture content to produce a balanced panel. All inner plies, except the innermost ply, shall occur in pairs.

Wall Cabinet - A wall cabinet is a storage device consisting of two ends, a back, a top, bottom, and a face. The face may be open to access the storage area or may be outfitted with one or more door(s). The wall cabinet usually does not include a drawer. A wall cabinet is always mounted on a vertical surface such as a wall, a divider, panel or some other vertical structure. A wall cabinet is usually less than 48" (1,219mm) high.

Work Surface - A normally horizontal surface used to support apparatus at a convenient height

above the floor. Work surfaces are normally positioned atop a base cabinet or table structure.

3.1 Description of Testing Apparatus

Solid Steel Bar - A square solid steel bar 2 1/2" (63mm) square, 28 1/4" (717mm) long, weighing 50 pounds (22.679 Kg).

Sand or Shot Bag (10 pounds [4.535 Kg]) - A bag of plastic or cloth with the approximate dimensions 10 9/16" (268mm) x 11" (279mm) as in typical "gallon size re-closable stor-age bags." Filled with enough sand or shot so that contents weigh 10 pounds (4.535 Kg).

Sand Bag (20 pounds [9.071 Kg]) - Two 10 pound (4.535 Kg) sand bags bound together.

Shot Bag (100 lbs. [45.359 Kg]) - A plastic or cloth bag of sufficient size to contain 100 pounds (45.359 Kg) of shot.

Cycling Mechanism - Per ANSI BHMA 156.9.-2003

Steel Rod - A 2" (51mm) diameter by 12" (305mm) long rod, approximately 10 pounds (4.535 Kg) in weight.

Hardwood Corner Block - A block of hardwood 2" (51mm) square by 1" (25.4mm) high.

Edge Delamination test stand – The sample per section 8.7, Figure 8, is to be clamped into a base stand by the core material that the edgeband is glued to. The Instron force gauge (or equivalent type of force gauge) is mounted in a manner above the sample to pull vertically upward on the edgeband per Figure 9.

Edge Impact test stand – Please refer to Section 8.8, Figures 10 and 11, for dimensional information on the critical sizes that are to be used. The test stand is to be mounted to a stable vertical surface (large test stand frame or building wall) that will not allow impact absorption. The 22.75" hinged arm is 1" square, 14 ga tubing with a .75" x 2" x 10" solid steel bar attached to the end portion. The arm is hinged to the top extension of the base plate. The 9.5" square test sample is bolted to the test base plate as shown in figure #10 using a piece of metal angle above and below the sample. Bolts are run through both top and bottom angles and the test sample and securely tightened.

4.0 Base Cabinets

4.1 Description of Test Cabinet

The base cabinet shall be a combination of cupboard and drawer per Figure 1. The base cabinet shall be 48" +/- 1" (1219.2mm +/- 25.4mm) wide, 36" +/-1" (914.4mm +/- 25.4)mm high, and 22" +/-1" (558 mm+/- 25.4mm) deep. Cabinet dimensions do not include drawer or door front thickness. The drawer shall be above the cupboard, full width and approximately one-fourth the height of the cabinet's face opening. Drawer shall be a minimum of 18" (457.2mm) deep outside dimension. When slides are used for drawers, slides shall be a minimum of 18" (457.2mm) deep. Cupboard shall be double-door design and provide unobstructed entry into the cabinet interior with the doors open. The unit shall contain one adjustable shelf. The cabinet back shall be the removable type (per manufactures standard design as used for access to the plumbing or chase area) with the removable panel removed. Removable panel to be a minimum 36"x18" (914.4mm x 457.2mm). The cabinet shall have full height end panels with integral toeboard. The cabinet shall be free standing, squared and sitting 1" (25.4mm) off the floor atop four hardwood corner blocks 2" (50.8mm) square and 1" (25.4mm) high. A top of 1" (25.4mm) thick 37-50 pcf medium density fiberboard shall be positioned on the cabinet without glue or

Fig. 1 - Description of Base Cabinet

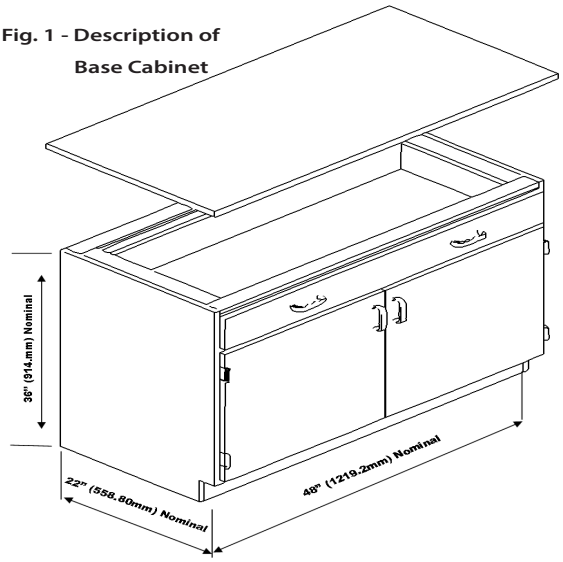

© SEFA - 5th Edition Desk Reference - Version 3.0

fasteners of any kind. The top dimensions will be such that it will overhang the cabinet perimeter by 1" (25.4).

Before conducting the test, a visual examination shall be conducted to verify that the unit configuration and setup conditions are appropriate. Operate doors and drawer. Doors should be free moving and latch properly. Inspect the unit for dimensions and note the fit of doors and drawers to the cabinet body. Open and close the drawer. The drawer should be free moving and function as specified by the manufacturer. Discontinue evaluation if unit is not in compliance or if malfunction is noted.

Although aggregate test results may vary from manufacturer to manufacturer, procedures for testing performance criteria shall be as outlined in this document and results made available upon request. It is assumed that the test model reflects the performance criteria for all products regardless of construction, size, or style used. A test unit has been identified in this document with the sole purpose of obtaining continuity of procedures and results in a scientific format.

4.2 Cabinet Load Test

4.2.1 Purpose of Test

The cabinet load test will challenge the structural integrity and load bearing capability of the cabinet construction. Regardless of countertop selection or attachment of cabinet to wall or floor, this test will demonstrate the ability of the cabinet to support heavy applied loads. This is not intended to test the functional characteristics of the cabinet under heavy loads.

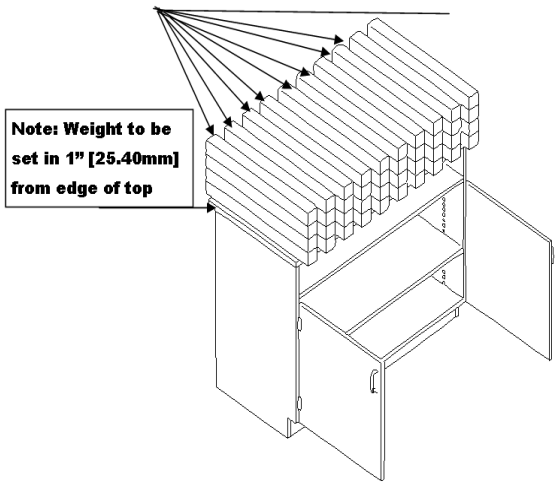

4.2.2 Test Procedure

Verify that the cabinet is level. Remove drawer and open doors for testing purpose. Load the cabinet top by using 2000 pounds (907.184 Kg) of solid steel bars (per Section 3.1) stacked four high and spaced per Figure 2. After 24 hours, unload the cabinet.

4.2.3 Acceptance Level

The cabinet will have no permanent failure.

4.3 Cabinet Concentrated Load Test

4.3.1 Purpose of Test

The purpose of this test is to challenge the functional characteristics of the cabinet when subjected to a concentrated load on the center of the cabinet top.

4.3.2 Test Procedure

Using solid weights or 10 pound (4.535 Kg) sand bags (per Section 3.1), apply a total of 200 pounds (90.718 Kg) to the top of the cabinet along the cabinet centerline (see Figure 3). Operate doors and drawers.

4.3.3 Acceptance Level

Under condition of test load, doors and drawer shall operate normally. There shall be no

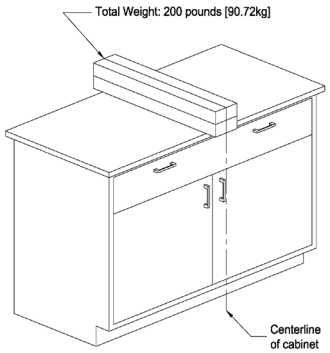

Figure 3. Base Cabinet Concentrated Load Test

permanent distortion to front rail, cabinet joinery, doors, or drawers.

4.4 Cabinet Torsion Test

4.4.1 Purpose of Test

This test will evaluate the structural integrity of the cabinet construction when subjected to a torsional load.

4.4.2 Test Procedure

The cabinet shall be tested in its normal upright position, raised not less than four-inches off the floor and supported on rear and one front corner. The area of support under the cabinet shall be located not more than 6" (152.4mm) in from each supported corner. Secure the cabinet diagonally from the unsupported corner with seven solid steel bars per Section 3.1 (350 pounds (158.757 Kg) of weight), on the top of the cabinet

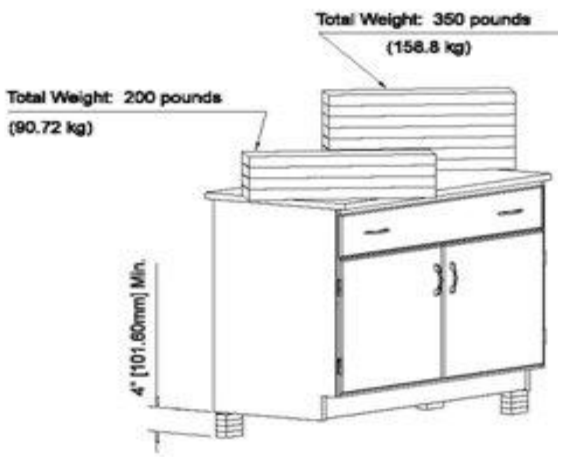

Figure 4. Base Cabinet Torsion Test Procedure.

to prevent overturning. Apply four solid steel bars (200 pounds [90.718 Kg] of weight) to the unsupported corner for a period of 24 hours (see Figure 4). Remove weight and place cabinet on the floor in its normal upright position. Observe cabinet joinery. Level the cabinet and measure the face and back of the cabinet across the diagonal corners.

4.4.3 Acceptance Level

When returned to normal position, the operation of the cabinet shall be normal, and there will be no permanent damage. The difference between the two measurements taken from measuring the diagonal corners shall be no more than 1/8" (3.175mm).

4.5 Cabinet Submersion Test

There are numerous options for removable bases or ladder type bases with plastic laminate casework, including exterior grade plywood, MR board, composites, etc. Standard 1-M-2 and 1-M-3 particleboard is not recommended for sub-base material if there is a possibility of standing water as an issue.

4.5.1 Purpose of Test

This test will demonstrate the ability of a cabinet to resist wicking of moisture from the floor. Only units that rest on the floor or a unit where the base is within 2" (50.8 mm) of the floor should be subjected to this test.

4.5.2 Test Procedure

The material thickness along the perimeter of the cabinet shall be measured at 6" (152.4mm) increments. Record the thickness of the material to be submerged in water. Calculate the arithmetic mean of the data taken. Place the entire test cabinet in its upright position such that the cabinet is submerged 2" above the bottom of the removable base. Cabinet doors are removed for this test. After 24 hours, remove the unit from the water. After 48 hours of drying time, measure the thickness of the material at the same points measured initially. Calculate the new arithmetic mean. After the unit has been allowed to dry, inspect for other damage.

4.5.3 Acceptance Level

The cabinet will show no permanent deformation or deterioration. Increase in thickness shall not exceed ten percent of the initial mean measurements.

4.6 Spill Containment Test

Not applicable to Plastic Laminate Casework.

© SEFA - 5th Edition Desk Reference - Version 3.0

5.0 Doors

5.1 Door Hinge Test

5.1.1 Purpose of Test

This test will demonstrate the durability of the door, door attachment and its hardware (hinge leaf, screws, etc.) to an applied load of 160 pounds (72.575 Kg).

5.1.2 Test Procedure

Remove the shelf for this test. With unit and top set as described in Section 4.1, add sufficient weight to the top in order to prevent overturning. With cabinet door opened 90-degrees, hang a sling made up of two 80 pound (45.359 Kg) weights (shot bags or solid weights) over top of the door at a point 12" (304.8mm) out from the hinge centerline (see Figure 5). Slowly move door through two full cycles of the hinge at 160-degree arc. Remove weight and swing door through its full intended range of motion and close door.

5.1.3 Acceptance Level

The open door shall withstand a load of 160pounds (72.575 Kg) when applied at a point 12"(304.8mm) from the hinge centerline without permanent damage. Operation of the door, after test shall show no significant permanent damage that will cause binding of the door or hinges or that will adversely affect operation of the catch.

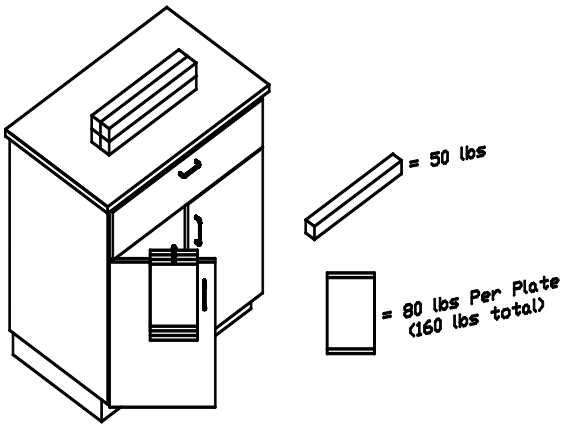

Fig 5 Base Cabinet Door Load Configuration
Note: Load top sufficient to prevent tipping of base cabinet

5.2 Door Impact Test

Not applicable to Plastic Laminate Casework.

5.3 Door Cycle Test

5.3.1 Purpose of Test

This test will demonstrate the durability of the door hinge hardware to withstand 100,000 cycles as a reliable measure for longevity).

5.3.2 Test Procedure

This test shall be in conformance to the ANSI test procedure A156.9, Grade 1, requirements for cycle testing of doors. A cycling mechanism shall swing door 90-degrees. Door shall operate for 100,000 cycles with a speed not greater than 15 cycles per minute.

5.3.3 Acceptance Level

Door shall operate for the full cycle period without deterioration that will significantly affect the function of the door. The door shall operate freely without binding.

6.0 Drawers

6.1 Drawer Static Test

6.1.1 Purpose of Test

This test will demonstrate the ability to support a point load given to the front of the drawer and will challenge the drawer suspension system and the attachment of the drawer head to the drawer.

6.1.2 Test Procedure

With unit and top set as described in Section 4.1, add sufficient weight to the top in order to

prevent overturning. Open the drawer to 13" (330.2mm) of travel and hang 150 pounds (68.03 Kg) from the drawer head at the centerline of the drawer for five minutes. Remove the weight and operate the drawer through the full cycle.

6.1.3 Acceptance Level

There shall be no interference with the normal operation of the drawer and the drawer head should remain tightly fastened to the drawer.

Fig. 6 Base Cabinet Drawer Static Load Test Configuration

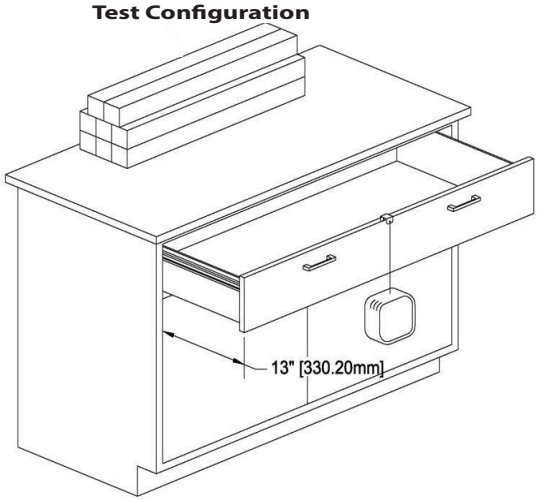

Note: Load top suffcient to prevent tipping of base cabinet. Weight shall be located at the back of the worksurface and centered.

6.2 Drawer and Door Pull Test

Not Applicable to Plastic Laminate Casework.

6.3 Drawer Impact Test

6.3.1 Purpose of Test

This test will demonstrate the resistance to impact of the drawer bottom.

6.3.2 Test Procedure

Remove drawer; support each corner with 2"x2"x1" (50.8 x 50.8 x 25.4 mm) supports. Drop a 10 pound (4.545 Kg) sand or shot bag from a height of 24" (609.6 mm) into the bottom of the drawer at the center of the width of the drawer. Remove the sand or shot bag.

6.3.3 Acceptance Level

No damage or breakout of the drawer bottom.

6.4 Drawer Internal Rolling Impact Test

6.4.1 Purpose of Test

This test will evaluate the strength of the drawer head, bottom, and back as a result of opening and closing the drawer with a rolling load.

6.4.2 Test Procedure

Position the drawer on a table at a 45-degree angle per Figure 7. Place a 2" (50.8mm) diameter by 12" (304.8mm) long steel rod (approximately 10 pounds [4.545 Kg]) 13" (330.2mm) from the target impact area such that the rod will roll freely to impact the back of the drawer. Subject the back to three impacts and reverse the drawer to subject the front to three additional impacts.

Fig. 7 Base Cabinet Drawer Internal Rolling` Impact Test Configuration

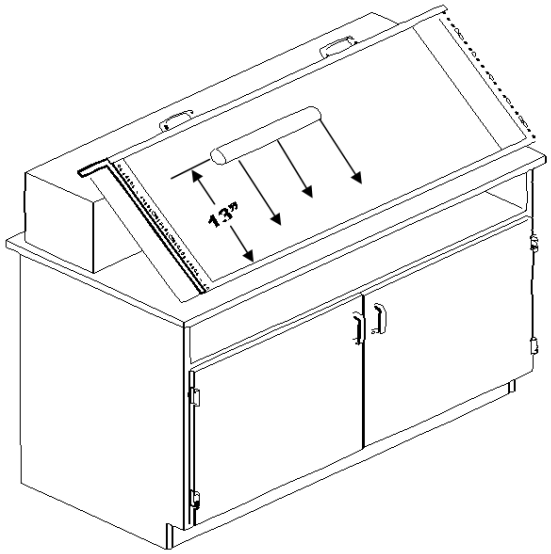

6.4.3 Acceptance Level

The drawer shall show no permanent damage. All joinery shall be intact and the drawer, when replaced in the unit, shall operate normally. Minor scratches and dents are acceptable.

© SEFA - 5th Edition Desk Reference - Version 3.0

6.5 Drawer Cycle Test

6.5.1 Purpose of Test

This test is intended to test the drawer's operation under full load. To be considered Laboratory Grade Plastic Laminate Casework, the mechanical drawer slides must be rated at a minimum, ANSI/ BHMA A156.9 Grade 1.

6.5.2 Test Procedure

Mechanical Suspension Systems – A dynamic load of 100 pounds (45.359 Kg) shall be uniformly distributed in the drawer. Measure force required to activate the drawer. Operate over the full range of motion without engaging bumpers, stops or self-closing features for 50,000 cycles at a rate not to exceed 8 - 12 cycles per minute.

6.5.3 Acceptance Level

The drawer shall operate freely without evidence of binding. The force required to open and close loaded drawer shall not be greater than 8 pounds to activate.*

Fig 8 Drawer Cycling Mechanism Test Configuration

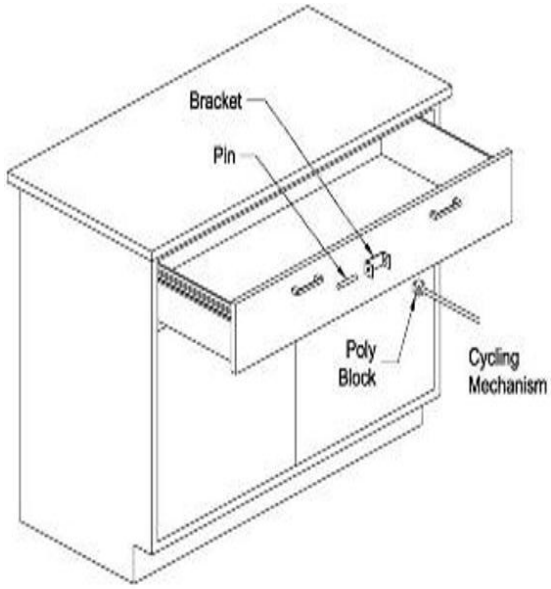

The American's with Disabilities Act (ADA) requires a force no greater than five pounds to activate hardware. The load rating in this document is intended only for testing conditions where loads challenge the durability of the hardware. Under actual conditions, drawer loading should be reduced to levels that result in compliance with ADA as applicable.

7.0 Shelving

7.1 Description of Test Cabinet

Plastic Lamnate shelving shall be tested using the following procedure. The shelves to be tested are as described in Sections 4.1 and 9.1 "Description of Test Cabinet".

7.2 Shelf Load Test

7.2.1 Purpose of Test

This test will demonstrate the ability of a shelf and its mounting hardware to support loads of 40 pounds (18.143 Kg) per square foot, not to exceed 200 pounds (90.718 Kg).

7.2.2 Test Procedure

A shelf shall be mounted in a manner in which it is designed. Measure the distance from the underside of the shelf to a reference point perpendicular to the center of the shelf. Use shot or sand bags weighing 10 pounds (4.535 Kg) each. Unless otherwise specified, load the shelf uniformly to 40 pounds (18.14 kg) per square foot of shelf area to a maximum of 200 pounds (90.71 Kg). Measure the deflection of the shelf by measuring the distance to the reference point and calculating the difference between the two measurements. Record data and remove the load from the shelf.

7.2.3 Acceptance Level

Different materials will perform differently to the loads based on the Modulus of Elasticity of the material and the cross section moment of inertia for the shape of the material. Longer shelves will support less loads than shorter shelves. The allowable maximum deflection of a shelf is 1/180 of the span and not in excess of .25" (6.35mm).

8.0 Cabinet Surface Finish Tests

8.1 Chemical Spot Test

Users should consider the chemical and staining agents that might be used near the laboratory casework. Common guidelines can be found by referring to: The casework manufacturer printed data for chemical and stain resistance, NEMA LD3-2000 for wood product chemical resistance, ASTM D3023 and ASTM C1378 for stain resistance or the most current versions. Because chemical and stain resistance is affected by concentration, time, temperature, humidity, housekeeping and other factors, it is recommended that users test samples in their actual environment with the substances they use.

8.1.1 Purpose of Test

The purpose of the chemical spot test is to evaluate the resistance a finish has to chemical spills.

Note: Many organic solvents are suspected carcinogens, toxic and/or flammable. Great care should be exercised to protect personnel and the environment from exposure to harmful levels of these materials.

8.1.2 Test Procedure

Obtain one sample panel measuring 14" x 24" (355.6mm x 609.6mm). The received sample to be tested for chemical resistance as described herein.

Place panel on a flat surface, clean with soap and water and blot dry. Condition the panel for 48-hours at 73º +/- 3ºF (23º +/- 2ºC) and 50 +/- 5% relative humidity or the currently accepted guideline set by ASTM. Test the panel for chemicalresistance using forty-nine different chemical reagents by one of the following methods.

Method A - Test volatile chemicals by placing a cotton ball saturated with reagent in the mouth of a 1-oz. (29.574cc) bottle and inverting the bottle on the surface of the panel.

Method B - Test non-volatile chemicals by placing five drops of the reagent on the surface of the panel and covering with a 24mm watch glass, convex side down.

For both of the above methods, leave the reagents on the panel for a period of one hour. Wash off the panel with water, clean with detergent and naptha, and rinse with deionized water. Dry with a towel and evaluate after 24-hours at 73º +/- 3ºF (23º +/- 2ºC) and 50 +/- 5% relative humidity, or the currently accepted guideline set by ASTM using the following rating system.

Level 0 - No detectable change.
Level 1 - Slight change in color or gloss.
Level 2 - Slight surface etching or severe staining.
Level 3 - Pitting, cratering, swelling, or erosion of coating. Obvious and significant deterioration.

Note: Percentages are by volume.

8.1.3 Acceptance Level

Range of results is provided to establish the acceptable range for a Laboratory Grade Finish. Results will vary from manufacturer to manufacturer due to differences in finish formulations. Laboratory grade finishes shall result in no more than four (4) Level 3 conditions. Individual test results, for the specified 49 reagents, will be verified with the established third party, independent SEFA 8 test submittal form. Suitability for a given application is dependent upon the chemicals used in a given laboratory.

© SEFA - 5th Edition Desk Reference - Version 3.0

	Chemical Reagent	Test Method	Wilsonart Rating VG 335 Finish	Wilsonart Rating VG 78 & 18 Finish	Wilsonart Rating CHEMSURF	Formica A3CT Black 909	Formica A3CT Folkstone 927	Pionite CHEMGUARD Black
1	Acetate, Amyl	A	0	0	0	0	0	0
2	Acetate, Ethyl	A	0	0	0	0	0	0
3	Acetic Acid, 98%	B	0	0	0	0	0	0
4	Acetone	A	0	0	0	0	0	0
5	Acid Dichromate, 5%	B	2	1	0	0	1	0
6	Alcohol, Butyl	A	0	0	0	0	0	0
7	Alcohol, Ethyl	A	0	0	0	0	0	0
8	Alcohol, Methyl	A	0	0	0	1	0	0
9	Ammonium Hydroxide, 28%	B	0	0	0	1	0	0
10	Benzene*	A	0	0	0	0	0	0
11	Carbon Tetrachloride	A	0	0	0	0	0	0
12	Chloroform	A	0	1	0	0	1	1
13	Chromic Acid, 60%	B	0	0	1	1	1	0
14	Cresol	A	0	0	0	1	1	0
15	Dichloroacetic Acid	A	0	0	0	1	1	0
16	Dimethylformamide	A	0	0	0	1	0	0
17	Dioxane	A	0	0	0	0	0	0
18	Ethyl Ether	A	0	0	0	0	0	1
19	Formaldehyde, 37%	A	0	0	0	0	0	0
20	Formic Acid, 90%	B	2	2	0	1	2	1
21	Furfural	A	2	0	0	2	1	1
22	Gasoline	A	0	0	0	0	1	0
23	Hydrochloric Acid, 37%	B	2	2	0	0	0	1
24	Hydrofluoric Acid, 48%	B	2	3	1	1	2	1
25	Hydrogen Peroxide, 30%	B	0	0	0	1	0	1
26	Iodine, Tincture of	B	0	0	0	1	2	0
27	Methyl Ethyl Ketone	A	0	0	0	0	0	0
28	Methylene Chloride	A	0	0	0	1	0	0
29	Mono Chlorobenzene*	A	0	0	0	1	0	0
30	Naphthalene	A	0	0	0	0	0	0
31	Nitric Acid, 20%	B	2	2	2	0	1	1
32	Nitric Acid, 30%	B	2	2	2	1	2	1
33	Nitric Acid, 70%	B	2	3	2	3	3	2
34	Phenol, 90%	A	1	0	0	1	1	0
35	Phosphoric Acid, 85%	B	2	2	0	0	0	0
36	Silver Nitrate Saturated	B	0	2	0	0	0	1
37	Sodium Hydroxide 10%	B	1	0	2	0	0	0
38	Sodium Hydroxide 20%	B	0	1	2	0	0	0
39	Sodium Hydroxide 40%	B	0	1	2	0	0	0
40	Sodium Hydroxide Flake	B	0	0	2	0	0	0
41	Sodium Sulfide Saturated	B	0	0	0	0	0	0
42	Sulfuric Acid, 33%	B	1	1	2	0	0	1
43	Sulfuric Acid, 77%	B	1	3	2	0	1	2
44	Sulfuric Acid, 96%	B	3	3	2	2	2	2
45	Sulfuric Acid 77% &Nitric Acid 70% equal parts	B	2	3	0	1	3	2
46	Toluene	A	0	1	0	0	0	0
47	Trichloroethylene	A	0	1	0	0	1	0
48	Xylene	A	0	0	0	0	0	0
49	Zinc Chloride, Saturated	B	0	0	0	0	0	0

***IF THE USE OF THIS CHEMICAL IS PERMITTED BY LAW IN THE COUNTRY WHERE THE TESTING IS BEING PERFORMED.**

8.2 Boiling Water Resistance Test

8.2.1 Purpose of Test

The purpose of this test is to measure the ability of high-pressure laminate to maintain its color and surface finish when subjected to boiling water.

8.2.2 Test Procedure

This test procedure is outlined in ANSI/NEMA LD 3-2005 Para 3.5 Boiling Water Resistance.

8.2.3 Acceptance Level

Acceptance level as defined in ANSI/NEMA LD 3-2005 Para 3.5 Boiling Water Resistance. No effect - no change in color or surface finish.

8.3 Ball Impact Resistance Test

8.3.1 Purpose of Test

The purpose of this test is to measure the ability of high-pressure laminate to resist fractures due to impact by a large diameter ball.

8.3.2 Test Procedure

This test procedure is outlined in ANSI/NEMA LD 3-2005 Para 3.8 Ball Impact Resistance.

8.3.3 Acceptance Level

Acceptance level as defined in ANSI/NEMA LD 3-2005 Para 3.8 Ball Impact Resistance.
The report shall indicate the actual height of impact resistance. Minimum of 50" (1250mm)

8.4 Paint Adhesion Test

Not Applicable to Plastic Laminate Casework.

8.5 Paint Hardness Test

Not Applicable to Plastic Laminate Casework.

8.6 Dart Impact Test

8.6.1 Purpose of Test

The purpose of the test is to measure the ability of high-pressure laminate to resist fracture due to a small diameter ball.

8.6.2 Test Procedure

Per ANSI/NEMA LD 3-2005 Para 3.9.

8.6.3 Acceptance Level

Per ANSI/NEMA LD 3-2005 Para 3.9. The impact resistance value shall be reported in millimeters. Minimum of 500mm (20").

8.7 Edge Delaminating Test

8.7.1 Purpose of Test

The purpose of this test is to evaluate the adhesion strength between the edge and the core material.

8.7.2 Test Procedure

Mount test specimens in Instron force gauge jaws to pull the edge close to 90 degrees to the bond line of the banding, this angle may be varied based on the flexibility of the edge material. Measure the force required to separate the edge from the specimen. 2-inch x 6-inch panels with 13-inch edge banding, see Figures 8 and 9.

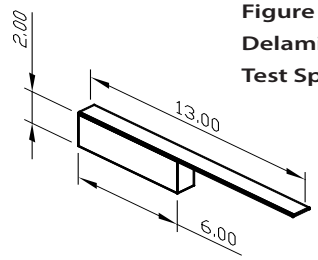

Figure 8 - Edge Delaminating Test Specimen

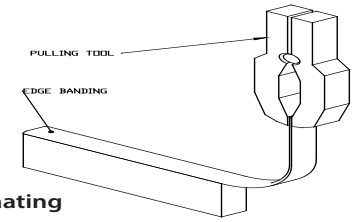

Figure 9 Edge Delaminating Test and Setup

© SEFA - 5th Edition Desk Reference - Version 3.0

8.7.3 Acceptance Level

Peel value must be greater than 18.5 lbs/in.

8.8 Edge Impact Test

8.8.1 Purpose of Test

The purpose of this test is to demonstrate the resilience of the 3 mm PVC edge band material.

8.8.2 Test Procedure

Insert test specimen with 3mm edge band facing the front into fixture, raise arm to stop, release arm and let it impact the sample one time. See Figures 10 & 11.

Figure 10
Edge Impact Test

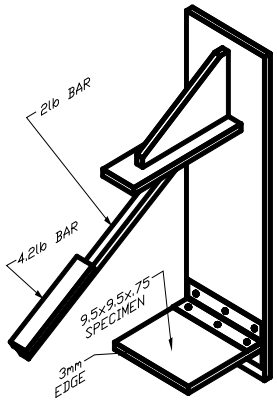

Figure 11
Edge Impact Test

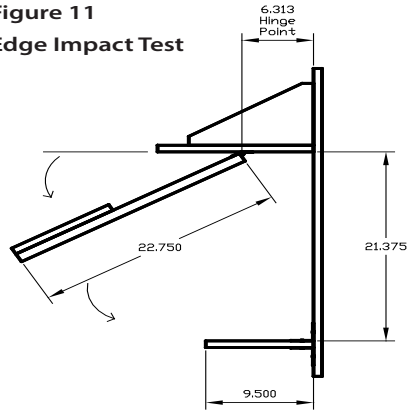

8.8.3 Acceptance Level

There shall be no signs of damage to the 3 mm edge banding that was applied to the test specimen.

8.9 Wear Resistance (Abrasion) Test

8.9.1 Purpose of Test

This Test measures the ability of high-pressure laminate to resist abrasive wear-through of the decorative layer.

8.9.2 Test Procedure

Per ANSI/NEMA LD 3-2005 Para 3.13.

8.9.3 Acceptance Level

Per ANSI/NEMA LD 3-2005 Para 3.13.

9.0 Wall, Counter Mounted and Tall Units

9.1 Description of Test Cabinet

Evaluation shall be conducted on a wall mounted cabinet with nominal dimensions as follows: 48" (1,219.2mm) +/- 1" wide, 30" (762mm) +/- 1" high, and 12" (304.8mm) +/- 1" deep. The wall cabinet shall be manufactured to manufacturers' standard construction and practices. The wall cabinet shall have two (2) doors and two (2) shelves. Shelves shall be evaluated per Section 7.0 (Shelving). The unit and shelves shall be mounted in a manner recommended by the manufacturer. A visual examination shall be conducted to verify that the configuration and installation comply with these conditions. Discontinue evaluation if unit is not in compliance or if malfunction is noted.

Figure 12
Wall Cabinet

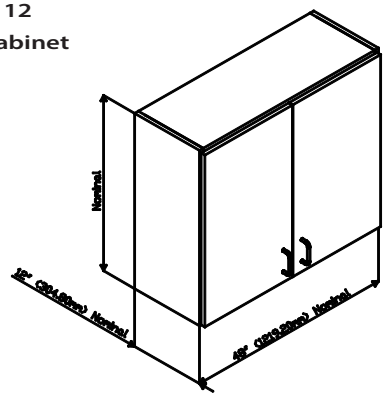

9.2 Wall Cabinet Load Test

9.2.1 Purpose of Test

The wall mounted load test will demonstrate the strength of the back of the wall cabinet as well as the joinery of the cabinet and function of doors when the unit is subjected to loads normally expected for laboratory furniture.

9.2.2 Test Procedure

Using sand or shot bags weighing 10 pounds (4.55 Kg) each, load cabinet bottom, each shelf, and top uniformly with 40 pounds (18.18 Kg) per square foot to a maximum of 200 pounds (90.91 Kg) each. Maximum load to any cabinet shall not exceed 600 pounds (272.73 Kg) (a maximum of 200 pounds [90.91 Kg] loaded to each bottom, a minimum of one shelf loaded per Section 7.0, and the top) regardless of the number of shelves. Test to be performed with doors closed.

9.2.3 Acceptance Level

With weights in place, after a period of 24 hours, operate doors through full travel to verify normal operation of doors. Remove weights and operate doors to verify normal operation. Verify that there is no significant permanent deflection of cabinet top, cabinet back, cabinet bottom, or shelves. After weights are removed, the cabinet shall show no permanent damage to the cabinet, cabinet bottom, or shelves.

10.0 Tables

10.1 Description of Test Unit

The table for evaluation shall be a standing height, four legged, freestanding table. The table shall be nominally 60" (1,524mm) long, 24" (609.6mm) deep, and 36" (914.4mm) high (see Figure 13). Leg and apron size and construction shall be to manufacturer's specification. A top of 1" (25.4mm) thick 37 - 50 pcf medium density fiberboard shall be mounted on the table in the manner recommended by the manufacturer. The top dimensions will be such that it will overhang the cabinet perimeter by 1". Its weight shall be included in the test as live load.

A very large range of styles and designs can represent tables. Products inclusive in this section of testing are: Free Standing Tables, Desks, Aprons mounted between two fixed areas such as a wall or Casework, Mobile Tables (Free Standing Tables on wheels or casters), Mobile Under Counter Units, Mobile Workstations, Adjustable Tables, Modular Tables, C-Frame Tables, L-Frame Tables, J-Frame Tables, and Tables for systems furniture. These table systems can all be classified as one of three types of tables; Fixed, Free Standing, and mobile. See Figure 13.

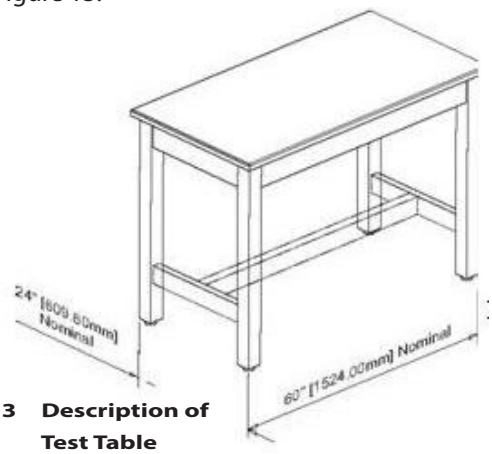

Fig 13 Description of Test Table

10.2 Table Static Load

10.2.1 Purpose of Test

This test will challenge the table components to loads that are normal for use in a laboratory.

10.2.2 Test Procedure

Load the table top by using solid steel bars (per Section 3.1), each weighing 50 pounds (22.679 Kg), stacked evenly and spaced per Figure 14. Load the table to the manufacturer's recommended live load*. These evenly distributed loads should be no less than 300 pounds (136.077 Kg) for mobile, 600 pounds (272.155 Kg) for free standing and 2000 pounds (907.184 Kg) for fixed. Include the weight of the working surface as live load.

** Table load will vary considerably. Factors impacting live load capability include the size of the table, material, amount of drawers and book compartments, glide or caster load rating. Contact manufacturer for live load specifications.* See Fig 14.

© SEFA - 5th Edition Desk Reference - Version 3.0

Fig 14 Table Static Load Test Configuration

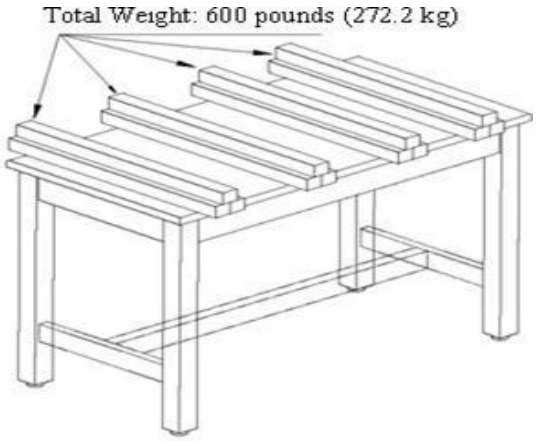

10.2.3 Acceptance Level

No structural breakage shall result from application of the load. With the full load, the apron rails shall not deflect more than 1/360 of the span of the table and not to exceed 1/8" (3.175mm). In the case of a table with a drawer, the deflection of the rail shall not interfere with the function of the drawer. After the load is removed, inspect the table for structural damage.

10.3 Table Racking

10.3.1 Purpose of Test

This test will demonstrate the structural integrity of the table construction when subjected to a racking load. Most racking failures occur upon dragging an unloaded table across a floor. The ability of a table to resist a racking load will indicate less damage to the structure. The following tests were based on and adapted from ANSI/BIFMA X5.5-1989 American National Standard for Office Furnishings "Desk Products-Tests." Adjustments have been made to better accommodate the specific applications of tables used in laboratories.

10.3.2 Test Procedure

The table shall have a common two-by-four wood rail clamped on the centerline of the top parallel to the ends of the table. The table shall then be positioned at 45º, with one pair of legs on the floor and the other raised and supported (see Figure 15). To prevent the table from tipping over, attach a cable to the end rail of the table and to the wall. The attachment of the cable at the wall must be equal to or less than the height of the attachment at the table. The table shall then have 250 pounds (113.398 Kg) of weight (five 50-pound (22.679 Kg) bars) placed on its top and held in place by the two-by-four wood rail. The unit shall remain in this position for seventy-two hours. The unit shall be lowered without shock to the leveled surface and the general operation of the drawers shall be evaluated.

Fig 15 Table Racking Test Configuration

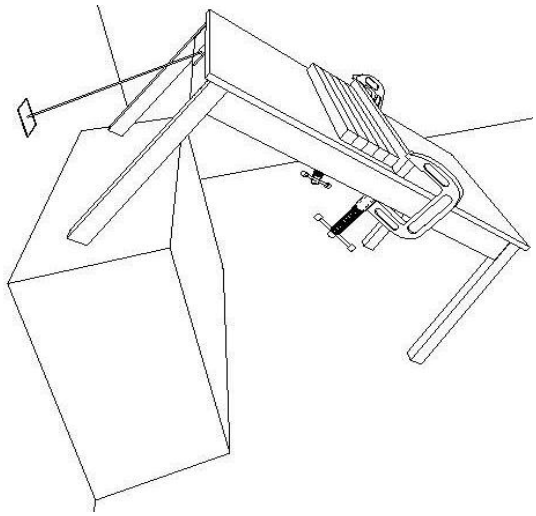

10.3.3 Acceptance Level

When returned to normal position, the operation of the table shall be normal, and there will be no permanent damage.

Endnotes:

1 Webster's Ninth New Collegiate Dictionary, 1988, p 980.

2ANSI/BHMA: http://buildershardware.com Standard A156.9-2007 (American National Standard for Cabinet Hardware)

3ANSI/NEMA: http://www.nema.org Standard LD-3 2005 (High-Pressure Decorative Laminate)

LABORATORY FURNITURE
CERTIFICATE OF PERFORMANCE

_____ certifies that its laboratory furniture identified as
(Company Name)

_____ , has been tested in conformance with the full requirements
(Test Unit)
of the **SEFA 8-PL-2020 Recommended Practices**. Testing was performed by a SEFA-approved Independent Third Party Test Lab with results noted below.

Full documentation of the test results is available upon request in a bound report that includes a detailed description of the test unit and procedures, witnesses results and appropriate drawings or photographs of the test unit and procedures.

TEST	TEST RESULTS PASS/FAIL	TEST	TEST RESULTS PASS / FAIL	TEST	TEST RESULTS PASS / FAIL
4.2		6.3		8.7	
4.3		6.4		8.8	
4.4		6.5		8.9	ANSI/NEMA LD-3-2005 ¶ 3.13
4.5		7.2		9.2	
5.1		8.1	*See Attached Form*	10.2	
5.1		8.2	ANSI/NEMA LD-3-2005 ¶ 3.5	10.3	
5.3		8.3	ANSI/NEMA LD-3-2005 ¶ 3.8		
6.1		8.6	ANSI/NEMA LD-3-2005 ¶ 3.5		

COMPANY INFORMATION	TEST SUPERVISOR INFORMATION
Name:	Name:
Address:	Title:
	Signature:
Telephone:	**COMPANY OFFICER INFORMATION**
Fax:	Name:
	Title:
Date:	Signature:

© SEFA - 5th Edition Desk Reference - Version 3.0

CHEMICAL RESISTANCE TESTING – 8-PL-2020

Date of Test: _____ Sample Description: _____

Type of Material Coated: _____ Coating Type: _____

Rating Scale: Level 0 – No Detectable Change
Level 1 – Slight Change in Color or Gloss
Level 2 – Slight Surface Etching or Severe Staining
Level 3 – Pitting, Cratering, Swelling, Erosion of Coating. Obvious and Significant Deterioration.

Test No.	Chemical Reagent	Rating	Comments
1.	Acetate, Amyl		
2.	Acetate, Ethyl		
3.	Acetic Acid, 98%		
4.	Acetone		
5.	Acid Dichromate, 5%		
6.	Alcohol, Butyl		
7.	Alcohol, Ethyl		
8.	Alcohol, Methyl		
9.	Ammonium Hydroxide, 28%		
10.	Benzene*		
11.	Carbon Tetrachloride		
12.	Chloroform		
13.	Chromic Acid, 60%		
14.	Cresol		
15.	Dichloroacetic Acid		
16.	Dimethylformamide		
17.	Dioxane		
18.	Ethyl Ether		
19.	Formaldehyde, 37%		
20.	Formic Acid, 90%		
21.	Furfural		
22.	Gasoline		
23.	Hydrochloric Acid, 37%		
24.	Hydrofluoric Acid, 48%		
25.	Hydrogen Peroxide, 30%		
26.	Iodine, Tincture of		
27.	Methyl Ethyl Ketone		
28.	Methylene Chloride		
29.	Mono Chlorobenzene*		
30.	Naphthalene		
31.	Nitric Acid, 20%		
32.	Nitric Acid, 30%		
33.	Nitric Acid, 70%		
34.	Phenol, 90%		
35.	Phosphoric Acid, 85%		
36.	Silver Nitrate Saturated		
37.	Sodium Hydroxide 10%		
38.	Sodium Hydroxide 20%		
39.	Sodium Hydroxide 40%		
40.	Sodium Hydroxide Flake		
41.	Sodium Sulfide Saturated		
42.	Sulfuric Acid, 33%		
43.	Sulfuric Acid, 77%		
44.	Sulfuric Acid, 96%		
45.	Sulfuric Acid 77%& Nitric Acid 70% equal parts		
46.	Toluene		
47.	Trichloroethylene		
48.	Xylene		
49.	Zinc Chloride, Saturated		

TEST PERFORMED BY: _____ DATE: _____

Scientific Equipment & Furniture Association
Recommended Practices

SEFA 8P-2020
Laboratory Grade Polypropylene Casework

SEFA World Headquarters
65 Hilton Avenue
Garden City, NY 11530

Tel: 516-294-5424
www.sefalabs.com

SEFA SPELLS SAFE

Table Of Contents

	Page
Committee Members	**323**
Foreword	**324**
Sections	
1.0 Scope	**325**
2.0 Purpose	**325**
3.0 Definitions	**325**
3.1 Description of Testing Apparatus	
4.0 Base Cabinets	**328**
4.1 Description of Test Unit	
4.2 Cabinet Load Test	
4.2.1 Purpose of Test	
4.2.2 Test Procedure	
4.2.3 Acceptance Level	
4.3 Cabinet Concentrated Load Test	
4.3.1 Purpose of Test	
4.3.2 Test Procedure	
4.3.3 Acceptance Level	
4.4 Cabinet Torsion	
4.4.1 Purpose of Test	
4.4.2 Test Procedure	
4.4.3 Acceptance Level	
4.5 Cabinet Submersion Test	
4.5.1 Purpose of Test	
4.5.2 Test Procedure	
4.5.3 Acceptance Level	
4.6 Spill Containment Test	
4.5.1 Purpose of Test	
4.5.2 Test Procedure	
4.5.3 Acceptance Level	
5.0 Doors	**330**
5.1 Door Hinge Test	
5.1.1 Purpose of Test	
5.1.2 Test Procedure	
5.1.3 Acceptance Level	
5.2 Door Impact Test	
5.2.1 Purpose of Test	
5.2.2 Test Procedure	
5.2.3 Acceptance Level	
5.3 Door Cycle Test	
5.3.1 Purpose of Test	
5.3.2 Test Procedure	
5.3.3 Acceptance Level	
6.0 Drawers	**331**
6.1 Drawer Static Test	
6.1.1 Purpose of Test	
6.1.2 Test Procedure	
6.1.3 Acceptance Level	
6.2 Drawer and Door Pull Test	
6.2.1 Purpose of Test	
6.2.2 Test Procedure	
6.2.3 Acceptance Level	
6.3 Drawer Impact Test	
6.3.1 Purpose of Test	
6.3.2 Test Procedure	
6.3.3 Acceptance Level	
6.4 Drawer Internal Impact Test	
6.4.1 Purpose of Test	
6.4.2 Test Procedure	
6.4.3 Acceptance Level	
6.5 Drawer Cycle Test	
6.5.1 Purpose of Test	
6.5.2 Test Procedure	
6.5.3 Acceptance Level	

Table Of Contents (cont'd)

Page

7.0 Shelving 333

7.1 Description of Test Unit

7.2 Shelf Load Test
7.2.1 Purpose of Test
7.2.2 Test Procedure
7.2.3 Acceptance Level

8.0 Cabinet Surface Finish Tests 334

8.1 Chemical Spot Test
8.1.1 Purpose of Test
8.1.2 Test Procedure
8.1.3 Acceptance Level

8.2 Hot Water Test
8.2.1 Purpose of Test
8.2.2 Test Procedure
8.2.3 Acceptance Level

8.3 Impact Test
Not applicable to Polypropylene

8.4 Paint Adhesion Test
Not applicable to Polypropylene

8.5 Paint Hardness Test
Not applicable to Polypropylene

8.6 Dart Impact Test
Not applicable to Polypropylene

8.7 Edge Delaminating Test
Not applicable to Polypropylene

8.8 Edge Impact Test
Not applicable to Polypropylene

8.9 Wear Resistance (Abrasion) Test
Not applicable to Polypropylene

Page

9.0 Wall Cabinets, Counter Mounted and Tall Units 339

9.1 Description of Test Unit

9.2 Load Test
9.2.1 Purpose of Test
9.2.2 Test Procedure
9.2.3 Acceptance Level

10.0 Tables 340

10.1 Description of Test Unit

10.2 Load Test
10.2.1 Purpose of Test
10.2.2 Test Procedure
10.2.3 Acceptance Level

10.3 Table Racking
Not applicable to Polypropylene

Endnotes 341

Forms 342

© SEFA - 5th Edition Desk Reference - Version 3.0

SEFA 8-P Committee Members

Committee Co-Chairs

Ken Dixon - Air Control, Inc.

Frank Conner - TFI Inline Design, Inc.

L M Air Technology, Inc.

Foreword

SEFA Profile

The Scientific Equipment and Furniture Association (SEFA) is an international trade association comprised of manufacturers of laboratory furniture, casework, fume hoods and members of the design and installation professions. The Association was founded to promote this rapidly expanding industry and improve the quality, safety and timely completion of laboratory facilities in accordance with customer requirements.

SEFA Recommended Practices

SEFA and its committees are active in the development and promotion of Recommended Practices having domestic and international applications. Recommended Practices are developed by the association taking into account the work of other standard writing organizations. Liaison is also maintained with government agencies in the development of their specifications.

SEFA's Recommended Practices are developed in and for the public interest. These practices are designed to promote a better understanding between designers, architects, manufacturers, purchasers, and end-users and to assist the purchaser in selecting and specifying the proper product to meet the user's particular needs. SEFA's Recommended Practices are periodically updated. The Recommended Practices are numbered to include an annual suffix which reflects the year that they were updated. SEFA encourages architects to specify these Recommended Practices as follows: "SEFA 8P-2020".

SEFA Glossary of Terms

SEFA has developed a Glossary of Terms (SEFA 4-2020) for the purpose of promoting a greater understanding between designers, architects, manufacturers, purchasers and end users. The terms defined by SEFA are frequently used in contracts and other documents, which attempt to define the products to be furnished or the work involved. The Association has approved this Glossary in an effort to provide uniformity among those who use these terms. Where a specific Recommended Practice contains definitions which differ from those in the Glossary of Terms, then the definitions in the specific Recommended Practice should be used.

SEFA encourages all interested parties to submit additional terms or to suggest any changes to those terms already defined by the Association. The definitions should be used to help resolve any disputes that may arise or to incorporate the applicable terms in any contract or related documents.

SEFA Disclaimer

SEFA uses its best effort to promulgate Recommended Practices for the benefit of the public in light of available information and accepted industry practices. SEFA does not guarantee, certify or assure the safety or performance of any products, components, or systems tested, installed, or operated in accordance with SEFA Recommended Practices or that any tests conducted under its Recommended Practices will be non-hazardous or free from risk. SEFA encourages the use of third party independent testing where appropriate.

Note : ***Testing as described in this document must be performed and documented by a SEFA-approved third party testing facility. See Page 36 of the SEFA Desk Reference 5th Edition Version 3.0, or visit us at SEFALABS.COM for the most current list of SEFA-approved test labs.***

© SEFA - 5th Edition Desk Reference - Version 3.0

1.0 Scope

The scope of this document is intended to provide manufactures, specifiers, and users tools for evaluating the safety, durability, and structural integrity of polypropylene laboratory grade furniture and complimentary items. This document is inclusive of casework (base units, wall mounted units, counter mounted units, tall units, tables and, shelving systems). Casework, tables, and shelving manufactured for laboratory use should be subjected to the tests and procedures outlined below.

Polypropylene laboratory grade casework shall consist of base cabinets, wall cabinets, counter mounted cabinets, tall cabinets, tables, and shelving.

Aggregate test results may vary by manufacturer. Procedures for testing performance criteria shall be as outlined in this document and results made available upon request. It is assumed that the test model reflects the performance criteria for all products. However there may be certain door/ drawer configurations and/or sizes outside the test unit configuration identified that may not meet certain parts of this test. A test unit has been identified in this document with the sole purpose of obtaining continuity of procedures and results in a scientific format.

Great care should be exercised when heavy loads are applied to the cabinet and appropriate safety precautions taken to insure safety of testing personnel. Properly trained personnel should perform all tests. SEFA assumes no liability for damage or injury as a result of conducting these tests.

The acceptance levels are based on the cumulative field experience and laboratory testing of SEFA members based on actual needs of laboratories. This is a performance- based document. Specifications proscribing specific materials, hardware, finishes, workmanship or construction may or may not meet acceptance levels of this document. If proscriptive components of the specifications conflict with compliance of this document then the Architectural proscribed elements take precedent.

Testing as outlined in this document must be performed and documented by a SEFA-approved independent third party testing facility.

2.0 Purpose

The purpose of this document is to describe the distinguishing performance characteristics of laboratory grade polypropylene furniture and complimentary items. Furniture shall be of a type specifically designed and manufactured for installation and use in a laboratory.

Although aggregate test results may vary from manufacturer to manufacturer, procedures for testing performance criteria shall be as outlined in this document and results made available upon request. It is assumed that the test model reflects the performance criteria for all products regardless of construction, size, or style used. A test unit has been identified in this document with the sole purpose of obtaining continuity for procedures and results in a scientific format.

3.0 Definitions

Acceptance Levels - The acceptance level for each performance criteria is based on the cumulative experience of actual field testing and laboratory results of SEFA members. Acceptance levels describe the expected outcome of each test procedure.

ANSI/BIFMA - ANSI is the American National Standards Institute. Approval of an American National Standard requires verification by ANSI that the requirements for due process, consensus, and other criteria for approval have been met by the standards developer. BIFMA is the Business and Institutional Furniture Manufacturer's Association, an association of manufacturers of desk products and the like.

Apparatus - A machine or group of machines and accessories.

Arithmetic Mean - A number obtained by dividing the sum of a set of quantities by the number of quantities in a set; average.

ASTM - American Society for Testing and Materials.

Base Cabinets - A base cabinet is a storage device consisting of two ends, a back, a face and may or may not include a top or top frame. The face may be open, to access the storage area, or may be outfitted with one or more drawers and/or doors. A base cabinet is always placed on the floor and normally supports a surface. The top surface is normally no more than 42" (1,067mm) off the floor surface.

Best Practices - When given a choice of grade, the "best practice" is to select one that offers a well defined degree of control over the quality of workmanship, materials, and installation of a project. SEFA-8 Recommended Practices are written from a view of high quality laboratory furniture.

Cabinet Depth (Deep) - Given a front, bottom, two sides, and a top, the cabinet depth is a measure of the side of the cabinet, in its normal upright position, from the outside back to the outside front excluding doors and door fronts.

Cabinet Height (High) - Given a front, bottom, two sides, and a top, the cabinet height is a measure of the side of the cabinet, in its normal upright position, from the bottom edge of the side to the top, excluding any surface.

Cabinet Width (Wide) - Given a front, bottom, two sides, and a top, the cabinet width is a measure of the front of the cabinet in its normal upright position from one side to the other.

Casework - Base and wall cabinets, display fixtures, and storage shelves. The generic term for both "boxes" and special desks, reception counters, nurses stations and the like. Generally includes the tops and work surfaces.

Chase (Plumbing Area) - Space located behind the back of the base cabinet used to house plumbing or electric lines.

Combination Unit - A base unit of the type that has both door(s) and drawer(s).

Counter Mounted Cabinet - A counter mounted cabinet is a wall cabinet (usually with a height of approximately 48" [1,219mm] and is typically mounted on the work surface or shelf, as in a reagent shelf).

Cupboard (Door Unit) - That portion of the cabinet with no drawer(s) that may be enclosed by doors.

Drawer - A sliding storage box or receptacle opened by pulling out and closed by pushing in.

Free Standing - Requiring no support or fastening to other structures.

Hardware - Items such as screws, pulls, hinges, latches, locks, and drawer slides used in the construction of casework.

Joinery – The junction of two pieces intended to be permanently connected.

Laboratory Furniture - Furniture designed and manufactured for installation and use in a laboratory.

Latch - A piece of hardware designed to hold a door closed.

Leveling Screws (Levelers) - Threaded components designed to allow adjustment of the cabinet vertically as needed for leveling.

Nominal Dimensions - Not all cabinet manufacturers produce product to the identical dimensions. All dimensions given in this document are accurate to within five percent, which is considered nominal.

Permanent Damage - Destruction to material or joinery that would require repair in order to return to its original state.

Permanent Deformation - Deflection that has exceeded the limits of the product, thus changing the original shape of the product

Permanent Deterioration - Erosion or corrosion of material such that the component will never return to its original shape.

© SEFA - 5th Edition Desk Reference - Version 3.0

Permanent Failure - See "permanent damage."

Pulls - Articles of hardware used to grasp and open/close the door or drawer (see also hardware).

Rack Resistance - The ability of a product to resist stresses that tend to make the product distort and the drawers to become misaligned.

Rail - A horizontal member extending from one side of the cabinet to the other.

Reagent - A substance used because of its chemical or biological activity.

Removable Back - A panel located on the inside back of the base cabinet, which is removable in order to gain access to utilities.

Submersion - Covered with water.

Tables - An article of furniture having a flat, horizontal surface supported by one or more support members (legs), and a frame (apron).

Tall Cabinet (Full Height Unit) - A tall cabinet is a storage device that consists of two ends, a top and bottom panel, a back and a face. The face may be open to access the storage area or may be outfitted with one or more drawers and/or door(s). A tall cabinet is always placed on the floor and is nominally 84" (2,134mm) high.

Torsion – A force acting at a distance which tends to twist or rotate an object or cabinet.

Uniformly Distributed – A force applied evenly over the area of a surface.

Unobstructed Entry - A cabinet is deemed to be unobstructed if access to the entire storage area is completely without obstacle.

Upright Position - A cabinet oriented in its intended position.

Wall Cabinet - A wall cabinet is a storage device consisting of two ends, a back, a top, bottom, and a face. The face may be open to access the storage area or may be outfitted with one or more door(s). The wall cabinet usually does not include a drawer. A wall cabinet is always mounted on a vertical surface such as a wall, a divider, panel or some other vertical structure. A wall cabinet is usually less than 48" (1,219mm) high.

Work Surface - A normally horizontal surface used to support apparatus at a convenient height above the floor. Work surfaces are normally positioned atop a base cabinet or table structure.

3.1 Description of Testing Apparatus

Solid Steel Bar - A square solid steel bar 2 1/2" (63mm) square, 28 1/4" (717mm) long, weighing 50 pounds (22.679 Kg).

Sand or Shot Bag (10 pounds [4.545 Kg]) - A bag of plastic or cloth with the approximate dimensions 10 9/16" (268mm) x 11" (279mm) as in typical "gallon size re-closable stor-age bags." Filled with enough sand or shot so that contents weigh 10 pounds (4.545 Kg).

Sand Bag (20 pounds [9.071 Kg]) - Two 10 pound (4.545 Kg) sand bags bound together.

Shot Bag (100 lbs. [45.359 Kg]) - A plastic or cloth bag of sufficient size to contain 100 pounds (45.359 Kg) of shot.

Cycling Mechanism - Per ANSI BHMA 156.9.-2003

Steel Rod - A 2" (51mm) diameter by 12" (305mm) long rod, approximately 10 pounds (4.535 Kg) in weight.

Hot Water - To be considered "hot water," the temperature of the water must be between 190° F to 205° F (88° C to 96° C).

One Pound Ball - Solid steel sphere approximately 2" (51mm) in diameter.

Hardwood Corner Block - A block of hardwood 2" (51mm) square by 1" (25.4mm) high.

4.0 Base Cabinets

4.1 Description of Test Cabinet

The base cabinet shall be a combination of doors and drawers per Figure 1. The base cabinet shall have nominal dimensions of 48" (1,219.2mm) wide, 36" (914.4mm) high, and 22" (558.8mm) deep. The drawers shall be above the doors, half width and approximately one-fourth the height of the cabinet's face opening. The cabinet back shall be the removable type (per manufactures' standard design as used for access to the plumbing or chase area) with the removable panel removed.

The cabinet shall be free standing, squared and leveled. For purposes of testing, the cabinet shall be squared and leveled and sitting 1" (25.4mm) off the floor atop four hardwood corner blocks 2" (50.8mm) square and 1" (25.4mm) high. A top of 1" (25.4mm) thick 37-50 pcf medium density fiberboard shall be positioned on the cabinet without glue or fasteners of any kind. The top dimensions will be such that it will overhang the cabinet perimeter by 1" (25.4mm). Its weight shall be included in the test as live load.

Figure 1
Description of Base Cabinet

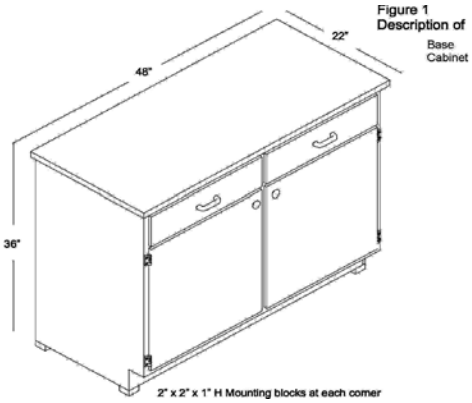

Before conducting the test, a visual examination shall be conducted to verify that the unit configuration and setup conditions are appropriate. Operate doors and drawer. Doors should be free moving and latch properly. Inspect the unit for dimensions and note the fit of doors and drawers to the cabinet body. Open and close the drawer. The drawer should be free moving and function as specified by the manufacturer. Discontinue evaluation if unit is not in compliance or if malfunction is noted.

4.2 Cabinet Load Test -

4.2.1 Purpose of Test

The cabinet load test will challenge the structural integrity and load bearing capability of the cabinet construction. This test will demonstrate the ability of the cabinet to support heavy applied loads. This is not intended to test the functional characteristics of the cabinet under heavy loads.

4.2.2 Test Procedure

Verify that the cabinet is level. Remove drawer and open doors for testing purpose. Load the cabinet top by using 1600 pounds (725.755 Kg) of solid steel bars (per Section 3.1) stacked in an evenly distributed manner across the entire top surface, per Figure 2. After ten minutes unload the cabinet.

Figure 2
Cabinet Load Test Configuration

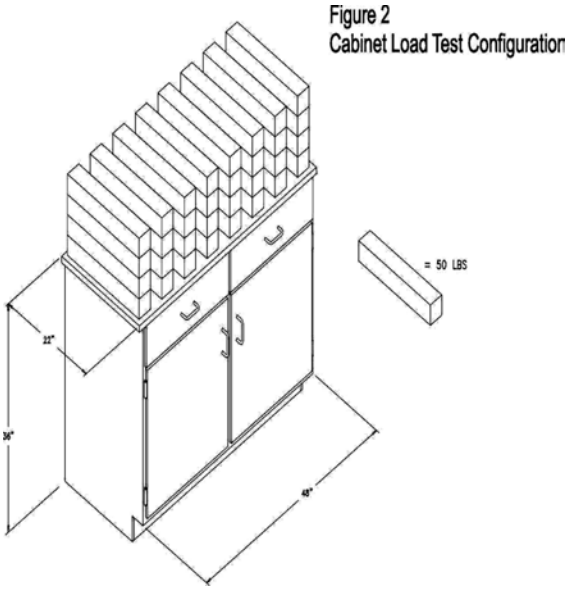

4.2.3 Acceptance Level

The cabinet will have no permanent failure.

4.3 Cabinet Concentrated Load Test

4.3.1 Purpose of Test

The purpose of this test is to challenge the functional characteristics of the cabinet when subjected to a concentrated load on the center of the cabinet top.

© SEFA - 5th Edition Desk Reference - Version 3.0

4.3.2 Test Procedure

Using solid weights or 10 pound (4.535 Kg) sand bags (per Section 3.1), apply a total of 160 pounds (72.576 Kg) to the top of the cabinet along the cabinet centerline (see Figure 3). Operate doors and drawers.

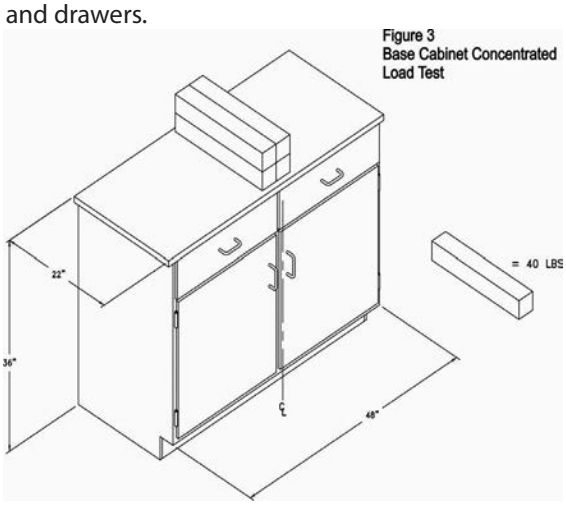

Figure 3
Base Cabinet Concentrated Load Test

4.3.3 Acceptance Level

Under condiion of test load, doors and drawers shall operate normally. There shall be no permanent distortion to front rail, cabinet joinery, doors or drawers.

4.4 Cabinet Torsion

4.4.1 Purpose of Test

This test will evaluate the structural integrity of the cabinet construction when subjected to a torsional load.

4.4.2 Test Procedure

The cabinet shall be tested in its normal upright position, raised not less than four-inches off the floor and supported on rear and one front corner. The area of support under the cabinet shall be located not more than 6" (152.4 mm) in from each supported corner. Secure the cabinet diagonally from the unsupported corner with solid steel bars or sand bags per Section 3.1, 280 pounds (127.27 Kg) of weight on the top of the cabinet to prevent overturning. Apply solid weights or sand bags to achieve 160 pounds of weight [72.73 Kg] to the unsupported corner for a period of fifteen minutes (see: Figure 4). Remove weight and place cabinet on the floor in its normal upright position. Observe cabinet joinery. Level the cabinet and measure the face and back of the cabinet across the diagonal corners.

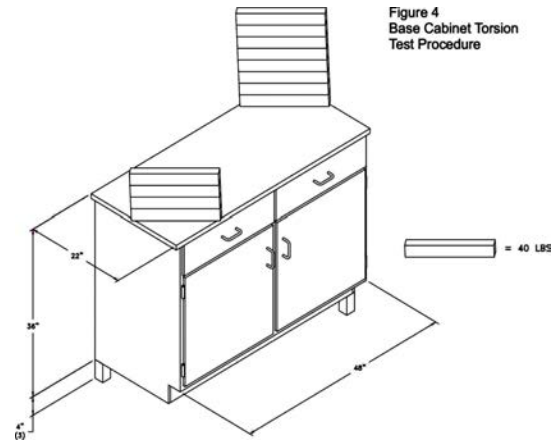

Figure 4
Base Cabinet Torsion Test Procedure

4.4.3 Acceptance Level

When returned to normal position, the operation of the cabinet shall be normal, and there will be no permanent damage. The difference between the two measurements taken from measuring the diagonal corners shall be no more than 1/8" (3.175mm).

4.5 Cabinet Submersion Test

4.5.1 Purpose of Test

This test will demonstrate the ability of a cabinet to resist wicking of moisture from the floor. Only units that rest on the floor or a unit where the base is within 2" (50.8mm) of the floor should be subjected to this test.

4.5.2 Test Procedure

The material thickness along the perimeter of the cabinet shall be measured on 6" (152.4mm) increments. Record the thickness of the material to be submerged in water. Calculate the arithmetic mean of the data taken. Place the entire test cabinet in its upright position such that the cabinet is submerged in a deep pan so that the cabinet is in 24" (609.6mm) of water. After four hours, remove the unit from the water and immediately measure the thickness of the material at the same points measured initially. Calculate

the new arithmetic mean. After the unit has been allowed to dry, inspect for other damage.

4.5.3 Acceptance Level

The cabinet will show no permanent deformation or deterioration. Increase in thickness shall not exceed four percent of the initial mean measurements.

4.6 Spill Containment Test

4.6.1 Purpose of Test

This test will demonstrate the ability of a cabinet to hold standing water. Any polypropylene cabinet, be it floor mounted, wall case, or under counter mount, should have the ability to hold said water, for an infinite amount of time.

4.6.2 Test Procedure

The cabinet shall be tested in its normal upright position, raised not less than four-inches off the floor, and supported level. The supports should be stationed away from all weld seam areas, on the underside. Fill cabinet with water, engulfing whole bottom, to within 1/8" of top, of bottom rail. Let stand for one hour. Inspect for water droplets, if droplets found, mark area on cabinet, with colored tape, grind out weld, re-weld, and repeat procedure.

4.6.3 Acceptance Level

The cabinet will show no signs of leakage, and have no gaps, or voids in weld seams. The cabinet will show no signs of permanent deformation or deterioration.

5.0 Doors

5.1 Door Hinge Test

5.1.1 Purpose of Test

This test will demonstrate the durability of the door and its hardware (hinge leaf, screws, etc.) to an applied load of 120 pounds (54.43 Kg).

5.1.2 Test Procedure

With unit and top set as described in Section 4.1, add sufficient weight to the top in order to prevent overturning. With cabinet door opened 90-degrees, hang a sling made up of sand bags of 120 pounds (54.43 Kg) weight over top of the door at a point 12" (304.8mm) out from the hinge centerline (see Figure 5). Slowly move door through the full cycle of the hinge, up to a 160-degree arc. Remove weight and swing door through its full intended range of motion and close door.

Figure 5
Base Cabinet Door
Load Test Configuration

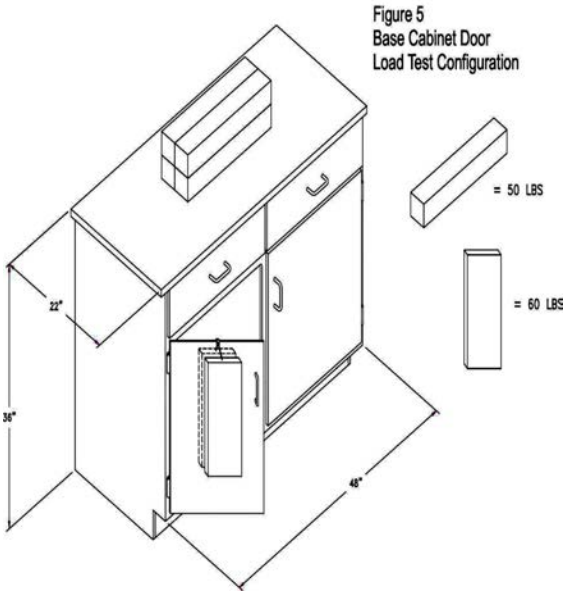

5.1.3 Acceptance Level

The open door shall withstand a load of 120 pounds (54.43 Kg) when applied at a point 12" (304.8mm) from the hinge centerline without significant permanent distortion. Operation of the door, after test, shall show no significant permanent distortion that will cause binding of the door or hinges or that will adversely affect operation of the catch.

5.2 Door Impact Test

5.2.1 Purpose of Test

This test will demonstrate the resistance of a 190 inch-pound impact to the door face. Only units that extend below the work surface should be

© SEFA - 5th Edition Desk Reference - Version 3.0

subjected to this test. This test should not be inclusive of glass doors.

5.2.2 Test Procedure

With unit and top set as described in Section 4.1, add sufficient weight to the top in order to prevent overturning. A 10 pound (4.534 Kg) sand bag (per Section 3.1) shall be suspended and dropped to provide an impact of 190 inch-pounds at the center of the closed door (see Figure 6).

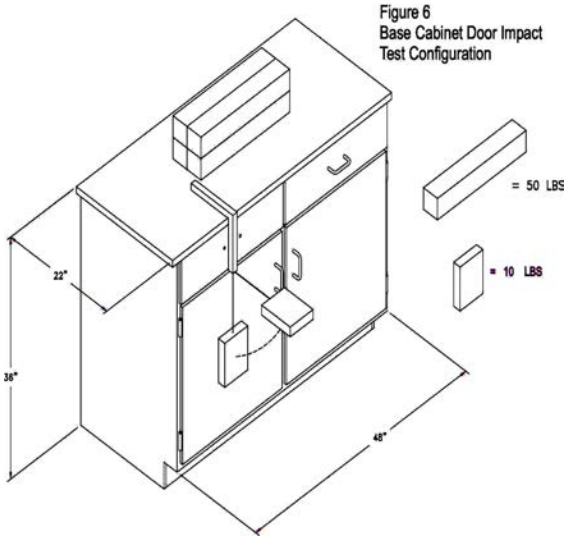

Figure 6
Base Cabinet Door Impact
Test Configuration

5.2.3 Acceptance Level

After the test, the door and catch shall operate normally and show no permanent damage.

5.3 Door Cycle Test

5.3.1 Purpose of Test

This test will demonstrate the durability of the door hinge hardware to withstand 50,000 cycles as a reliable measure for longevity.

5.3.2 Test Procedure

This test shall be in conformance to the ANSI test procedure A156.9, Grade 1, requirements for cycle testing of doors. A cycling mechanism shall swing door 90-degrees. Door shall operate for 50,000 cycles with a speed not greater than 8 cycles per minute.

5.3.3 Acceptance Level

Door shall operate for the full cycle period without deterioration that will significantly affect the function of the door. The door shall operate freely without binding.

6.0 Drawers

6.1 Drawer Static Test

6.1.1 Purpose of Test

This test will demonstrate the ability to support a point load given to the front of the drawer and will challenge the attachment of the drawer head to the drawer.

6.1.2 Test Procedure

With unit and top set as described in Section 4.1, add sufficient weight to the top in order to prevent overturning. Open the drawer to 13" (330.2mm) of travel and hang 120 pounds (54.43 Kg) from the drawer head at the centerline of the drawer for five minutes (see Figure 7). Remove the weight and operate the drawer through the full cycle.

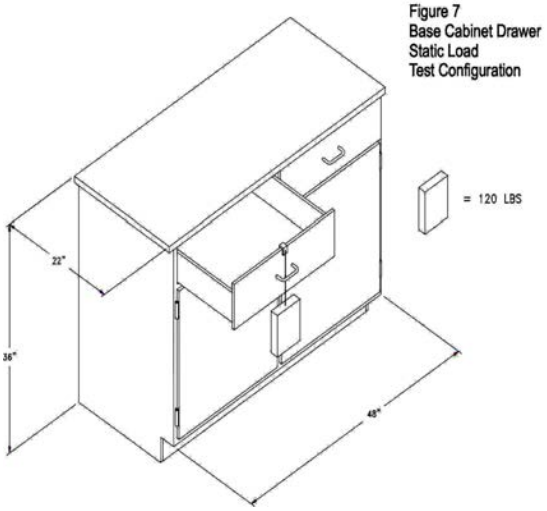

Figure 7
Base Cabinet Drawer
Static Load
Test Configuration

6.1.3 Acceptance Level

There shall be no interference with the normal operation of the drawer.

6.2 Drawer and Door Pull Test

6.2.1 Purpose of Test

This test will evaluate the strength of the pull and pull hardware.

6.2.2 Test Procedure

Pulls are to be installed in accordance with manufacturer's practice using specified attaching hardware and method. Block door and drawer closed. Using a cable, pulley and weight assembly (see Figure 8), apply a force of 40 pounds (18.144 Kg) perpendicular to each pull. Revise setup

Figure 8
Base Cabinet Door and Drawer
Pull Horizontal Load Configuration

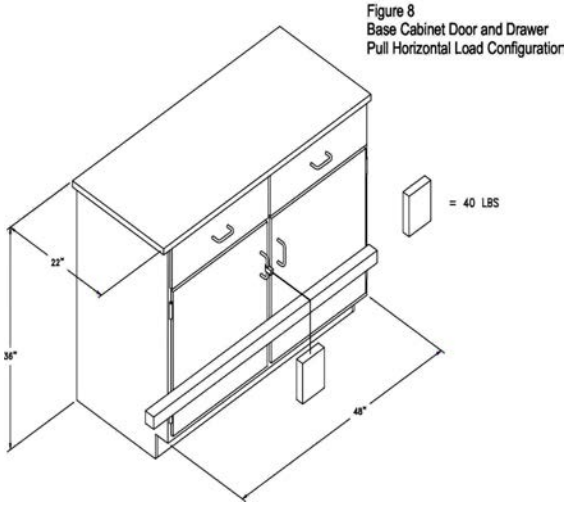

to hang weight from each pull (see Figure 9). Remove weight.

Figure 9
Base Cabinet Door and Drawer Pul
Vertical Load Test Configuration

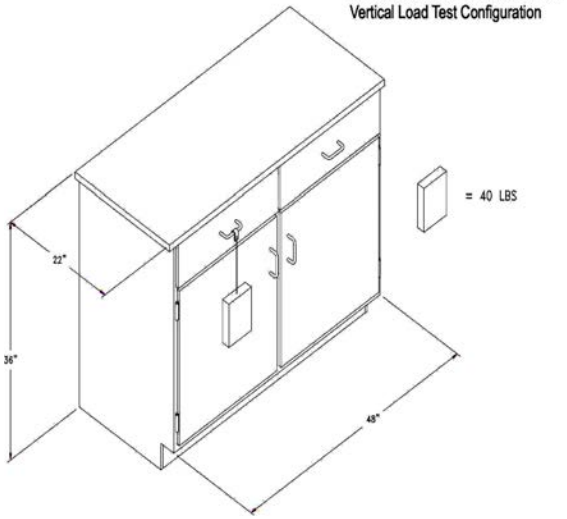

6.2.3 Acceptance Level

Pulls shall resist force and support weight without breakage. After completion of test and removal of weight, there shall be no significant permanent distortion. Some pull designs will require variations to set up apparatus. These pulls shall be tested in conformance to the applied pull forces.

6.3 Drawer Impact Test

6.3.1 Purpose of Test

This test will demonstrate the resistance to impact of the drawer bottom and slide mechanism.

6.3.2 Test Procedure

Open drawer to 13" (330.2mm) of travel. Drop an 8 pound (3.629 Kg) sand or shot bag from a height of 24" (609.6mm) into the bottom of a drawer at the center of the width of the drawer and 6" (152.4mm) back from the inside face of the drawer. Remove the sand or shot bag.

6.3.3 Acceptance Level

Operate drawer through full cycle. Drawer shall operate normally. Any deformation will not cause binding or interfere with the operation of the drawer.

6.4 Drawer Internal Rolling Impact Test

6.4.1 Purpose of Test

This test will evaluate the strength of the drawer head, bottom, and back as a result of opening and closing the drawer with a rolling load.

6.4.2 Test Procedure

Position the drawer on a table at a 45-degree angle per Figure 10. Place a 2" (50.8mm) diameter by 12" (304.8mm) long steel rod (approximately 10 pounds [4.536Kg]) 13" (330.2mm) from the target impact area such that the rod will roll freely to impact the back of the drawer. Subject the back to three impacts and reverse the drawer to subject the front to three additional impacts.

© SEFA - 5th Edition Desk Reference - Version 3.0

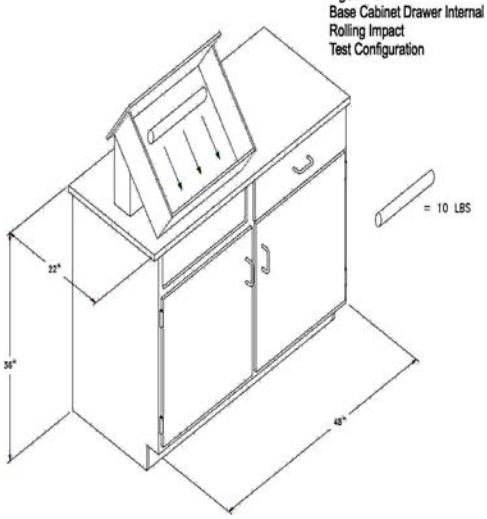

Figure 10
Base Cabinet Drawer Internal
Rolling Impact
Test Configuration

6.4.3 Acceptance Level

The drawer shall show no permanent damage. All joinery shall be intact and the drawer, when replaced in the unit, shall operate normally. Minor scratches and dents are acceptable.

6.5 Drawer Cycle Test

6.5.1 Purpose of Test

This test is intended to replicate years of operation of a drawer under a load.

6.5.2 Test Procedure

Laboratory Load (10 pounds [4.535 Kg]) - A static load of 10 pounds (4.535 Kg) (using a ten 10 pound [4.359 Kg] sand bag per Section 3.1) shall be uniformly distributed in the drawer. Measure force required to activate the drawer. Operate from a closed position to within 1/4" (6.35mm) of full extension for 25,000 cycles at a rate not to exceed 4 cycles per minute.

6.5.3 Acceptance Level

The drawer shall operate freely without evidence of dragging rubbing or binding. The force required to open and close loaded drawer shall not be more than a 20% increase of that required prior to test and shall not be greater than 8 pounds (3.487 Kg) to activate hardware.*

**** The American's with Disabilities Act (ADA) requires a force no greater than five pounds to activate hardware. The load rating in this document is intended only for testing conditions where loads challenge the durability of the hardware. Under actual conditions, drawer loading should be reduced to levels that result in compliance with ADA as applicable.***

7.0 Shelving

7.1 Description of Test Unit

Shelves shall be tested using the following procedure. This is inclusive of shelves in wall cabinets, counter mounted cabinets, full height cabinets, wall mounted shelves and free standing shelves. Typical thicknesses are 1/2" for most applications. Shelves to have lips on at least two sides. Other factors that should be evaluated when selecting shelving include chemical resistance, impact resistance, color and appearance, abrasion resistance, cost, and support requirements. Consult with the manufacturer for assistance with these other criteria.

7.2 Shelf Load Test

7.2.1 Purpose of Test

This test will demonstrate the ability of a shelf and its mounting hardware to support normal laboratory loads.

7.2.2 Test Procedure

A shelf shall be mounted in the manner in which it is designed. Measure the distance from the underside of the shelf to a reference point perpendicular to the center of the shelf. Use sand bags weighing 10 pounds (4.545 Kg) each. Unless otherwise specified, load the shelf uniformly to 10 pounds (4.545 Kg) per square foot shelf area to a maximum of 75 pounds (30.01 Kg). Measure the deflection on the shelf by measuring the distance to the reference point and calculating the difference between the two measurements. Record data and remove load from the shelf.

7.2.3 Acceptance Level

Longer shelves will support less loads than shorter shelves. The allowable maximum deflection of a shelf is 1/180 of the span and not in excess of .25" (6.35mm). The following formula may be used to calculate the approximate deflection expected from a uniformly distributed load:

D (max.) = 5W L>3 /384 E I

Where:

D = Deflection in inches (Maximum 1/180 span, not to exceed .25" (6.35mm).

W= (Design Load) x (Shelf Depth in Inches) x (Shelf Span in Inches)

(Design Load = 10 pounds / square foot divided by 144)

L = Span between supports in inches

E = Modulus of Elasticity per ASTM D790 **(Polypropylene = 185,000)**

I = Cross section moment of inertia ***(I = b x h>3/12)(Shelf Depth in Inches x Shelf Thickness in Inches cubed)/12.***

POLYPROPYLENE EXAMPLE:

Assuming Shelf is ½" thick x.20" deep x 48" wide but with support in middle of shelf (L =24")

Design Load = 10 pounds/144 = .07

L = 24"

I = (20") x (.5">3)/12 = .21

Solve for W = (.07) x (20") x (24") = 33.6

D (max.) = 5 (33.6) (24>3)/384 (185,000) (.21) = 2,322,432/14,918,400 = .15" Deflection

NOTE: Polypropylene shelves typically have welded lips, stiffeners, and/or cross members, depending on manufacturer. Any such thickness enhancers act to increase Moment of Inertia (I) and thereby decrease D (max.) deflection or allow for higher shelf loads. Above calculations are without any added stiffeners.

8.0 Cabinet Surface Finish Tests

8.1 Chemical Spot Test

Users should consider the chemical and staining agents that might be used near the laboratory casework. Common guidelines can be found by referring to: The casework manufacturer printed data for chemical and stain resistance. Because chemical and stain resistance is affected by concentration, time, temperature, humidity, housekeeping and other factors, it is recommended that users test samples in their actual environment with the substances they use.

8.1.1 Purpose of Test

The purpose of the chemical spot test is to evaluate the resistance a finish has to chemical spills.

Note: Many organic solvents are suspected carcinogens, toxic and/or flammable. Great care should be exercised to protect personnel and the environment from exposure to harmful levels of these materials.

8.1.2 Test Procedure

Sample substrate will be red oak, rift-cut veneer without stain underneath the coating. Panels to be finished according to finishing supplier's guidelines and in accordance to casework manufacturer's standard procedures.

Obtain one sample panel measuring 14" x 24" (355.6mm x 609.6mm). The received sample to be tested for chemical resistance as described herein. Place panel on a flat surface, clean with soap and water and blot dry. Condition the panel for 48-hours at 73° +/- 3°F (23° +/- 2°C) and 50 +/- 5% relative humidity or the currently accepted guideline set by ASTM. Test the panel for chemicalresistance using forty-nine different chemical reagents by one of the following methods.

© SEFA - 5th Edition Desk Reference - Version 3.0

Method A - Test volatile chemicals by placing a cotton ball saturated with reagent in the mouth of a 1-oz. (29.574cc) bottle and inverting the bottle on the surface of the panel.

Method B - Test non-volatile chemicals by placing five drops of the reagent on the surface of the panel and covering with a 24mm watch glass, convex side down.

For both of the above methods, leave the reagents on the panel for a period of one hour. Wash off the panel with water, clean with detergent and naptha, and rinse with deionized water. Dry with a towel and evaluate after 24-hours at 73º +/- 3ºF (23º +/- 2ºC) and 50 +/- 5% relative humidity, or the currently accepted guideline set by ASTM using the following rating system.

Level 0 - No detectable change.
Level 1 - Slight change in color or gloss.
Level 2 - Slight surface etching or severe staining.
Level 3 - Pitting, cratering, swelling, or erosion of coating. Obvious and significant deterioration.

Note: Percentages are by volume.

8.1.3 Acceptance Level

Range of results is provided to establish the acceptable range for a Laboratory Grade Finish. Results will vary from manufacturer to manufacturer due to differences in finish formulations. Laboratory grade finishes shall result in no Level 3 conditions. Individual test results, for the specified 49 reagents, will be verified with the established third party, independent SEFA 8 test submittal form. Suitability for a given application is dependent upon the chemicals used in a given laboratory.

Test No.	Chemical Reagent	Test Method
1.	Acetate, Amyl	A
2.	Acetate, Ethyl	A
3.	Acetic Acid, 98%	B
4.	Acetone	A
5.	Acid Dichromate, 5%	B
6.	Alcohol, Butyl	A
7.	Alcohol, Ethyl	A
8.	Alcohol, Methyl	A
9.	Ammonium Hydroxide, 28%	B
10.	Benzene*	A
11.	Carbon Tetrachloride	A
12.	Chloroform	A
13.	Chromic Acid, 60%	B
14.	Cresol	A
15.	Dichloracetic Acid	A
16.	Dimethylformamide	A
17.	Dioxane	A
18.	Ethyl Ether	A
19.	Formaldehyde, 37%	A
20.	Formic Acid, 90%	B
21.	Furfural	A
22.	Gasoline	A
23.	Hydrochloric Acid, 37%	B
24.	Hydrofluoric Acid, 48%	B
25.	Hydrogen Peroxide, 30%	B
26.	Iodine, Tincture of	B
27.	Methyl Ethyl Ketone	A
28.	Methylene Chloride	A
29.	Monochlorobenzene*	A
30.	Naphthalene	A
31.	Nitric Acid, 20%	B
32.	Nitric Acid, 30%	B
33.	Nitric Acid, 70%	B
34.	Phenol, 90%	A
35.	Phosphoric Acid, 85%	B
36.	Silver Nitrate, Saturated	B
37.	Sodium Hydroxide, 10%	B
38.	Sodium Hydroxide, 20%	B
39.	Sodium Hydroxide, 40%	B
40.	Sodium Hydroxide Flake	B
41.	Sodium Sulfide Saturated	B
42.	Sulfuric Acid, 33%	B
43.	Sulfuric Acid, 77%	B
44.	Sulfuric Acid 96%	B
45.	Sulfuric Acid, 77% & Nitric Acid, 70% equal parts	B
46.	Toluene	A
47.	Trichloroethylene	A
48.	Xylene	A
49.	Zinc Chloride, Saturated	B

***If the use of this chemical is permitted by law in the country where the testing is being performed.**

8.1.4 Additional Chemical Resistance Data for Polypropylene (PP) and Fire-Retardant Polypropylene (FRPP - UL 94 V/O Grade)

The following data is made available from several manufacturers of polypropylene extruded sheet, which is used in the manufacture of polypropylene casework and fume hoods. Polypropylene casework and hood manufacturers do not alter the chemical resistance of original raw extruded sheet when manufacturing their casework and hoods, and other polypropylene furniture. No coatings, laminates, or any other changes to raw stock are made before and during the manufacturing of polypropylene furniture. Therefore chemical resistance data as provided by the raw sheet manufacturers should be no different than resistance data of finished furniture.

The test protocols range in detail between raw sheet manufacturers but none are less stringent than above chemical contact test described in Section 8.1.2. Many immerse polypropylene samples in chemicals for several hours and even days.

The following is a more extensive list of chemicals which are compatible with polypropylene. These are provided to offer specifiers greater chemical compatibility information for most commonly used chemicals.

The following data describes the highest temperature (F) of the particular chemical for which polypropylene is recommended (R), without significant adverse effect (No Level "3"s). Because elevated temperatures of many chemicals increase their corrosive effect on materials (some dramatically), it is important to include this temperature data for more meaningful information purposes.

Chemical Resistance Chart Disclaimer

The data in the following tables were obtained from numerous polypropylene resin manufacturers in the industry. The information is based primarily on the immersion or spot testing of unstressed sample strips or wafers in the chemicals listed at ambient and elevated temperatures and, to a lesser degree, on filed experience with various products. The end user should be aware of the fact that the actual service conditions will affect the chemical resistance. The chemical resistance table should be used for a reference guide. It is the ultimate responsibility of the end user to determine the compatibility or suitability of the chemicals and materials being used in their particular application.

R = Recommended up to temperature indicated

NR = Not Recommended

© SEFA - 5th Edition Desk Reference - Version 3.0

Chemical Concentrations	PP	FRPP
Acetic Acid 5%	R-200F	R-200F
Acetic Acid 10%	R-200F	R-200F
Acetic Acid 50%	R-185F	R-185F
Acetic Acid 80%	R-120F	R-120F
Alcohol	R-120F	
Alcohols-		
Amyl	R-170F	
Butyl	R-180F	
Ethyl	R-100F	R-100F
Isobutyl	R-140F	
Isopropyl	R-150F	
Methyl	R-150F	R-150F
Propyl	R-73F	R-73F
Alum	R-180F	
Aluminum Hydroxide	R-180F	
Aluminum Phosphate	NR	
Aluminum Sulfate	R-180F	
Ammonia, Anhydrous	NR	
Ammonia, Liquid	R-108F	
Ammonia, Nitrate	R-180F	
Ammonia, Chloride	R-170F	
Ammonium, Fluoride 10%	R-180F	R-180F
Ammonium, Fluoride 20%	R-180F	R-180F
Ammonium, Fluoride 25%	R-73F	R-73F
Ammonium, Hydroxide	R-180F	
Ammonium, Nitrate	R-180F	
Ammonium, Persulfate	R-180F	
Ammonium, Salts	R-180F	
Ammonium, Sulfate	R-180F	
Anti-Freeze	R-180F	
Antimony Chloride	R-140F	
Aqua Regia	NR	
Bleach	R-73F	
Boric Acid	R-180F	
Brine	R-140F	
Bromic Acid	R-140F	
Bromine Gas	NR	
Bromine Liquid	NR	
Bromine Water	NR	
Butyl Carbitol		
Butyl Cellosolve		
Calcium Carbonate	R-180F	
Calcium Chlorate	R-180F	
Calcium Chloride	R-180F	
Calcium Dioxide		

Chemical Concentrations	PP	FRPP
Carbonic Acid	R-140F	
Caustic Lime	R-180F	
Caustic Potash	R-180F	
Caustic Soda	R-180F	
Cellosolve		
Chlorine Gas, Wet	NR	
Chlorine, Liquid	NR	
Chlorine Water	NR	
Clorox Bleach 5.5%	NR	
Chromic Acid 5%	R-140F	R-140F
Chromic Acid 10%	R-140F	R-140F
Chromic Acid 20%	NR	R-72F may cause cracking under stress
Chromic Acid 30%	NR	R-72F may cause cracking under stress
Chromic Acid 60%		
Copper Cyanide	R-180F	
Copper Sulfate	R-180F	
Copper Sulfate 5%		
Corn Oil	R-100F	
Corn Syrup	R-150F	
Cottonseed Oil	R-150F	R-150F
Cupric Nitrate	R-180F	
Cupric Salts	R-180F	
Cupric Sulfate	R-180F	
Cycloexanone	R-68F	
Detergents	R-140F	R-140F
Dichlor Acid 60%		
Dichromate Acid 5%		
Dimethylforanide		
Dioxane		
Disodium Phosphate	R-180F	
Ethanol	R-100F	
Ethyl Acetate	R-68F	NR
Ethyl Ether	R-68F	
Ferric Chloride Anhy-drous	R-73F	
Ferric Nitrate	R-180F	
Ferric Sulfate	R-180F	
Fluorboric Acid	R-140F	
Fluosilicic Acid 25%	R-140F	
Formaldehyde	R-104F	R-104F
Formaldehyde 35%	R-140F	R-140F
Formaldehyde 50%	R-73F	R-73F
Formaldehyde 50%	R-73F	R-73F
Freon 11	R-73F	
Furfural		

Chemical Concentrations	PP	FRPP
Fuel Oil	R-73F	
Gasoline		
Glycerin	R-180F	
Hydrochloric Acid		
Hydrochloric Acid 10%	R-160F	R-160F
Hydrochloric Acid 20%	R-160F	R-160F
Hydrochloric Acid 25%	R-160F	R-160F
Hydrochloric Acid 37%	R-160F	
Hydrocyanic Acid	R-140F	
Hydrocyanic Acid 10%	R-140F	
Hydrofluoric Acid 10%	R-140F	R-140F
Hydrofluoric Acid 20%	R-140F	R-140F
Hydrofluoric Acid 30%	R-140F	R-140F very slight discol-oration
Hydrofluoric Acid 40%	R-140F	
Hydrofluoric Acid 50%	R-73F	
Hydrofluoric Acid 65%	R-73F	
Hydrofluoric Acid 75%	R-73F	
Hydrofluosilicic Acid	R-140F	
Hydrofluosilicic Acid 20%	R-140F	
Hydrogen Peroxide 5%	R-180F	R-180F
Hydrogen Peroxide 10%	R-140F	
Hydrogen Peroxide 30%	R-140F	R-104F
Hydrogen Peroxide 50%	R-68F	
Hydrogen Peroxide 90%	NR	
Iodine		
Isobutyl Alcohol	R-140F	
Isopropyl Alcohol	R-150F	
Ketones	NR	R-72F
Lemon Oil	NR	
Lime (Calcium Oxide)	R-73F	
Linseed Oil	R-180F	
Lye Solution/Sod Hy-droxide	R-180F	
Machine Oil	R-73F	
Magnesium Chloride	R-180F	
Magnesium Hydroxide	R-180F	
Magnesium Sulfate	R-180F	
Methane	R-73F	
Methanol	R-140F	
Methyl "Cellosolve"	R-73F	
Methyl Alcohol	R-150F	
Methyl Ethyl Ketone	R-68F	
Methylene Chloride	NR	
Mineral Oil	R-100F	R-100F

Chemical Concentrations	PP	FRPP
Mono Chlorobenzene		
Motor Oil	R-73F	
Naphthalene		
Nickel Chloride	R-180F	
Nickel Cyanide		
Nickel Nitrate	R-180F	
Nitric Acid 10%	R-140F	R-72F very slight discolor-ation
Nitric Acid 30%	R-73F	R-73F slight discoloration
Nitric Acid 50%	R-73F	R-73F slight discoloration
Nitric Acid 70%	NR	NR
Nitric Acid Concentrated	NR	NR
Oils, Cotton Seed	R-150F	
Oils, Mineral	R-100F	
Oils, Vegetable	R-150F	R-150F
Ozone	R-73F	
Peracetic Acid 40%	NR	
Phenol 90%		
Phosphoric Acid 10%	R-180F	R-180F
Phosphoric Acid 50%	R-180F	R-180F
Phosphoric Acid 85%	R-180F	R-180F
Phosphoric Acid 100%	R-73F	R-73F
Photographic Developer	R-104F	R-104F
Photographic Solutions	R-150F	R-150F
Pickle Brine	R-140F	
Pickling Solutions	R-180F	
Plating Solutions		
Antimony	R-180F	
Arsenic	R-150F	
Brass	R-180F	
Bronze	R-180F	
Cadmium	R-73F	
Chrome	R-73F	
Copper	R-180F	
Gold	R-73F	
Indium	R-120F	
Iron	R-140F	
Lead	R-140F	
Nickel	R-140F	
Rhodium	R-140F	
Silver	R-180F	
Tin	R-180F	
Zink	R-180F	
Potash	R-180F	

© SEFA - 5th Edition Desk Reference - Version 3.0

Chemical Concentrations	PP	FRPP
Potassium Carbonate	R-180F	
Potassium Chloride	R-180F	
Potassium Hydroxide		
Potassium Hydroxide 25%	R-180F	
Potassium Hydroxide 50%	R-73F	
Potassium Permanganate	R-120F	
Potassium Sulfate	R-77F	
Propyl Alcohol	R-140F	
Propylene Glycol	R-100F	
Salt Brine	R-140F	
Silver Nitrate	R-180F	
Silver Sulfate	R-180F	
Soda Ash	R-180F	
Sodium		
Sodium Acetate	R-180F	
Sodium Bicarbonate	R-180F	
Sodium Bisulfate	R-180F	
Sodium Chlorate	R-140F	
Sodium Chloride	R-176F	
Sodium Hydroxide 15%	R-180F	
Sodium Hydroxide 30%	R-180F	
Sodium Hydroxide 50%	R-180F	
Sodium Hydroxide 70%	R-140F	R-140F
Sodium Hydroxide Conc.	R-73F	
Sodium Hypochlorite 20%	R-73F	R-73F
Sodium Peroxide	R-180F	
Sulfuric Acid 10%	R-180F	R-180F
Sulfuric Acid 30%	R-150F	
Sulfuric Acid 50%	R-150F	
Sulfuric Acid 70%	R-120F	
Sulfuric Acid 80%	R-100F	
Sulfuric Acid 90%	R-73F	
Sulfuric Acid 100%	NR	NR
Tetrahydrofuran	NR	
Toluene Toluol	NR	NR
Trichloracetic Acid	R-120F	
Tricloroethylene	R-73F	
Vegetable Oil	R-180F	
Vinegar	R-180F	
Water, Deionized	R-180F	
Water, Distilled	R-180F	
Water, Potable	R-180F	
Xylene	NR	
Zinc Chloride	R-180F	
Zinc Nitrate	R-180F	
Zinc Salts	R-180F	
Zinc Sulphate	R-180F	

8.2 Hot Water Test

8.2.1 Purpose of Test

The purpose of this test is to insure the coating is resistant to hot water.

8.2.2 Test Procedure

Hot water (190ºF to 205ºF [88ºC to 96ºC]) shall be allowed to trickle (with a steady stream and at a rate of not less than 6 ounces [177.44cc] per minute) on the finished surface, which shall be set at an angle of 45º, for a period of five minutes.

8.2.3 Acceptance Level

After cooling and wiping dry, the finish shall show no visible effect from the hot water.

8.3 Impact Test

Not Applicable to Polypropylene

8.4 Paint Adhesion Test

Not Applicable to Polypropylene

8.5 Paint Hardness Test

Not Applicable to Polypropylene

8.6 Dart Impact Test

Not Applicable to Polypropylene

8.7 Edge Delaminating Test

Not Applicable to Polypropylene

8.8 Edge Impact Test

Not Applicable to Polypropylene

8.9 Wear Resistance (Abrasion) Test

Not Applicable to Polypropylene

9.0 Wall, Counter Mounted, and Tall Cabinets

9.1 Description of Test Cabinet

Evaluation shall be conducted on a wall mountable wall cabinet should be double door design cabinet with nominal dimensions as follows: 48" (1,219.2mm) wide, 30" (762mm) high, and 12" (304.8mm) deep. The wall cabinet

shall be manufactured to manufacturers' standard construction and practices. Door loading procedures are outlined under Section 5.0 (Doors). The wall cabinet will be provided with the manufacturer's standard number of shelves. Shelves shall be evaluated per Section 7.0 (Shelves). The unit and shelves shall be mounted in a manner recommended by the manufacturer. A visual examination shall be conducted to verify that the configuration and installation comply with these conditions (see Figure 11). Discontinue evaluation if unit is not in compliance or if malfunction is noted.

9.2 Load Test

9.2.1 Purpose of Test

The wall mounted load test will demonstrate the strength of the back of the wall cabinet as well as the joinery of the cabinet and function of doors when the unit is subjected to loads normally expected for laboratory furniture.

9.2.2 Test Procedure

Using sand or shot bags weighing 10 pounds (4.536 Kg) each, load cabinet bottom, each shelf, and top uniformly with 10 pounds (4.536 Kg) per square foot to a maximum of 40 pounds (18.144 Kg) each. Maximum load to any cabinet shall not exceed 480 pounds (217.72 Kg) (a maximum of 200 pounds [90.719 Kg] loaded to each bottom, a minimum of one shelf loaded per Section 7.0, and the top) regardless of the number of shelves.

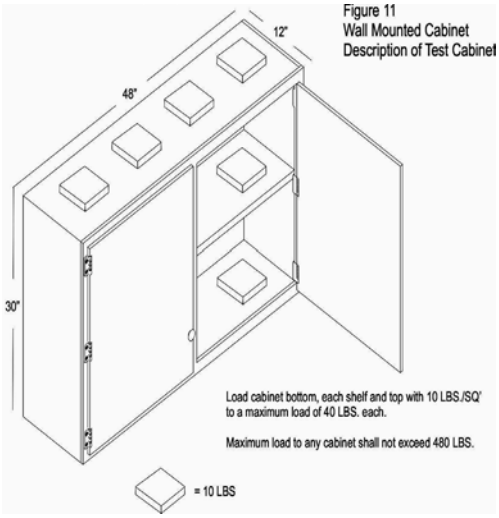

Figure 11
Wall Mounted Cabinet
Description of Test Cabinet

9.2.3 Acceptance Level

With weights in place, operate doors throughfull travel to verify normal operation of doors. Remove weights and operate doors to verify normal operation. Verify that there is no significant permanent deflection of cabinet top, cabinet back, cabinet bottom, or shelves. After weights are removed, the cabinet shall show no permanent damage to the cabinet, cabinet bottom, or shelves.

10.0 Tables

10.1 Description of Test Unit

The table for evaluation shall be a standing height, four legged, free standing table. The table shall be nominally 60" (1,524mm) long, 24" (609.6mm) deep, and 36" (914.4mm) high (see: Figure 12). Leg and apron size and construction shall be to manufacturer's specification. A top of 1" (25.4mm) thick 37 - 50 pcf medium density fiberboard shall be positioned on the table in a manner recommended by the manufacturer. The top dimensions will be such that it will overhang the cabinet perimeter by 1" (25.4mm). Its weight shall be included in the test as live load.

Polypropylene tables can be represented by a very large range of styles and designs. Products inclusive in this section of testing are: Free Standing Tables, Desks, Aprons mounted between two fixed areas such as a wall or Casework, Mobile Tables (Free Standing Tables on wheels or casters), Mobile Under Counter Units, Mobile Workstations, Adjustable Tables, Modular Tables, C-Frame

Tables, L-Frame Tables, J-Frame Tables, and Tables for systems furniture. These table systems can all be classified as one of three types of tables; Fixed, Free Standing, and Mobile.

10.2 Table Static Load For Free Standing Polypropylene Table

10.2.1 Test Purpose of Test

This test will challenge the table components to loads that are normal for use in a laboratory.

© SEFA - 5th Edition Desk Reference - Version 3.0

10.2.2 Test Procedure

Load the table top by using solid steel bars (per Section 3.1), each weighing 50 pounds (22.68 Kg), stacked evenly and spaced per Figure 12. These evenly distributed loads should be no less than 300 pounds (136.08 Kg). Include the weight of the working surface as live load.

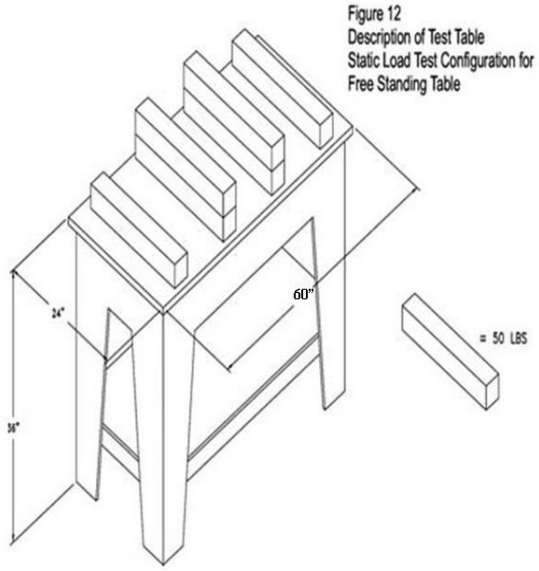

Figure 12
Description of Test Table
Static Load Test Configuration for
Free Standing Table

10.2.3 Acceptance Level

No structural breakage shall result from application of the load. With the full load, the apron rails shall not deflect more than 1/360 of the span of the table and not to exceed 1/8" (3.175mm). In the case of a table with a drawer, the deflection of the rail shall not interfere with the function of the drawer. After the load is removed, inspect the table for structural damage.

10.3 Table Racking

Not Applicable to Polypropylene

Endnotes:

1 This format has been adapted from the BIFMA American National Standard format, X5.5 - 1989.

2 Ibid. p 8.

3 Ibid. pp 10-26.

4 The Concise American Heritage Dictionary, (Boston: Houghton Mifflin Company, 1969), p. 38.

5 Architectural Woodwork Institute, Architectural Woodwork Quality Standards Illustrated, 7th Edition Version 1.0, 1997, p A-563.

6 A. Merriam-Webster, Webster's Ninth New Collegiate Dictionary, (Massachusetts: Merriam-Webster Inc.1988), p 381.

7 BIFMA, American National Standard for Office Furnishings, (ANSI/BIFMA X5.5-1983), p 8-9.

8 Webster's Ninth New Collegiate Dictionary, 1988, p 980.

LABORATORY FURNITURE
CERTIFICATE OF PERFORMANCE

_____ certifies that its laboratory furniture identified as
(Company Name)

_____ , has been tested in conformance with the full requirements
(Test Unit)

of the **SEFA 8-P-2020 Recommended Practices**. Testing was performed by a SEFA-approved Independent Third Party Test Lab with results noted below.

Full documentation of the test results is available upon request in a bound report that includes a detailed description of the test unit and procedures, witnesses results and appropriate drawings or photographs of the test unit and procedures.

TEST	TEST RESULTS PASS/FAIL	TEST	TEST RESULTS PASS / FAIL	TEST	TEST RESULTS PASS / FAIL
4.2		5.3		8.1	*See Attached Form*
4.3		6.1		8.2	
4.4		6.2		9.2	
4.5		6.3		10.2	
4.6		6.4			
5.1		6.5			
5.2		7.2			

COMPANY INFORMATION	TEST SUPERVISOR INFORMATION
Name:	Name:
Address:	Title:
	Signature:
Telephone:	**COMPANY OFFICER INFORMATION**
Fax:	Name:
	Title:
Date:	Signature:

© SEFA - 5th Edition Desk Reference - Version 3.0

CHEMICAL RESISTANCE TESTING – 8-P-2020

Date of Test: _____ Sample Description: _____

Type of Material Coated: _____ Coating Type: _____

Rating Scale: Level 0 – No Detectable Change
Level 1 – Slight Change in Color or Gloss
Level 2 – Slight Surface Etching or Severe Staining
Level 3 – Pitting, Cratering, Swelling, Erosion of Coating. Obvious and Significant Deterioration.

Test No.	Chemical Reagent	Rating	Comments
1.	Acetate, Amyl		
2.	Acetate, Ethyl		
3.	Acetic Acid, 98%		
4.	Acetone		
5.	Acid Dichromate, 5%		
6.	Alcohol, Butyl		
7.	Alcohol, Ethyl		
8.	Alcohol, Methyl		
9.	Ammonium Hydroxide, 28%		
10.	Benzene*		
11.	Carbon Tetrachloride		
12.	Chloroform		
13.	Chromic Acid, 60%		
14.	Cresol		
15.	Dichloroacetic Acid		
16.	Dimethylformamide		
17.	Dioxane		
18.	Ethyl Ether		
19.	Formaldehyde, 37%		
20.	Formic Acid, 90%		
21.	Furfural		
22.	Gasoline		
23.	Hydrochloric Acid, 37%		
24.	Hydrofluoric Acid, 48%		
25.	Hydrogen Peroxide, 30%		
26.	Iodine, Tincture of		
27.	Methyl Ethyl Ketone		
28.	Methylene Chloride		
29.	Mono Chlorobenzene*		
30.	Naphthalene		
31.	Nitric Acid, 20%		
32.	Nitric Acid, 30%		
33.	Nitric Acid, 70%		
34.	Phenol, 90%		
35.	Phosphoric Acid, 85%		
36.	Silver Nitrate Saturated		
37.	Sodium Hydroxide 10%		
38.	Sodium Hydroxide 20%		
39.	Sodium Hydroxide 40%		
40.	Sodium Hydroxide Flake		
41.	Sodium Sulfide Saturated		
42.	Sulfuric Acid, 33%		
43.	Sulfuric Acid, 77%		
44.	Sulfuric Acid, 96%		
45.	Sulfuric Acid 77%& Nitric Acid 70% equal parts		
46.	Toluene		
47.	Trichloroethylene		
48.	Xylene		
49.	Zinc Chloride, Saturated		

TEST PERFORMED BY: _____ DATE: _____

Scientific Equipment & Furniture Association
Recommended Practices

SEFA 8W-2020
Laboratory Grade Wood Casework

SEFA World Headquarters
65 Hilton Avenue
Garden City, NY 11530

Tel: 516-294-5424
www.sefalabs.com

SEFA SPELLS SAFE

Table Of Contents

	Page
Committee Members	**349**
Foreword	**350**
Sections	
1.0 Scope	**351**
2.0 Purpose	**351**
3.0 Definitions	**351**
3.1 Description of Testing Apparatus	
4.0 Base Cabinets	**354**
4.1 Description of Test Unit	
4.2 Cabinet Load Test	
4.2.1 Purpose of Test	
4.2.2 Test Procedure	
4.2.3 Acceptance Level	
4.3 Cabinet Concentrated Load Test	
4.3.1 Purpose of Test	
4.3.2 Test Procedure	
4.3.3 Acceptance Level	
4.4 Cabinet Torsion	
4.4.1 Purpose of Test	
4.4.2 Test Procedure	
4.4.3 Acceptance Level	
4.5 Cabinet Submersion Test	
4.5.1 Purpose of Test	
4.5.2 Test Procedure	
4.5.3 Acceptance Level	
4.6 Spill Containment Test	
Not applicable to Wood Casework	
5.0 Doors	**356**
5.1 Door Hinge Test	
5.1.1 Purpose of Test	
5.1.2 Test Procedure	
5.1.3 Acceptance Level	
5.2 Door Impact Test	
Not applicable to Wood Casework	
5.3 Door Cycle Test	
5.3.1 Purpose of Test	
5.3.2 Test Procedure	
5.3.3 Acceptance Level	
6.0 Drawers	**358**
6.1 Drawer Static Test	
6.1.1 Purpose of Test	
6.1.2 Test Procedure	
6.1.3 Acceptance Level	
6.2 Drawer and Door Pull Test	
Not applicable to Wood Casework	
6.3 Drawer Impact Test	
6.3.1 Purpose of Test	
6.3.2 Test Procedure	
6.3.3 Acceptance Level	
6.4 Drawer Internal Impact Test	
6.4.1 Purpose of Test	
6.4.2 Test Procedure	
6.4.3 Acceptance Level	
6.5 Drawer Cycle Test	
6.5.1 Purpose of Test (Mechanical Suspension System)	
6.5.2 Test Procedure (Mechanical Suspension System)	
6.5.3 Acceptance Level (Mechanical Suspension System)	
6.5.4 Test Procedure (Non-Mechanical Suspension System)	
6.5.5 Acceptance Level (Non-MechanicalSuspension System)	
7.0 Shelving	**359**
7.1 Description of Test Unit	

Page

7.2 Shelf Load Test
7.2.1 Purpose of Test
7.2.2 Test Procedure
7.2.3 Acceptance Level

8.0 Cabinet Surface Finish Tests 360

8.1 Chemical Spot Test
8.1.1 Purpose of Test
8.1.2 Test Procedure
8.1.3 Acceptance Level

8.2 Hot Water Test
8.2.1 Purpose of Test
8.2.2 Test Procedure
8.2.3 Acceptance Level

8.3 Impact Test
Not applicable to Wood Casework

8.4 Paint Adhesion Test
Not applicable to Wood Casework

8.5 Paint Hardness Test
Not applicable to Wood Casework

8.6 Dart Impact Test
Not applicable to Wood Casework

8.7 Edge Delaminating Test
Not applicable to Wood Casework

8.8 Edge Impact Test
Not applicable to Wood Casework

8.9 Wear Resistance (Abrasion) Test
Not applicable to Wood Casework

Page

9.0 Wall Cabinets, Counter Mounted and Tall Units 362

9.1 Description of Test Unit

9.2 Load Test
9.2.1 Purpose of Test
9.2.2 Test Procedure
9.2.3 Acceptance Level

10.0 Tables 362

10.1 Description of Test Unit

10.2 Load Test
10.2.1 Purpose of Test
10.2.2 Test Procedure
10.2.3 Acceptance Level

10.3 Table Racking
10.3.1 Purpose of Test
10.3.2 Test Procedure
10.3.3 Acceptance Level

Endnotes 364

Forms 365

© SEFA - 5th Edition Desk Reference - Version 3.0

SEFA 8-W - Committee Members

Committee Co-Chairs

Wayne Cathey - ICI Scientific
Andy Sinnamon - Mott Manufacturing

CIF LAB Solutions, LP

Chang Consulting

DLR Group

Diversified Woodcrafts

H2I Group

HOK

Jacobs

Kewaunee Scientific

Kirksey Architecture

Sheldon Laboratory Systems

SMRT Architects

The S/L/A/M Collaborative

Foreword

SEFA Profile

The Scientific Equipment and Furniture Association (SEFA) is an international trade association comprised of manufacturers of laboratory furniture, casework, fume hoods and members of the design and installation professions. The Association was founded to promote this rapidly expanding industry and improve the quality, safety and timely completion of laboratory facilities in accordance with customer requirements.

SEFA Recommended Practices

SEFA and its committees are active in the development and promotion of Recommended Practices having domestic and international applications. Recommended Practices are developed by the association taking into account the work of other standard writing organizations. Liaison is also maintained with government agencies in the development of their specifications.

SEFA's Recommended Practices are developed in and for the public interest. These practices are designed to promote a better understanding between designers, architects, manufacturers, purchasers, and end-users and to assist the purchaser in selecting and specifying the proper product to meet the user's particular needs. SEFA's Recommended Practices are periodically updated. The Recommended Practices are numbered to include an annual suffix which reflects the year that they were updated. SEFA encourages architects to specify these Recommended Practices as follows: "SEFA 8W-2020".

SEFA Glossary of Terms

SEFA has developed a Glossary of Terms (SEFA 4-2020) for the purpose of promoting a greater understanding between designers, architects, manufacturers, purchasers and end users. The terms defined by SEFA are frequently used in contracts and other documents, which attempt to define the products to be furnished or the work involved. The Association has approved this Glossary in an effort to provide uniformity among those who use these terms. Where a specific Recommended Practice contains definitions which differ from those in the Glossary of Terms, then the definitions in the specific Recommended Practice should be used.

SEFA encourages all interested parties to submit additional terms or to suggest any changes to those terms already defined by the Association. The definitions should be used to help resolve any disputes that may arise or to incorporate the applicable terms in any contract or related documents.

SEFA Disclaimer

SEFA uses its best effort to promulgate Recommended Practices for the benefit of the public in light of available information and accepted industry practices. SEFA does not guarantee, certify or assure the safety or performance of any products, components, or systems tested, installed, or operated in accordance with SEFA Recommended Practices or that any tests conducted under its Recommended Practices will be non-hazardous or free from risk. SEFA encourages the use of third party independent testing where appropriate.

Note : Testing as described in this document must be performed and documented by a SEFA-approved third party testing facility. See Page 36 of the SEFA Desk Reference 5th Edition Version 3.0, or visit us at SEFALABS.COM for the most current list of SEFA-approved test labs.

© SEFA - 5th Edition Desk Reference - Version 3.0

1.0 Scope

The scope of this document is intended to provide manufactures, specifiers, and users tools for evaluating the safety, durability, and structural integrity of laboratory grade wood furniture and complimentary items. This document is inclusive of casework (base units, wall mounted units, counter mounted units, tall units, tables and, shelving systems). Casework, tables, and shelving manufactured for laboratory use should be subjected to the tests and procedures outlined below.

Wood laboratory grade casework shall consist of base cabinets, wall cabinets, counter mounted cabinets, tall cabinets, tables, and shelving. Wood laboratory grade casework shall be constructed of a natural wood core with a wood veneer face and back. A wood cabinet shall consist of a top, bottom, end members and a back.

Aggregate test results may vary by manufacturer. Procedures for testing performance criteria shall be as outlined in this document and results made available upon request. It is assumed that the test model reflects the performance criteria for all products. However there may be certain door/ drawer configurations and/or sizes outside the test unit configuration identified that may not meet certain parts of this test. A test unit has been identified in this document with the sole purpose of obtaining continuity of procedures and results in a scientific format.

Great care should be exercised when heavy loads are applied to the cabinet and appropriate safety precautions taken to insure safety of testing personnel. Properly trained personnel should perform all tests. SEFA assumes no liability for damage or injury as a result of conducting these tests.

The acceptance levels are based on the cumulative field experience and laboratory testing of SEFA members based on actual needs of laboratories. This is a performance- based document. Specifications proscribing specific materials, hardware, finishes, workmanship or construction may or may not meet acceptance levels of this document. If proscriptive components of the specifications conflict with compliance of this document then the Architectural proscribed elements take precedent.

Testing as outlined in this document must be performed and documented by a SEFA-approved independent third party testing facility.

2.0 Purpose

The purpose of this document is to describe the distinguishing performance characteristics of laboratory grade wood furniture and complimentary items. Furniture shall be of a type specifically designed and manufactured for installation and use in a laboratory.

Although aggregate test results may vary from manufacturer to manufacturer, procedures for testing performance criteria shall be as outlined in this document and results made available upon request. It is assumed that the test model reflects the performance criteria for all products regardless of construction, size, or style used. A test unit has been identified in this document with the sole purpose of obtaining continuity for procedures and results in a scientific format.

3.0 Definitions

Acceptance Levels - The acceptance level for each performance criteria is based on the cumulative experience of actual field testing and laboratory results of SEFA members. Acceptance levels describe the expected outcome of each test procedure.

ANSI/BIFMA - ANSI is the American National Standards Institute. Approval of an American National Standard requires verification by ANSI that the requirements for due process, consensus, and other criteria for approval have been met by the standards developer. BIFMA is the Business and Institutional Furniture Manufacturer's Association, an association of manufacturers of desk products and the like.

Apparatus - A machine or group of machines and accessories.

Arithmetic Mean - A number obtained by dividing the sum of a set of quantities by the number of quantities in a set; average.

ASTM - American Society for Testing and Materials.

Base Cabinets - A base cabinet is a storage device consisting of two ends, a back, a face and may or may not include a top or top frame. The face may be open, to access the storage area, or may be outfitted with one or more drawers and/or doors. A base cabinet is always placed on the floor and normally supports a surface. The top sur-face is normally no more than 42" (1,067mm) off the floor surface.

Best Practices - When given a choice of grade, the "best practice" is to select one that offers a well defined degree of control over the quality of workmanship, materials, and installation of a project. SEFA-8 Recommended Practices are written from a view of high quality laboratory furniture.

Cabinet Depth (Deep) - Given a front, bottom, two sides, and a top, the cabinet depth is a measure of the side of the cabinet, in its normal upright position, from the outside back to the outside front excluding doors and door fronts.

Cabinet Height (High) - Given a front, bottom, two sides, and a top, the cabinet height is a measure of the side of the cabinet, in its normal upright position, from the bottom edge of the side to the top, excluding any surface.

Cabinet Width (Wide) - Given a front, bottom, two sides, and a top, the cabinet width is a measure of the front of the cabinet in its normal upright position from one side to the other.

Casework - Base and wall cabinets, display fixtures, and storage shelves. The generic term for both "boxes" and special desks, reception counters, nurses stations and the like. Generally includes the tops and work surfaces.

Chase (Plumbing Area) - Space located behind the back of the base cabinet used to house plumbing or electric lines.

Composition Core - A core material using particleboard, MDF, or agrifiber product.

Combination Unit - A base unit of the type that has both door(s) and drawer(s).

Counter Mounted Cabinet - A counter mounted cabinet is a wall cabinet (usually with a height of approximately 48" [1,219mm] and is typically mounted on the work surface or shelf, as in a reagent shelf).

Cupboard (Door Unit) - That portion of the cabinet with no drawer(s) that may be enclosed by doors.

Drawer - A sliding storage box or receptacle opened by pulling out and closed by pushing in.

Free Standing - Requiring no support or fastening to other structures.

Hardware - Items such as screws, pulls, hinges, latches, locks, and drawer slides used in the construction of casework.

Joinery – The junction of two pieces intended to be permanently connected.

Laboratory Furniture - Furniture designed and manufactured for installation and use in a laboratory.

Latch - A piece of hardware designed to hold a door closed.

Leveling Screws (Levelers) - Threaded components designed to allow adjustment of the cabinet vertically as needed for leveling.

Medium Density Fiberboard (MDF) - Wood particles reduced to fibers in a moderate pressure steam vessel combined with a resin, and bonded together under heat and pressure.

Nominal Dimensions - Not all cabinet manufacturers produce product to the identical dimensions. All dimensions given in this document are accurate to within five percent, which is considered nominal.

© SEFA - 5th Edition Desk Reference - Version 3.0

Particleboard - A panel or core product composed of small particles of wood and wood fiber that are bonded together with synthetic resin adhesives in the presence of heat and pressure.

Permanent Damage - Destruction to material or joinery that would require repair in order to return to its original state.

Permanent Deformation - Deflection that has exceeded the limits of the product, thus changing the original shape of the product

Permanent Deterioration - Erosion or corrosion of material such that the component will never return to its original shape.

Permanent Failure - See "permanent damage."

Plywood - The term plywood is defined as a panel manufactured of three or more layers (plies) of wood or wood products (veneers or overlays and/or core materials), generally laminated into a single sheet (panel). Plywood is separated into two groups according to materials and manufacturing, hardwood plywood and softwood plywood. Except for special constructions, the grain of alternate plies is at right angles.

Pulls - Articles of hardware used to grasp and open/close the door or drawer (see also hardware).

Rack Resistance - The ability of a product to resist stresses that tend to make the product distort and the drawers to become misaligned.

Rail - A horizontal member extending from one side of the cabinet to the other.

Reagent - A substance used because of its chemical or biological activity.

Removable Back - A panel located on the inside back of the base cabinet, which is removable in order to gain access to utilities.

Stainless Steel - Iron based alloys containing more chromium than the 12% necessary to produce passivity (less reactive), but less than 30%.

Submersion - Covered with water.

Tables - An article of furniture having a flat, horizontal surface supported by one or more support members (legs), and a frame (apron).

Tall Cabinet (Full Height Unit) - A tall cabinet is a storage device that consists of two ends, a top and bottom panel, a back and a face. The face may be open to access the storage area or may be outfitted with one or more drawers and/or door(s). A tall cabinet is always placed on the floor and is nominally 84" (2,134mm) high.

Torsion – A force acting at a distance which tends to twist or rotate an object or cabinet.

Uniformly Distributed – A force applied evenly over the area of a surface.

Unobstructed Entry - A cabinet is deemed to be unobstructed if access to the entire storage area is completely without obstacle.

Upright Position - A cabinet oriented in its intended position.

Veneer – A thin layer of wood produced by peeling, clicing, shaving or sawing a solid log, bolt, cant or flitch.

Veneer Core Plywood – A panel or core product composed of an odd number of thin veneer layers that are bonded together with an adhesive. Except for special constructions, the grain of alternate plies is at right angles. All plies shall be combinations of species, thickness, density, and moisture content to produce a balanced panel. All inner plies, except the innermost ply, shall occur in pairs.

Wall Cabinet - A wall cabinet is a storage device consisting of two ends, a back, a top, bottom, and a face. The face may be open to access the storage area or may be outfitted with one or more door(s). The wall cabinet usually does not include a drawer. A wall cabinet is always mounted on a vertical surface such as a wall, a divider, panel or some other vertical structure. A wall cabinet is usually less than 48" (1,219mm) high.

Work Surface - A normally horizontal surface

used to support apparatus at a convenient height above the floor. Work surfaces are normally positioned atop a base cabinet or table structure.

3.1 Description of Testing Apparatus

Solid Steel Bar - A square solid steel bar 2 1/2" (63mm) square, 28 1/4" (717mm) long, weighing 50 pounds (22.679 Kg).

Sand or Shot Bag (10 pounds [4.545 Kg]) - A bag of plastic or cloth with the approximate dimensions 10 9/16" (268mm) x 11" (279mm) as in typical "gallon size re-closable stor-age bags." Filled with enough sand or shot so that contents weigh 10 pounds (4.545 Kg).

Sand Bag (20 pounds [9.071 Kg]) - Two 10 pound (4.545 Kg) sand bags bound together.

Shot Bag (100 lbs. [45.359 Kg]) - A plastic or cloth bag of sufficient size to contain 100 pounds (45.359 Kg) of shot.

Cycling Mechanism - Per ANSI BHMA 156.9.-2003

Steel Rod - A 2" (51mm) diameter by 12" (305mm) long rod, approximately 10 pounds (4.535 Kg) in weight.

Hot Water - To be considered "hot water," the temperature of the water must be between 190° F to 205° F (88° C to 96° C).

One Pound Ball - Solid steel sphere approximately 2" (51mm) in diameter.

Hardwood Corner Block - A block of hardwood 2" (51mm) square by 1" (25.4mm) high.

4.0 Base Cabinets

4.1 Description of Test Cabinet

The base cabinet shall be a combination of cupboard and drawer per Figure 1. The base cabinet shall be 48" +/- 1" (1219.2mm +/- 25.4mm) wide, 36" +/-1" (914.4mm +/- 25.4)mm high, and 22" +/-1" (558 mm+/- 25.4mm) deep. Cabinet dimensions do not include drawer or door front thickness. The drawer shall be above the cupboard, full width and approximately one-fourth the height of the cabinet's face opening. Drawer shall be a minimum of 18" (457.2mm) deep outside dimension. When slides are used for drawers, slides shall be a minimum of 18" (457.2mm) deep. Cupboard shall be double-door design and provide unobstructed entry into the cabinet interior with the doors open. The unit shall contain one adjustable shelf.

The cabinet back shall be the removable type (per manufacturer's standard design as used for access to the plumbing or chase area) with the removable panel removed. Removable panel to be a minimum 36"x18" (914.4mm x 457.2mm). Cabinet may be submitted with either full height end panels or a factory applied sub-base. If a sub-base is provided, it shall be considered a critical element of the cabinet and any failure of the base shall be deemed a failure of the cabinet. Bases built on-site shall not be considered for SEFA testing. The cabinet shall be free standing, squared and sitting 1" (25.4mm) off the floor atop four hardwood corner blocks 2" (50.8mm) square and 1" (25.4mm) high. A top of 1" (25.4mm) thick 37-50 pcf medium density fiberboard shall be positioned on the cabinet without glue or fasteners of any kind. The top dimensions will be such that it will overhang the cabinet perimeter by 1" (25.4mm).

Before conducting the test, a visual examination shall be conducted to verify that the unit

Fig. 1 - Description of Base Cabinet

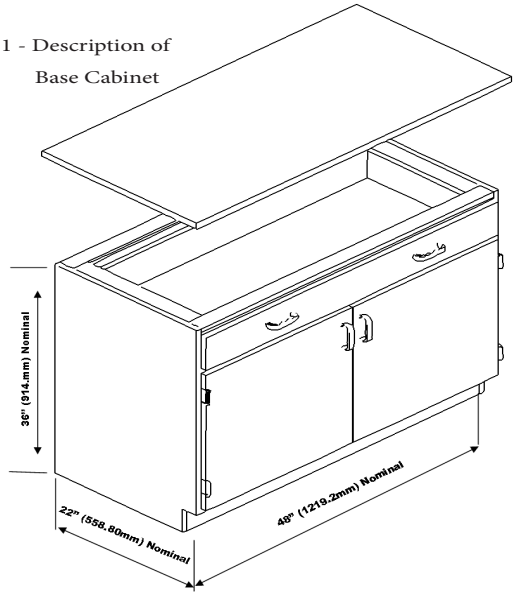

© SEFA - 5th Edition Desk Reference - Version 3.0

configuration and setup conditions are appropriate. Operate doors and drawer. Doors should be free moving and latch properly. Inspect the unit for dimensions and note the fit of doors and drawers to the cabinet body. Open and close the drawer. The drawer should be free moving and function as specified by the manufacturer. Discontinue evaluation if unit is not in compliance or if malfunction is noted.

Although aggregate test results may vary from manufacturer to manufacturer, procedures for testing performance criteria shall be as outlined in this document and results made available upon request. It is assumed that the test model reflects the performance criteria for all products regardless of construction, size, or style used. A test unit has been identified in this document with the sole purpose of obtaining continuity of procedures and results in a scientific format.

4.2 Cabinet Load Test -

4.2.1 Purpose of Test

The cabinet load test will challenge the structural integrity and load bearing capability of the cabinet construction. This test will demonstrate the ability of the cabinet to support heavy applied loads. This is not intended to test the functional

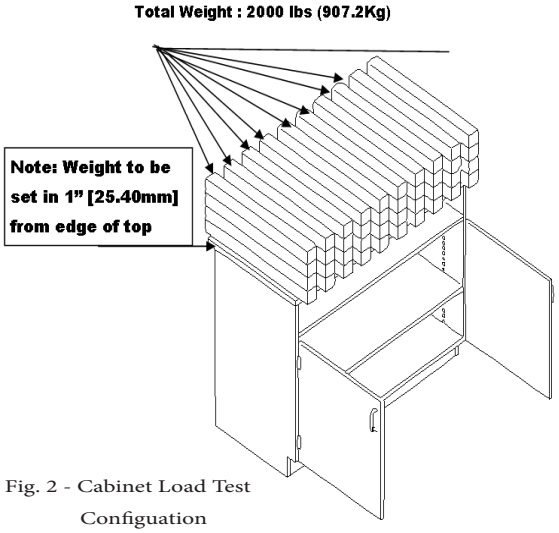

Fig. 2 - Cabinet Load Test Configuation

characteristics of the cabinet under heavy loads.

4.2.2 Test Procedure

Verify that the cabinet is level. Remove drawer and open doors for testing purpose. Load the cabinet top by using 2000 pounds (907.184 Kg) of solid steel bars (per Section 3.1) stacked four high and spaced per Figure 2. After 24 hours, unload the cabinet.

4.2.3 Acceptance Level

The cabinet will have no permanent failure.

4.3 Cabinet Concentrated Load Test

4.3.1 Purpose of Test

The purpose of this test is to challenge the

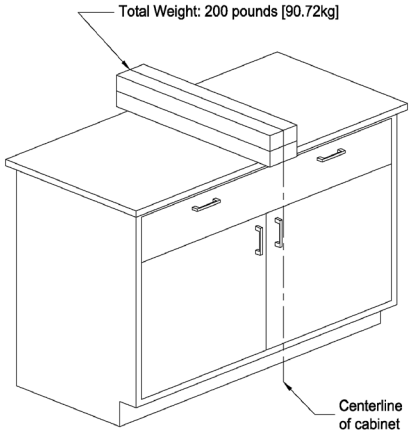

Figure 3. Base Cabinet Concentrated Load Test

functional characteristics of the cabinet when subjected to a concentrated load on the center of the cabinet top.

4.3.2 Test Procedure

Using solid weights or 10 pound (4.535 Kg) sand bags (per Section 3.1), apply a total of 200 pounds (90.718 Kg) to the top of the cabinet along the cabinet centerline (see Figure 3). Operate doors and drawers.

4.3.3 Acceptance Level

Door and drawer operation shall be normal under

condition of test load. There shall be no signs of permanent deformation to front rail, cabinet joinery, doors, or drawers.

4.4 Cabinet Torsion

4.4.1 Purpose of Test

This test will evaluate the structural integrity of the cabinet construction when subjected to a torsional load.

4.4.2 Test Procedure

Measure the diagonal corners and record them as the pre-load baseline reference. The cabinet shall be supported on all four corners with four inch square blocks located not more than 6 inches (152.4mm) in from each corner. Load the rear

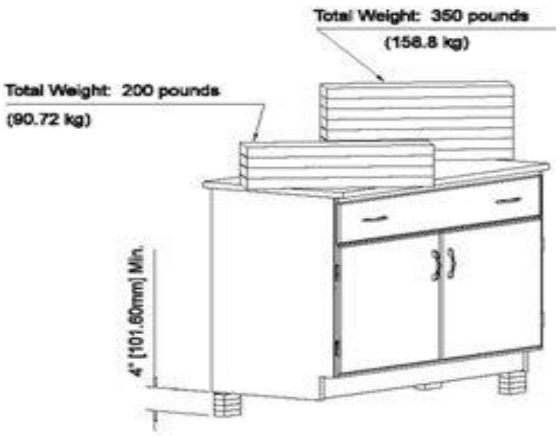

Figure 4. Base Cabinet Torsion Test Procedure.

corner seven inches in from the corner at a 45 degree angle with 350 lbs. (158.757 Kg). Load the front corner seven inches in from the corner at a 45 degree angle with 200 lbs. (90.718 Kg). Carefully pick up the cabinet with a lift truck or similar device just off of the blocks and then remove the front left block under the 200 lbs. (90.718 Kg) and then resettle the cabinet on the remaining 3 blocks for a period of 24 hrs. After the 24 hr. period, repeat the last 3 steps in reverse order. After the unit has the load removed, the unit shall to be re-measured on the same diagonal measurements with the difference recorded.

4.4.3 Acceptance Level

When returned to normal position, the operation of the cabinet shall be normal, and there will be no permanent damage. The difference between the two measurements taken from measuring the diagonal corners shall be no more than 1/8" (3.175mm).

4.5 Cabinet Submersion Test

4.5.1 Purpose of Test

This test will demonstrate the ability of a cabinet to resist wicking of moisture from the floor. Only units that rest on the floor or a unit where the base is within 2" (50.8mm) of the floor should be subjected to this test.

4.5.2 Test Procedure

The material thickness along the perimeter of the cabinet shall be measured on 6" (152.4mm) increments. Record the thickness of the material to be submerged in water. Calculate the arithmetic mean of the data taken. Place the entire test cabinet in its upright position such that the cabinet is submerged in a pan filled with 2" (50.8mm) of water. After 4 hours, remove the unit from the water and immediately measure the thickness of the material at the same points measured initially. Calculate the new arithmetic mean. After the unit has been allowed to dry, inspect for other damage.

4.5.3 Acceptance Level

The cabinet will show no permanent deformation or deterioration. Increase in thickness shall not exceed ten percent of the initial mean measurements.

4.6 Cabinet Spill Containment Test

Not Applicable to Wood Casework.

5.0 Doors

5.1 Door Hinge Test

5.1.1 Purpose of Test

This test will demonstrate the durability of the door, door attachment and its hardware (hinge

© SEFA - 5th Edition Desk Reference - Version 3.0

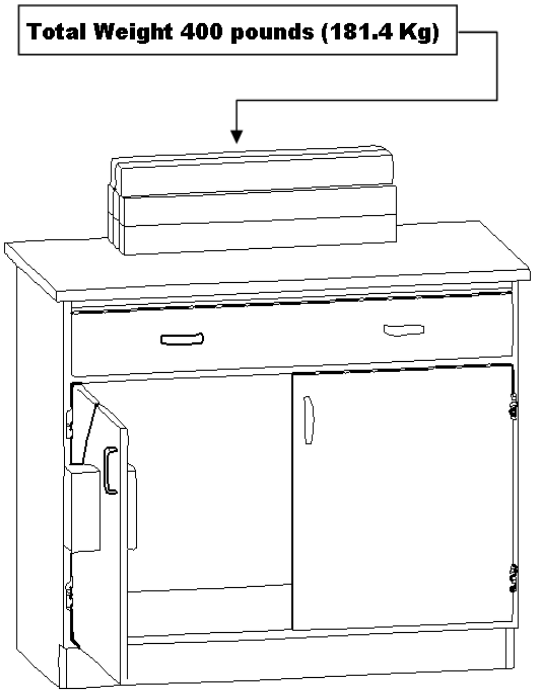

Fig. 5 - Base Cabinet Door Load Configuration

Note: Load top sufficient to prevent tipping of base cabinet

leaf, screws, etc.) to an applied load of 200 pounds (90.72 Kg).

5.1.2 Test Procedure

Remove the shelf for this test. With unit and top set as described in Section 4.1, add sufficient weight to the top in order to prevent overturning. With cabinet door opened 90-degrees, hang a sling made up of two 100 pound (45.359 Kg) weights (shot bags or solid weights) over top of the door at a point 12" (304.8mm) out from the hinge centerline (see Figure 5). Slowly move door through two full cycles of the hinge at 160-degree arc. Remove weight and swing door through its full intended range of motion and close door.

5.1.3 Acceptance Level

The open door shall withstand a load of 200 pounds (90.72 Kg) when applied at a point 12"(304.8mm) from the hinge centerline without permanent damage. Operation of the door, after test shall show no significant permanent damage that will cause binding of the door or hinges or that will adversely affect operation of the catch.

5.2 Door Impact Test

Not Applicable to Wood Casework

5.3 Door Cycle Test

5.3.1 Purpose of Test

This test will demonstrate the durability of the door hinge hardware to withstand 100,000 cycles as a reliable measure for longevity).

5.3.2 Test Procedure

Open the door 5 degrees. A cycling mechanism shall be used to operate the door 90 degrees from the 5 degree open position. The door shall operate for 100,000 cycles continuously, without hinge adjustment, at a speed of 15 cycles per minute.

5.3.3 Acceptance Level

Door shall operate for the full cycle from a closed position to 90 degrees, and back to a closed position, without deterioration that will significantly affect the function of the door. The door shall operate freely without binding.

Fig. 6 Base Cabinet Drawer Static Load Test Configuration

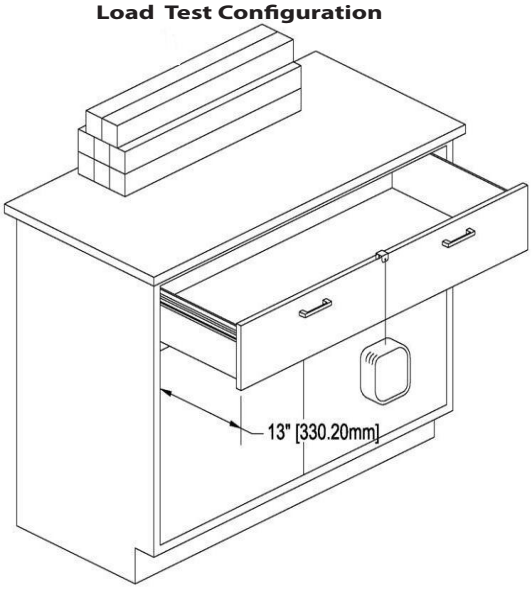

Note: Load top suffcient to prevent tipping of base cabinet. Weight shall be located at the back of the worksurface and centered.

6.0 Drawers

6.1 Drawer Static Test

6.1.1 Purpose of Test

This test will demonstrate the ability to support a point load given to the front of the drawer and will challenge the drawer suspension system and the attachment of the drawer head to the drawer.

6.1.2 Test Procedure

With unit and top set as described in Section 4.1, add sufficient weight to the top in order to prevent overturning. Open the drawer to 13" (330.2mm) of travel and hang 150 pounds (68.03 Kg) from the drawer head at the centerline of the drawer for five minutes. Remove the weight and operate the drawer through the full cycle.

6.1.3 Acceptance Level

There shall be no interference with the normal operation of the drawer and the drawer head should remain tightly fastened to the drawer.

6.2 Drawer and Door Pull Test

Not Applicable to Wood Casework.

6.3 Drawer Impact Test

6.3.1 Purpose of Test

This test will demonstrate the resistance to impact of the drawer bottom.

6.3.2 Test Procedure

Remove drawer; support each corner with 2"x2"x1" (50.8 x 50.8 x 25.4 mm) supports. Drop a 10 pound (4.545 Kg) sand or shot bag from a height of 24" (609.6 mm) into the bottom of the drawer at the center of the width of the drawer. Remove the sand or shot bag.

6.3.3 Acceptance Level

No damage or breakout of the drawer bottom.

Fig. 7 - Base Cabinet Drawer Internal Rolling Impact Test Configuration

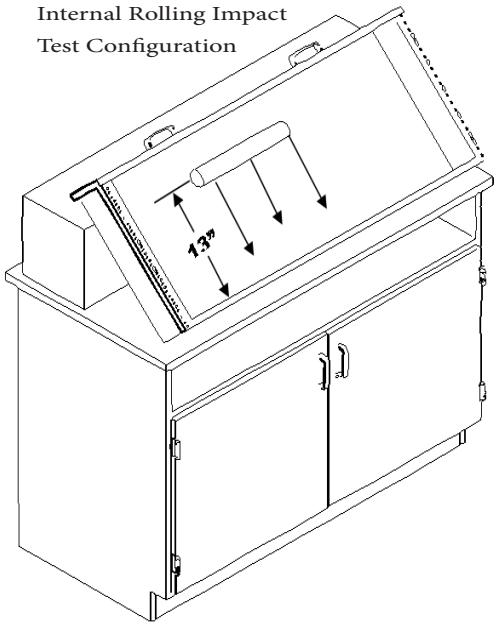

6.4 Drawer Internal Rolling Impact Test

6.4.1 Purpose of Test

This test will evaluate the strength of the drawer head, bottom, and back as a result of opening and closing the drawer with a rolling load.

6.4.2 Test Procedure

Position the drawer on a table at a 45-degree angle per Figure 7. Place a 2" (50.8mm) diameter by 12" (304.8mm) long steel rod (approximately 10 pounds [4.545 Kg]) 13" (330.2mm) from the target impact area such that the rod will roll freely to impact the back of the drawer. Subject the back to three impacts and reverse the drawer to subject the front to three additional impacts.

6.4.3 Acceptance Level

The drawer shall show no permanent damage. All joinery shall be intact and the drawer, when replaced in the unit, shall operate normally. Minor scratches and dents are acceptable.

6.5 Drawer Cycle Test

Mechanical and Non-Mechanical drawer suspension systems are addressed in this Section.

© SEFA - 5th Edition Desk Reference - Version 3.0

When specifiers require SEFA-8 Wood certified cabinets yet fail to stipulate a drawer suspension system then certification will default to cabinets certified with mechanical suspension systems.

6.5.1 Purpose of Test (Mechanical Suspension System)

This test is intended to test the drawer's operation under full load. To be considered Laboratory Grade Wood Casework, the mechanical drawer slides must be rated at a minimum, ANSI/BHMA A156.9 Grade 1.

Fig 8 Drawer Cycling Mechanism Test Configuration

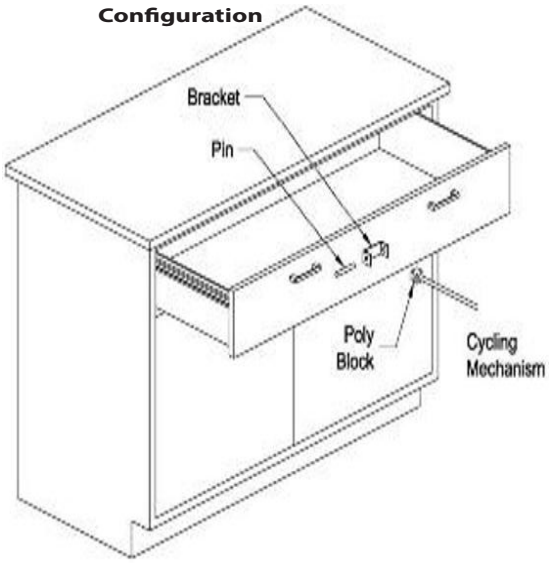

6.5.2 Test Procedure (Mechanical Suspension System)

Mechanical Suspension Systems – A dynamic load of 75 pounds (34.019 Kg) shall be uniformly distributed in the drawer (using ten 7 ½ pound (3.401 Kg) sand or shot bags per Section 3.1). Measure force required to activate the drawer. Operate over the full range of motion without engaging bumpers, stops or self-closing features for 50,000 cycles at a rate not to exceed 8 - 12 cycles per minute.

6.5.3 Acceptance Level (Mechanical Suspension System)

The drawer shall operate freely without evidence of binding. The force required to open and close loaded drawer shall not be greater than 8 pounds to activate.*

6.5.4 Test Procedure - (Non-Mechanical Suspension System)

Non-Mechanical Suspension Systems – A dynamic load of 200 pounds (907.184) shall be uniformly distributed in the drawer (using twenty 10 pound (4.5.4 Kg) sand or shot bags per Section 3.1).

The drawer shall operate freely without evidence of binding. With 200 pounds (90.718 KG) of evenly distributed load in the drawer the force required to open and close drawer shall not be greater than 40 pounds (18.143 Kg) to activate. With 75 pounds (34.019 Kg) of evenly distributed load in the drawer the force required to open and close drawer shall not be greater than 15 pounds (6.803 Kg) to activate.*

*The American's with Disabilities Act (ADA) requires a force no greater than five pounds to activate hardware. The load rating in this document is intended only for testing conditions where loads challenge the durability of the hardware. Under actual conditions, drawer loading should be reduced to levels that result in compliance with ADA as applicable.

7.0 Shelving

7.1 Description of Test Cabinet

Wood shelving shall be tested using the following procedure. The shelves to be tested are as described in sections 4.1 and 9.1 "Description of Test Cabinet". Shelves on both base and wall units shall be tested to this section.

7.2 Shelf Load Test

7.2.1 Purpose of Test

This test will demonstrate the ability of a shelf and its mounting hardware to support loads of 40 pounds (18.143 Kg) per square foot, not to exceed 200 pounds (90.718 Kg).

7.2.2 Test Procedure

A shelf shall be mounted in a manner in which it is designed. Measure the distance from the underside of the shelf to a reference point located on the center line of the shelf, 1/2" from the front edge of the shelf. Use shot or sand bags weighing 10 pounds (4.535 Kg) each. Unless otherwise specified, load the shelf uniformly to 40 pounds (18.14 kg) per square foot of shelf area to a maximum of 200 pounds (90.71 Kg). Measure the deflection of the shelf by measuring the distance to the reference point and calculating the difference between the two measurements. Record data and remove the load.

7.2.3 Acceptance Level

Different materials will perform differently to the loads based on the Modulus of Elasticity of the material and the cross section moment of inertia for the shape of the material. Longer shelves will support less loads than shorter shelves. The allowable maximum deflection of a shelf is 1/180 of the span and not in excess of .25" (6.35mm).

8.0 Cabinet Surface Finish Tests

8.1 Chemical Spot Test

Users should consider the chemical and staining agents that might be used near the laboratory casework. Common guidelines can be found by referring to: The casework manufacturer printed data for chemical and stain resistance, NEMA LD3-2000 for wood product chemical resistance, ASTM D3023 and ASTM C1378 for stain resistance or the most current versions. Because chemical and stain resistance is affected by concentration, time, temperature, humidity, housekeeping and other factors, it is recommended that users test samples in their actual environment with the substances they use.

8.1.1 Purpose of Test

The purpose of the chemical spot test is to evaluate the resistance a finish has to chemical spills.

Note: Many organic solvents are suspected carcinogens, toxic and/or flammable. Great care should be exercised to protect personnel and the environment from exposure to harmful levels of these materials.

8.1.2 Test Procedure

Sample substrate will be red oak, rift-cut veneer without stain underneath the coating. Panels to be finished according to finishing supplier's guidelines and in accordance to casework manufacturer's standard procedures.

Obtain one sample panel measuring 14" x 24" (355.6mm x 609.6mm). The received sample to be tested for chemical resistance as described herein. Place panel on a flat surface, clean with soap and water and blot dry. Condition the panel for 48-hours at 73º +/- 3ºF (23º +/- 2ºC) and 50 +/- 5% relative humidity or the currently accepted guideline set by ASTM. Test the panel for chemical resistance using forty-nine different chemical reagents by one of the following methods.

Method A - Test volatile chemicals by placing a cotton ball saturated with reagent in the mouth of a 1-oz. (29.574cc) bottle and inverting the bottle on the surface of the panel.

Method B - Test non-volatile chemicals by placing five drops of the reagent on the surface of the panel and covering with a 24mm watch glass, convex side down.

For both of the above methods, leave the reagents on the panel for a period of one hour. Wash off the panel with water, clean with detergent and naptha, and rinse with deionized water. Dry with a towel and evaluate after 24-hours at 73º +/- 3ºF (23º +/- 2ºC) and 50 +/- 5% relative humidity, or the currently accepted guideline set by ASTM using the following rating system.

Level 0 - No detectable change.
Level 1 - Slight change in color or gloss.
Level 2 - Slight surface etching or severe staining.
Level 3 - Pitting, cratering, swelling, or erosion of coating. Obvious and significant deterioration.

Note: Percentages are by volume.

© SEFA - 5th Edition Desk Reference - Version 3.0

Test No.	Chemical Reagent	Test Method
1.	Acetate, Amyl	A
2.	Acetate, Ethyl	A
3.	Acetic Acid, 98%	B
4.	Acetone	A
5.	Acid Dichromate, 5%	B
6.	Alcohol, Butyl	A
7.	Alcohol, Ethyl	A
8.	Alcohol, Methyl	A
9.	Ammonium Hydroxide, 28%	B
10.	Benzene*	A
11.	Carbon Tetrachloride	A
12.	Chloroform	A
13.	Chromic Acid, 60%	B
14.	Cresol	A
15.	Dichloracetic Acid	A
16.	Dimethylformamide	A
17.	Dioxane	A
18.	Ethyl Ether	A
19.	Formaldehyde, 37%	A
20.	Formic Acid, 90%	B
21.	Furfural	A
22.	Gasoline	A
23.	Hydrochloric Acid, 37%	B
24.	Hydrofluoric Acid, 48%	B
25.	Hydrogen Peroxide, 30%	B
26.	Iodine, Tincture of	B
27.	Methyl Ethyl Ketone	A
28.	Methylene Chloride	A
29.	Monochlorobenzene*	A
30.	Naphthalene	A
31.	Nitric Acid, 20%	B
32.	Nitric Acid, 30%	B
33.	Nitric Acid, 70%	B
34.	Phenol, 90%	A
35.	Phosphoric Acid, 85%	B
36.	Silver Nitrate, Saturated	B
37.	Sodium Hydroxide, 10%	B
38.	Sodium Hydroxide, 20%	B
39.	Sodium Hydroxide, 40%	B
40.	Sodium Hydroxide Flake	B
41.	Sodium Sulfide Saturated	B
42.	Sulfuric Acid, 33%	B
43.	Sulfuric Acid, 77%	B
44.	Sulfuric Acid 96%	B
45.	Sulfuric Acid, 77% & Nitric Acid, 70% equal parts	B
46.	Toluene	A
47.	Trichloroethylene	A
48.	Xylene	A
49.	Zinc Chloride, Saturated	B

***If the use of this chemical is permitted by law in the country where the testing is being performed.**

8.1.3 Acceptance Level

Results will vary from manufacturer to manufacturer due to differences in finish formulations. Laboratory grade finishes shall result in no more than four (4) Level 3 conditions. Individual test results, for the specified 49 reagents, will be verified with the established third party, independent SEFA 8 test submittal form. Suitability for a given application is dependent upon the chemicals used in a given laboratory.

8.2 Hot Water Test

8.2.1 Purpose of Test

The purpose of this test is to insure the coating is resistant to hot water.

8.2.2 Test Procedure

Hot water (190ºF to 205ºF [88ºC to 96ºC]) shall be allowed to trickle (with a steady stream and at a rate of not less than 6 ounces [177.44cc] per minute) on the finished surface, which shall be set at an angle of 45º, for a period of five minutes.

8.2.3 Acceptance Level

After cooling and wiping dry, the finish shall show no visible effect from the hot water.

8.3 Ball Impact Test

Not Applicable to Wood Casework.

8.4 Paint Adhesion Test

Not Applicable to Wood Casework.

8.5 Paint Hardness Test

Not Applicable to Wood Casework.

8.6 Dart Impact Test

Not Applicable to Wood Casework.

8.7 Edge Delaminating Test

Not Applicable to Wood Casework.

8.8 Edge Impact Test

Not Applicable to Wood Casework.

8.9 Wear Resistance (Abrasion) Test

Not Applicable to Wood Casework.

9.0 Wall, Counter Mounted and Tall Units

9.1 Description of Test Unit

Evaluation shall be conducted on a wall mounted cabinet with nominal dimensions as follows: 48" (1,219.2mm) +/- 1" wide, 30" (762mm) +/- 1" high, and 12" (304.8mm) +/- 1" deep. The wall cabinet shall be manufactured to manufacturers' standard construction and practices. The wall cabinet

Fig. 9 - Wall Mounted Cabinet Description of Test Cabinet

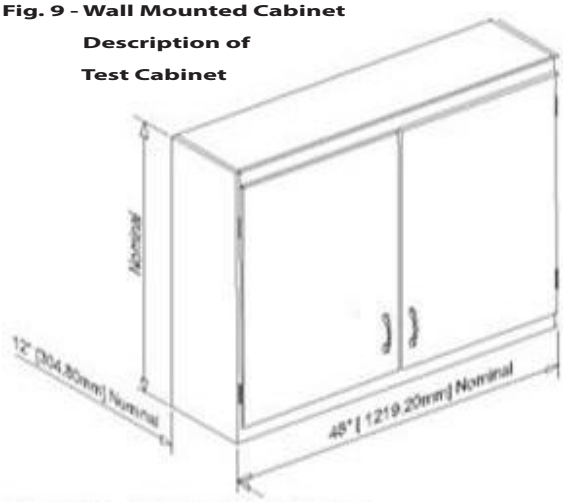

shall be open wall cabinet and have two (2) shelves. Shelves shall be evaluated per Section 7.0 (Shelving). The unit and shelves shall be mounted in a manner recommended by the manufacturer. A visual examination shall be conducted to verify that the configuration and installation comply with these conditions. Discontinue evaluation if unit is not in compliance or if malfunction is noted.

9.2 Wall Cabinet Load Test

9.2.1 Purpose of Test

The wall mounted load test will demonstrate the strength of the back of the wall cabinet as well as the joinery of the cabinet and function of doors when the unit is subjected to loads normally expected for laboratory furniture.

9.2.2 Test Procedure

The unit and shelves shall be mounted to a wall in a manner recommended by the manufacturer. Using sand or shot bags weighing 10 pounds (4.55 Kg) each, load cabinet bottom, each shelf, and top uniformly with 40 pounds (18.18 Kg) per square foot to a maximum of 200 pounds (90.91 Kg) each. Maximum load to any cabinet shall not exceed 600 pounds (272.73 Kg) with the total load being distributed as 160 pounds (72.57 Kg) on the bottom, 160 pounds (72.57 KG) on the top and 140 pounds (53.50 Kg) per shelf (2 shelves required). Test to be performed with doors closed.

9.2.3 Acceptance Level

With weights in place, after a period of 24 hours, operate doors through full travel to verify normal operation of doors. Remove weights and operate doors to verify normal operation. Verify that there is no significant permanent deflection of cabinet top, cabinet back, cabinet bottom, or shelves. After weights are removed, the cabinet shall show no permanent damage to the cabinet, cabinet bottom, or shelves.

10.0 Tables

10.1 Description of Test Unit

The table for evaluation shall be a standing height, four legged, freestanding table frame. The table frame shall be nominally 60" +/- 1" (1,524mm) long , 24" +/- 1" (609.6mm) deep, and 36" +/- 1", (914.4mm) high (see Figure 10). Leg and apron size and construction shall be to manufacturer's specification. A top of 1" (25.4mm) thick 37 - 50 pcf medium density fiberboard shall be supplied and mounted on the table by the testing agency in a manner recommended by the manufacturer. The top dimensions will be such that it will overhang the cabinet perimeter by 1". Its weight shall be included in the test as live load.

© SEFA - 5th Edition Desk Reference - Version 3.0

Fig. 10 - Description of Test Table

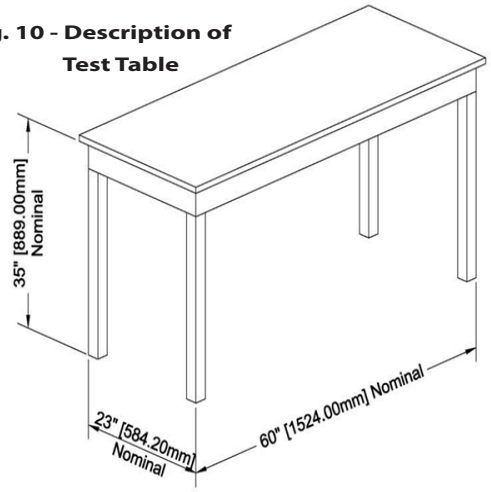

A very large range of styles and designs can represent tables frames. Products inclusive in this section of testing are: Free Standing Tables, Desks, Aprons mounted between two fixed areas such as a wall or Casework, Mobile Tables (Free Standing Tables on wheels or casters), Mobile Under Counter Units, Mobile Workstations, Adjustable Tables, Modular Tables, C-Frame Tables, L-Frame Tables, J-Frame Tables, and Tables for systems furniture. These table systems can all be classified as one of three types of tables; Fixed, Free Standing, and mobile. See Figure 10.

10.2 Table Static Load

10.2.1 Purpose of Test

This test will challenge the table components to loads that are normal for use in a laboratory.

10.2.2 Test Procedure

Load the table top by using solid steel bars (per Section 3.1), each weighing 50 pounds (22.679 Kg), stacked evenly and spaced per Figure 11. Load the table to the manufacturer's recommended live load*. These evenly distributed loads should be no less than 300 pounds (136.077 Kg) for mobile, 600 pounds (272.155 Kg) for free standing and 2000 pounds (907.184 Kg) for fixed. Include the weight of the working surface as live load.

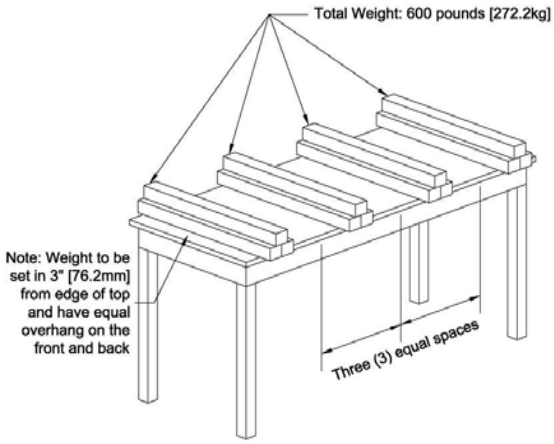

Fig 11 Table Static Load Test Configuration

** Table load will vary considerably. Factors impacting live load capability include the size of the table, material, amount of drawers and book compartments, glide or caster load rating. Contact manufacturer for live load specifications.* See Fig 11.

10.2.3 Acceptance Level

No structural breakage shall result from application of the load. With the full load, the apron rails shall not deflect more than 1/360 of the span of the table and not to exceed 1/8" (3.175mm). In the case of a table with a drawer, the deflection of the rail shall not interfere with the function of the drawer. After the load is removed, inspect the table for structural damage.

10.3 Table Racking

10.3.1 Purpose of Test

This test will demonstrate the structural integrity of the table construction when subjected to a racking load. Most racking failures occur upon dragging an unloaded table across a floor. The ability of a table to resist a racking load will indicate less damage to the structure. The following tests were based on and adapted from ANSI/BIFMA X5.5-1989 American National Standard for Office Furnishings "Desk Products-Tests." Adjustments have been made to better accommodate the specific applications of tables used in laboratories.

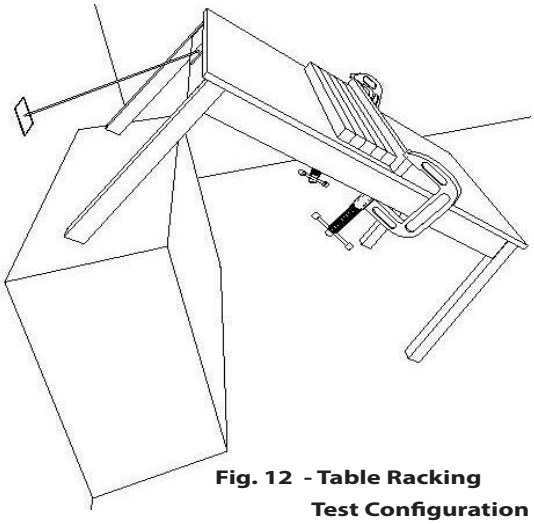

Fig. 12 - Table Racking Test Configuration

10.3.2 Test Procedure

The table shall have a common two-by-four wood rail clamped on the centerline of the top parallel to the ends of the table. The table shall then be positioned at 45º, with one pair of legs on the floor and the other raised and supported (see Figure 12). To prevent the table from tipping over, attach a cable to the end rail of the table and to the wall. The attachment of the cable at the wall must be equal to or less than the height of the attachment at the table. The table shall then have 250 pounds (113.398 Kg) of weight (five 50-pound (22.679 Kg) bars) placed on its top and held in place by the two-by-four wood rail. The unit shall remain in this position for seventy-two hours. The unit shall be lowered without shock to the leveled surface and the general operation of the drawers shall be evaluated.

10.3.3 Acceptance Level

When returned to normal position, the operation of the table shall be normal, and there will be no permanent damage.

Endnotes:

1 This format has been adapted from the BIFMA American National Standard format, X5.5 - 1989.

2 Ibid. p 8.

3 The Concise American Heritage Dictionary, (Boston: Houghton Mifflin Company, 1969), p. 38.

4 A. Merriam-Webster, Webster's Ninth New Collegiate Dictionary, (Massachusetts: Merriam-Webster Inc.1988), p 381.

5 ANSI/HPVA HP-1-2004 American National Standard for Hardwood and Decorative Plywood, p 30.

6 Wood Engineering Handbook, p 23-7.

7 BIFMA, American National Standard for Office Furnishings, (ANSI/BIFMA X5.5-1983), p 8-9.

8 Webster's Ninth New Collegiate Dictionary, 1988, p 980.

9 Metals Handbook Committee, Metals Handbook, 8th Edition, Vol.1 "Properties and Selection of Metals" (Ohio: American Society for Metals, 1969), p 408

© SEFA - 5th Edition Desk Reference - Version 3.0

LABORATORY FURNITURE
CERTIFICATE OF PERFORMANCE

_____ certifies that its laboratory furniture identified as
(Company Name)

_____ , has been tested in conformance with the full requirements
(Test Unit)

of the **SEFA 8-W-2020 Recommended Practices**. Testing was performed by a SEFA-approved Independent Third Party Test Lab with results noted below.

Full documentation of the test results is available upon request in a bound report that includes a detailed description of the test unit and procedures, witnesses results and appropriate drawings or photographs of the test unit and procedures.

TEST	TEST RESULTS PASS/FAIL	TEST	TEST RESULTS PASS / FAIL	TEST	TEST RESULTS PASS / FAIL
4.2		6.3		10.2	
4.3		6.4		10.3	
4.4		6.5	*Mechanical*		
4.5		6.5	*Non-Mechanical*		
5.1		7.1			
5.3		8.1	*See Attached Form*		
6.1		8.2			

COMPANY INFORMATION	TEST SUPERVISOR INFORMATION
Name:	Name:
Address:	Title:
	Signature:
Telephone:	**COMPANY OFFICER INFORMATION**
Fax:	Name:
	Title:
Date:	Signature:

CHEMICAL RESISTANCE TESTING – 8-W-2020

Date of Test: _____ Sample Description: _____

Type of Material Coated: _____ Coating Type: _____

Rating Scale: Level 0 – No Detectable Change
Level 1 – Slight Change in Color or Gloss
Level 2 – Slight Surface Etching or Severe Staining
Level 3 – Pitting, Cratering, Swelling, Erosion of Coating. Obvious and Significant Deterioration.

Test No.	Chemical Reagent	Rating	Comments
1.	Acetate, Amyl		
2.	Acetate, Ethyl		
3.	Acetic Acid, 98%		
4.	Acetone		
5.	Acid Dichromate, 5%		
6.	Alcohol, Butyl		
7.	Alcohol, Ethyl		
8.	Alcohol, Methyl		
9.	Ammonium Hydroxide, 28%		
10.	Benzene*		
11.	Carbon Tetrachloride		
12.	Chloroform		
13.	Chromic Acid, 60%		
14.	Cresol		
15.	Dichloroacetic Acid		
16.	Dimethylformamide		
17.	Dioxane		
18.	Ethyl Ether		
19.	Formaldehyde, 37%		
20.	Formic Acid, 90%		
21.	Furfural		
22.	Gasoline		
23.	Hydrochloric Acid, 37%		
24.	Hydrofluoric Acid, 48%		
25.	Hydrogen Peroxide, 30%		
26.	Iodine, Tincture of		
27.	Methyl Ethyl Ketone		
28.	Methylene Chloride		
29.	Mono Chlorobenzene*		
30.	Naphthalene		
31.	Nitric Acid, 20%		
32.	Nitric Acid, 30%		
33.	Nitric Acid, 70%		
34.	Phenol, 90%		
35.	Phosphoric Acid, 85%		
36.	Silver Nitrate Saturated		
37.	Sodium Hydroxide 10%		
38.	Sodium Hydroxide 20%		
39.	Sodium Hydroxide 40%		
40.	Sodium Hydroxide Flake		
41.	Sodium Sulfide Saturated		
42.	Sulfuric Acid, 33%		
43.	Sulfuric Acid, 77%		
44.	Sulfuric Acid, 96%		
45.	Sulfuric Acid 77%& Nitric Acid 70% equal parts		
46.	Toluene		
47.	Trichloroethylene		
48.	Xylene		
49.	Zinc Chloride, Saturated		

TEST PERFORMED BY: _____ DATE: _____

© SEFA - 5th Edition Desk Reference - Version 3.0

Scientific Equipment & Furniture Association
Recommended Practices

SEFA 9-2020 - Ductless Enclosures

SEFA World Headquarters
65 Hilton Avenue
Garden City, NY 11530

Tel: 516-294-5424
www.sefalabs.com

SEFA SPELLS SAFE

Table of Contents

	Page
Committee Members	**370**
Foreword	**371**
Sections	
1.0 Scope	**372**
2.0 Purpose	**372**
3.0 Ductless Hood Defined	**372**
3.1 Ductless Hood Scope of Application Defined	
4.0 Ductless Hood – Types	**372**
4.1 Ductless Hood Filtration Categories	
4.1.1 DH I	
4.1.2 DH II	
4.1.3 DH III	
4.2 Manufacturer Approved Applications/ Misuse Prevention - As Manufactured	
4.2.1 Manufacturer's Handbook	
4.2.2 Manufacturer Approved Application Questionnaire Form SEFA 9-A	
4.2.3 Filter Saturation Detection DH II/III	
4.2.4 Face Velocity Monitoring DH II/III	
4.3 SEFA 9 Benchmark Testing – As Manufactured	
4.3.1 Filtration and Containment	
4.3.2 Independent Testing and Validation	
4.4 Markings	
5.0 Ductless Hoods – As used	**376**
5.1 Safe Work Practices	
5.2 Recommended Usage Precautions	
5.2.1 DH I	
5.2.2 DH II	
5.2.3 DH III	
5.3 Manufacturer Approved Applications – As Used	
5.3.1 Manufacturer Approved Application Response Form SEFA 9-A	
5.4 Dedicated Usage/Change of Application Procedures/Monitoring	
5.5 Dedicated Usage Markings–As used	
5.6 Contaminated Filter Handling Procedures	
6.0 Ductless Hoods-As Installed	**378**
6.1 Test Protocol	
6.2 Frequency of Testing	
7.0 Reference Organizations	**379**
7.1 Filtration and Exposure Limitations	
7.2 Containment	
SEFA Form 9-A	**381**

SEFA 9 — Ductless Enclosures Committee Members

Co-Chairs

Kevin Gilkison - Labconco Corporation
Kevin McGough - AirClean Systems

3 Flow

Air Control

Air Master Systems

BSA Life Structures

HEMCO Corp.

Kewaunee Scientific Corp.

Lab Crafters, Inc.

© SEFA - 5th Edition Desk Reference - Version 2.0

Foreword

SEFA Profile

The Scientific Equipment and Furniture Association (SEFA) is an international trade association comprised of manufacturers of laboratory furniture, casework, fume hoods and members of the design and installation professions. The Association was founded to promote this rapidly expanding industry and improve the quality, safety and timely completion of laboratory facilities in accordance with customer requirements.

SEFA Recommended Practices

SEFA and its committees are active in the development and promotion of Recommended Practices having domestic and international applications. Recommended Practices are developed by the association taking into account the work of other standard-writing organizations. Liaison is also maintained with government agencies in the development of their specifications.

SEFA's Recommended Practices are developed in and for the public interest. These practices are designed to promote a better understanding between designers, architects, manufacturers, purchasers, and end-users and to assist the purchaser in selecting and specifying the proper product to meet the user's particular needs. SEFA's Recommended Practices are periodically updated. The Recommended Practices are numbered to include an annual suffix which reflects the year that they were updated. SEFA encourages architects to specify these Recommended Practices as follows: "SEFA 9-2020".

SEFA Glossary of Terms

SEFA has developed a Glossary of Terms (SEFA 4-2020) for the purpose of promoting a greater understanding between designers, architects, manufacturers, purchasers and end users. The terms defined by SEFA are frequently used in contracts and other documents, which attempt to define the products to be furnished or the work involved. The Association has approved this Glossary in an effort to provide uniformity among those who use these terms. Where a specific Recommended Practice contains definitions which differ from those in the Glossary of Terms, then the definitions in the specific Recommended Practice should be used.

SEFA encourages all interested parties to submit additional terms or to suggest any changes to those terms already defined by the Association. The definitions should be used to help resolve any disputes that may arise or to incorporate the applicable terms in any contract or related documents.

SEFA Disclaimer

SEFA uses its best effort to promulgate Recommended Practices for the benefit of the public in light of available information and accepted industry practices. SEFA does not guarantee, certify, or assure the safety or performance of any products, components, or systems tested, installed, or operated in accordance with SEFA Recommended Practices or that any tests conducted under its Recommended Practices will be non-hazardous or free from risk. SEFA encourages the use of third party independent testing where appropriate.

Note : ***Testing as described in this document must be performed and documented by a SEFA-approved third party testing facility. See Page 36 of the SEFA Desk Reference 5th Edition Version 3.0, or visit us at SEFALABS.COM for the most current list of SEFA-approved test labs.***

1.0 Scope

These SEFA Recommended Practices provide a comprehensive single source of knowledge pertaining to laboratory Ductless Hoods. Since the Ductless Hood is a re-circulating filtration device, which is not integral to the laboratory ventilation system, these practices will primarily address issues relating to filtration, product usage, feasibility, safety and limitations as well as manufacturer usage recommendations and manufacturer responsibility.

2.0 Purpose

To allow for the correct use and application of ductless hoods.

The purpose of these Recommended Practices is to establish manufacturer's requirements for the general design and testing of Ductless Hoods as well as guidelines and procedures for the correct specification, use, maintenance and testing of Ductless Hoods These requirements, guidelines and procedures are for Ductless Hoods that are used to protect personnel from harmful exposure to contaminants generated within the ductless hood. The individual manufacturer recommendations must be followed for each specific application and usage.

3.0 Ductless Hood Defined

A ductless hood, a/k/a (but not limited to) Ductless Fume Hood, Ductless Filtering Fume Enclosure, Portable Hood, Carbon Filtered Enclosure, Enclosure for Toxins using Re-circulating Air Filtration (E.T.R.A.F.) is an enclosure designed for the handling of contaminants, which limits the propagation toward the operator and other personnel of such contaminants. Typically, it is not attached to any external exhaust system. A Ductless Hood is equipped with its own independent ventilation system which forces the contaminated air to travel through a filter and re-circulates it within the room.

3.1 Ductless Hood Scope of Application Defined

Ductless Hoods do not have the same scope of application as standard laboratory Fume Hoods, Biological Safety Cabinets, or potent compound hoods. Ductless Hoods are only suitable for use with identified, manufacturer approved applications.

4.0 Ductless Hood – Types

4.1 Ductless Hood Filtration Categories

4.1.1 DH I

A ductless hood equipped with a filtration device designed to control non-toxic chemicals, nuisance odors, particulates.

4.1.2 DH II

A ductless hood capable of meeting all DH I requirements, and equipped with a filtration device designed to filter manufacturer approved toxic contaminants up to filter break through only. A DH II ductless hood is not designed to provide secondary containment beyond primary filter break through.

4.1.3 DH III

A ductless hood capable of meeting all DH II requirements, and equipped with a filtration device designed to filter manufacturer approved toxic contaminants beyond primary filter break through by providing secondary back-up protection. Once the primary filter break through point has been detected a DH III ductless hood should be designed to provide a period of time to continue and end an ongoing experiment with its secondary back-up filter system. The secondary filter must be of the same type of media and efficacy, as the primary filter.

© SEFA - 5th Edition Desk Reference - Version 2.0

4.2 Manufacturer Approved Applications / Misuse Prevention - As Manufactured

4.2.1 Manufacturer's Performance Information

A Ductless Hood regardless of Category is limited by the capabilities of its filtration system. The manufacturer's performance information, must be supplied for each DH II and III Ductless Hood, and is designed to clearly outline manufacturer approved applications and usage limitations and shall at least include the following:

A definition of Ductless Hood Categories identical to the one outlined in these Recommended Practices.

A copy of the SEFA 9 test results for the "as manufactured" performance test for both filtration and containment as per section 4.3 validated by an independent recognizable third party, showing retention capacities in grams/ounces for each compatible filter type. For example, this would be the retention capacity of the filter as stated by the manufacturer prior to releasing 50% of the TLV/PEL of the toxic contaminant for DH II and 1% of the TLV/PEL of the toxic contaminant for DH III.

4.2.2 Manufacturer Approved Application Questionnaire Form SEFA 9-A

Prior to approving usage, a qualified specialist or department within the manufacturer or supplier of the Ductless Hood should review all applications and determine for each the compatibility or incompatibility of the ductless hood by using form SEFA 9-A. Form SEFA 9-A is a standardized form designed to cover all pertinent questions regarding the intended usage of a ductless hood, and is necessary to determine and subsequently approve or deny usage.

The following list represents the minimum information to be provided by the customer:

- Date
- Customer's company name and address
- Customer contact name and phone#
- Intended application including list all equipment to be used inside hood
- Name of each material planned on being used and Chemical ID i.e., CAS#, EN#, etc.,
- Amount of each material
- Concentration of material i.e., full strength, dilute, percentage
- Frequency and duration of the application
- Temperature of material
- Type of container used and is the container covered or open
- Evaporation Rate
- Maximum potential spill volume
- Truthful and accurate statement

Completed by Manufacturer—Refer to § 5.3.1.

In the case of a manufacturer/supplier approved application, the resulting document shall provide all necessary information, as detailed in "As Used" section 5.3, for the correct use and maintenance of the ductless hood.

4.2.3 Filter Saturation Detection DH II/III

DH II and III Ductless Hoods require constant monitoring of filter saturation breakthrough and should be designed with a continuous audible and visual automatic saturation detection monitoring device able to detect all manufacturer approved toxic contaminants. The efficacy of the device should be such that when break through occurs, test measurements taken downstream from the filter must not exceed 50% of the TLV of the manufacturer approved toxic contaminant(s) for DH II Ductless Hoods and 1% of the TLV of the manufacturer approved contaminant(s) for DH III Ductless Hoods. The means necessary to insure the proper functioning and manual verification of the automatic filter saturation detection device should also be provided. The frequency of the verification shall be recommended by the manufacturer, but be the responsibility of the EH&S officer.

4.2.4 Face Velocity Monitoring DH II / III

A permanent face velocity monitoring device should be incorporated within all DH II and III ductless hoods. The monitoring device

should be calibrated by a face velocity traverse as recommended in ASHRAE 110-95 using the average as the set point. To ensure proper performance as recommended by the manufacturer testing should be performed at least annually.

4.3 SEFA 9 Benchmark Testing – As Manufactured

4.3.1 Filtration and Containment

DH I:

Nuisance odors only. No testing required.

DH II and III:

If manufacturers require more than one filter media type to perform the benchmark test chemicals, testing should then be performed using the appropriate filter media type.

Benchmark - Testing procedure:

This test is applicable to only Class II and Class III hoods. It is not intended for Class I type hoods used for nuisance and non toxic odors

Calibration of testing equipment— please refer to ASHRAE 110-95 for calibration guidelines.

Hood setup and face velocity measurements— the ductless hood shall be setup per manufacturer's recommendations in a location that has average cross draft of less than 30 fpm when measured 18 inches out from the face of the hood at the left and right side of the sash opening. Face velocity measurements are made by establishing an imaginary grid pattern equally divided in the vertical and horizontal positions and taking velocity readings at each grid point. Readings should be taken each second for a period of 30 seconds and averaged. Determine the average of each grid position. The measured deviation shall not vary more than +/- 20% of the overall average. Cross draft and airflow velocity measurements are made using a hot wire calibrated anemometer. Test each model (Type Test) or after modification to unit or filter. The hood face velocity shall be set by the ductless hood manufacturer. (Refer to SEFA 1-2010 Section 4.3 and/or ANSI/ASHRAE 110-1995 6.2 Face Velocity Measurements or most curent version).

Flow Visualization — discharge smoke from a smoke stick along the walls and work surface of the hood six inches back from the front of the unit. Smoke shall be carried to the back or top of the hood and be exhausted with little reverse movement. Particular attention shall be given to the corners. At no time shall smoke escape out the hood, except through the filtered exhaust. If smoke does escape out the front of the hood the hood fails the test. The filter seals and other areas of the hood where contaminate could escape shall be under negative pressure.

Containment Testing. (Refer to ASHRAE 110-1995 or most current version for specific details.) — place an exhaust duct with canopy style connection from an exhaust system with variable control over the exhaust port of the ductless hood. The exhaust system shall be set to exhaust a greater CFM than the ductless hood requires to keep any contaminates from the exhaust from leaking into the test room. Once the external exhaust system is operating, face velocity readings shall be retaken and match those previously taken with the external exhaust system off. If the face velocities have changed, reduce the exhaust system CFM to where there is no effect on the hood face velocities. The exhaust on the system must be great enough to keep the exhaust plenum area negative, but not so strong that the face velocities on the hood are affected.

Use an ITI Leak Meter or other continuous reading instrument specific for sulfur hexafluoride gas capable of 0.01 ppm detection or less.

Position the manikin in front of the hood, in a sitting position with the sampling probe 1.5" above the bottom of the sash and 3" out from the bottom sash edge. The sash shall be placed in the "designed sash position." The tracer gas test is run with the ejector placed 6 inches behind the plane of the face opening in three different positions. These positions are 12 inches from the right and left sides of the hood and at the center line of the hood. Release sulfur hexafluoride tracer gas at the rate of 4 liters/minute. Determine tracer gas concentration using leak meter or

© SEFA - 5th Edition Desk Reference - Version 2.0

other continuous reading instrument. Remove the manikin and scan the perimeter of the sash and airfoil of the hood using the leak meter probe, holding the probe approximately one inch from the hood opening. No leakage of tracer gas shall be greater than an average of 0.05 ppm in any position. Refer to ASHRAE 110-1995 for instrumentation, ejector construction and method details.

Filter Efficiency and Adsorption Capacity Tests — with the ductless hood setup per manufacturer's recommendation install the appropriate filter(s) for your test. Turn on the system and allow the hood to stabilize per manufacturer's instructions. Record relative humidity and temperature of laboratory before and after test. Temperature should be between 18°C to 22°C and relative humidity between 40% to 60%.

Evaporate one of the following listed chemicals at the indicated rates:

NIOSH Limits Chemical Family	TLV	Evaporation Rate
HCL	5 ppm	100 ppm
Diethyl Amine	10 ppm	50 ppm
Isopropyl	400 ppm	500 ppm
Toluene	100 ppm	150 ppm

The evaporation rate required is determined by calculating the mass rate of chemical needed to mix with the hood air flow (CFM) during test to create the indicated flow rates.

Suitable ways of evaporation are free surface evaporation without heat, heating the chemical in a container on a hot plate or addition of the chemical into a metal or ceramic cup heated by a hot plate using a peristaltic or other high precision positive displacement pump set to the required mass flow rate. Control the evaporation temperature to where degradation of the chemical does not occur. Example of evaporation temperature for toluene would be 140° C. Determine the evaporation rate of the chemical by weighing the container(s) before and after the evaporation, with an appropriate precision balance or scale and noting weight change per unit time. When using a pumping device to pump the chemical into a heated container the flow rate of the chemical into the container determines the evaporation rate. When using a hot plate for evaporation caution must be taken to keep the hot plate temperature below the flash point of the chemical to prevent a fire or explosion or degradation of the chemical. **Do not use open flame to heat the containers.** If additional chemicals are tested and sufficient mass cannot be evaporated to reach a challenge level of TLV or greater, a lower challenge level may be permitted as long as it is the maximum level which can be reasonably obtained and the conditions of the test are recorded.

Monitor the concentration of the test chemical in the room, in the hood, before the filter and in the exhaust stream past the filter(s) under test by using a gas chromatograph, mass spectrometer, FTIR analyzer or PID detector. Manufacture is to determine sampling points. Exhaust sampling point must be located in an area that represents the actual concentration of the exhaust. Complete mixing at the sampling point must be validated. The instrumentation used shall have a minimum detection level of 1% of the TLV or less. In the case where hydrochloric acid is tested an ion chromatograph or FTIR is recommended. Colorimetric detection tubes do not have the necessary resolution to accurately determine the concentration of the chemicals and shall only be used for the determination of HCL, if FTIR or an ion chromatograph is not available. Continuous sampling of the exhaust for acid detection can be made by using a small pump to pull the exhaust sample through a general acid colorimetric tube for the purpose of acid detection, at the rate of approximately 1.5 l/min. When the general acid colorimetric tube begins to turn pink begin sampling exhaust with HCL acid colorimetric tube, 1-10 ppm, to determine the exhaust concentration. Follow manufactures sampling recommendation when sampling with the HCL acid 1-10 ppm tube.

Exhaust air from the hood must be sampled at 15 minute time intervals. For sampling of HCL acid using colorimetric tubes, sampling must begin two hours before the end point of the test is achieved. For hoods which incorporate a secondary filter means, the exhaust of the primary filter bed ONLY will be sampled, not the exhaust of the hood itself. Continue evaporation and exhaust

sampling until chemical concentration equals the inlet concentration or the TLV, whichever is lower. For each data point, record or calculate the mass of chemical evaporated as well as chemical concentration levels in the sampled air streams. Sample and record room concentrations at a sampling point one foot out from the center point of the sash. In cases where the time of testing goes beyond 8 hours, the hood and test apparatus shall be turned off and left in a stagnant mode until the next testing period. During this stagnate mode, the hood shall be disconnected from any active exhaust systems to prevent airflow through the filters. At the beginning of the next test period record and graph all data. Be certain chemical containers are sealed to prevent evaporation. The test output shall be a table or graph of the mass of the test chemical evaporated plotted as the x-axis vs. the concentration in ppm of the chemical concentration found in the hood exhaust on the y-axis. Conditions of the test are to be provided on the graph or separate list that includes temperature and humidity of the test room, CFM and face velocity, evaporation rate, grade and concentration of the chemical, current listed TLV, start and stop of the test, amount of filter media and type, method of evaporation, inlet concentration and total test time. The name and model number of the unit tested is also to be provided with the report.

4.3.2 Independent testing and validation

The manufacturers' benchmark testing as described in 4.3.1 shall be validated by an independent recognizable third party. Manufacturers should include a copy of the third party testing in their technical manual.

4.4 Markings

Ductless Hoods should be clearly identified with the words "DUCTLESS HOOD" prominently displayed in large letters on the front of the product in order to differentiate them from conventional ducted Fume Hoods.

DH ratings, identified in this work practice as DH I, II and III, should also be prominently displayed in large letters on the front of the product, along with reference to SEFA 9. The DH I Ductless Hood label should contain a message noting their inability to provide protection for anything other than nuisance odorous compounds. The DH II Ductless Hood label should contain a message requiring the immediate suspension of usage at the time of saturation detection.

An area on the Ductless Hood should be provided in plain view for the placement of form SEFA 9-A. If removed the form shall let the following words appear: "NOT RECOMMENDED FOR USE WITHOUT CURRENT APPLICATION APPROVAL FORM SEFA 9-A IN PLACE."

A sticker stating the recommended sash/door position should be placed on the enclosure. The label should also indicate if the ductless hood is only able to achieve SEFA 9 containmentcompliance in a specific position. The filtration device type and name should appear in plain view and be easily identifiable by the operator.

5.0 Ductless Hoods – As used

5.1 Safe Work Practices

Operators should use Ductless Hoods in accordance with their organization's safety guidelines and have a clear understanding of the limitations and capabilities of their Ductless Hood prior to usage. Always refer to completed SEFA 9A prior to usage. Also refer to current SEFA 1-2010 Section 6 for applicable general safe usage recommendations.

5.2 Recommended Usage Precautions

In general, Ductless Hoods are not recommended for usage with unknown chemicals or reactions. Ductless Hood usage should be limited to manufacturer approved applications only (section 5.3).

5.2.1 DH I

DH I Ductless Hoods should only be recommended for use with applications that would normally be performed on the open bench

© SEFA - 5th Edition Desk Reference - Version 2.0

without protection. DH I Ductless Hoods should not be used with toxic contaminants

5.2.2 DH II

DH II Ductless Hoods should not be recommended for use unless their application has been pre-approved by the manufacturer/supplier using form SEFA 9-A, which should be posted on the ductless hood at all times in accordance with section 5.3.

DH II Ductless Hoods should not be recommended for use with toxic contaminants that do not have a reported TLV/PEL value.

DH II Ductless Hoods should only be recommended for use with applications where continuous monitoring and detection of filter break through is available

Since a DH II Ductless Hood provides protection only up to filter break through, its use must be suspended once filter break through detection occurs. Refer to section 4.2.3

5.2.3 DH III

DH III Ductless Hoods should not be recommended for use unless their application has been pre-approved by the manufacturer/supplier using form SEFA 9-A in accordance with section 5.3.

DH III Ductless Hoods should only be recommended for use with applications where permanent monitoring and detection of filter break through is available. Refer to section 4.2.3

5.3 Manufacturer Approved Applications – As Used

The manufacturer or supplier of the Ductless Hood should approve all applications prior to usage. The Ductless Hood operator should limit their usage to the manufacturer approved applications only. The notion of dedicating a Ductless Hood to a specific manufacturer approved application plays a crucial role in insuring safe Ductless Hood usage. The formal response form SEFA 9-A given to the Ductless Hood operator is a necessary document as it represents an agreed upon understanding of correct dedicated use between the supplier and the operator. It is therefore required for Ductless Hood manufacturers/suppliers to integrate within their organization the means necessary to scientifically approve each potential application.

It is the responsibility of the end user to advise the manufacturer of the Ductless Hood and gain the approval of all applications in writing prior to usage.

5.3.1 Manufacturer Approved Application Questionnaire Form SEFA 9-A

Form SEFA 9-A is a standardized form designed to answer all pertinent questions regarding the intended usage of a ductless hood and ultimately guide the end-user in the correct use of their ductless hood. In the case of a manufacturer/supplier approved application, form SEFA 9-A should be posted in the space provided on the ductless hood at all times. Response form SEFA 9-A should include:

- The application approval reference number;
- The approved application and corresponding list of approved toxic substances;
- The approval date;
- The approved filter type;
- The estimated filter life;
- The filtration system date of first use and estimated date of replacement;
- Information regarding the automatic filter saturation detection system;
- The model and serial number of the ductless hood;
- A warning dedicating the ductless hood to the approved application only;
- A warning for Category II ductless hoods indicating the need to stop the procedure immediately following filter saturation detection;

5.4 Dedicated Usage / Change of Application Procedures / Monitoring

Ductless Hood operators should limit their usage to manufacturer approved applications only, as shown on Form SEFA 9-A.

Operators shall obtain prior written re-approval from the manufacturer every time an application varies in any way from the initial approved usage. There is no difference between a change of application and a new usage qualification.

5.5 Dedicated Usage Markings – As used

Manufacturer approved application form SEFA 9-A should be posted in the place provided on the ductless hood at all times. A current form shall replace the previous form every time an application varies from the initial manufacturer approved application.

5.6 Contaminated Filter Handling Procedures

The waste disposal method for your contaminated filters depends on the type of toxic contaminant(s) introduced into the filter by the Ductless Hood operator. The operator should contact the individual or department within their organization responsible for controlling the disposal of all hazardous waste. The filter should be removed in accordance with local ordinances.

6. 0 Ductless Hoods – As Installed

6.1 A test protocol must be provided by the manufacturer for DHII and DHIII hoods to verify that the unit is functioning to manufacturer's specifications. The "As Installed" test protocol must be sufficient to validate manufacturer's claims for face velocity, base containment, filter sealing and instantaneous filtration, as well as verifying the display of face velocity and emissions monitoring systems.

Manufacturer's may make available, either for sale or loan, testing kits and instruction manuals to allow users or third party certifiers to carry out test protocols in the field.

The test protocol must include:

1. Test procedure for verifying face velocity of hood. Procedure should include requirements for testing the recommended face velocity settings if face velocity adjustment is provided by the control system.

2. Test procedure for verifying base containment using smoke stick or other form of flow visualization.

3. Test procedure for verifying filter seals and instantaneous removal of contaminant by primary filter pack for DHII and DHIII hoods and secondary filter pack for DHIII hoods.

(a) If surrogate chemical challenge is specified, the recommended chemical must be of low toxicity and readily available for use, i.e. isopropyl alcohol or similar. Chemical surrogate should be of same chemical family as the chemical for which the hood was specified, if possible.

(b) Test should not require a large amount of chemical to be adsorbed, as not to shorten filter life.

Test procedure to verify operation of all monitoring systems.

(a) Face velocity monitors may be verified simultaneously with actual face velocity test above.

(b) Test procedure should contain provisions for verifying alarm functions.

6.2 Frequency of Testing

The Manufacturer should specify the events which would trigger the need of such testing. At a minimum, the tests should be conducted:

After initial installation but BEFORE first use.
After major repair or refurbishment of hood.
After relocation of hood.

It is the responsibility of the user facility EH&S officer to establish test plans to verify proper function during the life of the unit.

© SEFA - 5th Edition Desk Reference - Version 2.0

7.0 Reference Organizations

7.1 Filtration and Exposure Limitations

(USA) ANSI/AIHA Z9.5 - 2003
(USA) NIOSH Pocket Guide to Chemical Hazards
(USA) OSHA Regulation 1910:1450
(CANADA) CSA Z316.5 -1994
(FRANCE) AFNOR NFX 15-211
(AUSTRALIAN) Re-circulating Fume Cabinets AS 2243.9

7.2 Containment

(USA) ASHRAE 110-95
(FRANCE) AFNOR NFX 15-210
(U.K.) XP X 15-203
(GERMANY) DIN 12 924

SEFA FORM 9-A - Application Questionnaire

(See SEFA 9-2010 §4.2.2)

Customer :		
Address:		
Contact:	**Phone:**	**Date:**

Description of Application: *(Customer to describe the process to be performed inside the hood including all equipment to be used inside hood)*

Completed by Customer								Completed by Manufacturer			
Chemical ID (ie., CAS#, EN#, etc.)	Amount	Concen-tration	Frequency/ Duration	Tempera-ture	Container Type—Covered/ Open	Evapora-tion Rate	Maxi-mum Potential Spill Volume	Exp Reference	Exp Limit	Limit Type	MSDS

I, _____ , in my capacity as _____ of _____, certify to the best
(Print Name) (Title/Position) (Customer Company)
of my knowledge that all data and information submitted in this Application/SEFA Form 9-A, is truthful and accurate and that no material fact has been omitted.

(Signature) (Date)

SEFA FORM 9-A—Manufacturer's Response

(See SEFA 9-2010 § 5.3.1)

Manufacturer's Name:_____

Address:_____

_____

Phone:_____

Approval Reference No.: _____

Model and Serial No._____

Manufacturer's Approved Filtration Category: ☐DH I ☐DH II ☐DH III

Filtration System Date of First Use _____ Estimated Replacement Date _____

Approved Filter Type Estimated Filter Life

Approved Application: *(Manufacturer to provide information regarding the automatic filter saturation detection system as well as the list of approved toxic substances)*

Application: ☐ **Approved**

☐ **Disapproved**

Print Name: _____

Signature: _____ **Date:** _____

— WARNINGS —

- DUCTLESS HOOD OPERATORS SHALL LIMIT THEIR USAGE TO MANUFACTURER APPROVED APPLICATIONS AS SHOWN ON THIS SEFA FORM 9A.

- OPERATORS SHALL OBTAIN PRIOR WRITTEN RE-APPROVAL FROM THE MANUFACTURER EVERY TIME AN APPLICATION VARIES IN ANY WAY FROM THE INITIAL APPROVED USAGE. THERE IS NO DIFFERENCE BETWEEN A CHANGE OF APPLICATION AND A NEW USAGE QUALIFICATION.

- CATEGORY II DUCTLESS HOODS MUST STOP PROCEDURE IMMEDIATELY FOLLOWING FILTER SATURATION DETECTION.

© SEFA - 5th Edition Desk Reference - Version 2.0

Scientific Equipment & Furniture Association
Recommended Practices

SEFA 10-2020
Adaptable Laboratory Furniture Systems

SEFA World Headquarters

65 Hilton Avenue
Garden City, NY 11530
Tel: 516-294-5424
www.sefalabs.com

SEFA SPELLS SAFE

Table of Contents

	Page
Committee Members	**386**
Foreword	**387**
SECTIONS	
1.0 Scope	**388**
2.0 Purpose	**388**
3.0 Definitions	**388**
3.1 Adaptable Laboratory Casework Defined	
3.2 Characteristics of Adaptable Casework Systems	
3.3 Vibration	
3.4 Mobile Casework	
3.5 Glossary of Terms	
3.6 Codes and Standards	
4.0 Classifying Adaptable Laboratory Furniture Systems	**392**
4.1 Description of Classes	
5.0 Adaptable Laboratory Furniture System Class Data Sheets	**394**
5.1 Class1	
5.2 Class 2	
5.3 Class 3	
5.4 Class 4	
5.5 Class 5	
5.6 Class 6	
5.7 Class 7	
5.8 Class 8	
6.0 Test Criteria	**410**
6.1 Purpose of Test	
6.2 Description of Test Bench	
6.3 Live Load	
6.3.1 Each Shelf	
6.3.2 Worksurface	
6.4 Strength Test Configuration 1	
6.4.1 Test Procedure	
6.4.2 Acceptance Criteria	
6.4.3 Test Procedure Continued	
6.4.4 Acceptance Criteria	
6.5 Stability Test Anchored Units	
6.5.1 Test Procedure	
6.5.2 Acceptance Criteria	
6.6 Resistance to Overturning	
6.6.1 Test Procedure	
6.6.2 Acceptance Criteria	
6.7 Strength Test Configuration 2	
6.7.1 Test Procedure	
6.7.2 Acceptance Criteria	
6.8 Stability Test Anchored Units	
6.8.1 Test Procedure	
6.8.2 Acceptance Criteria	
6.9 Resistance to Overturning	
6.9.1 Test Procedure	
6.9.2 Acceptance Criteria	
6.10 Strength Test Configuration 3	
6.10.1 Test Procedure	
6.10.2 Acceptance Criteria	
6.11 Stability Test Anchored Units	
6.11.1 Test Procedure	
6.11.2 Acceptance Criteria	
6.12 Resistance to Overturning	
6.12.1 Test Procedure	
6.12.2 Acceptance Criteria	
6.13 Strength Test Configuration 4	
6.13.1 Test Procedure	
6.13.2 Acceptance Criteria	
6.14 Stability Test Anchored Units	
6.14.1 Test Procedure	
6.14.2 Acceptance Criteria	
6.15 Resistance to Overturning	
6.15.1 Test Procedure	
6.15.2 Acceptance Criteria	
7.0 Product Testing	**417**
7.1 Forms	
Appendix	**421**
A Class Adaptability Rating Chart	
B Class Functionality Rating Chart	

SEFA 10 Committee Members

Co-Chairs

Chip Albright - Creative Solutions
Bob DeLuca, Jr., - Lab Crafters, Inc.

AirMaster Systems

BSA Life Structures

Bedcolab, Ltd.

Bostontec by Case Systems

CHC Lab

Cabinets by Design

Chicago Faucet

CiF Casework Solutions

Dalton USA

Diversified Woodcrafts

Flad Architects

HEMCO Corporation

Institutional Casework, Inc.

Kewaunee Scientific Corporation

LM Air Technologies, Inc.

Labguard

Lexus Muebles

Mott Manufacturing

Oriental Giken

RFD

Scientific Plastics

SmithGroupJJR

Staubli

TFI Inline Design Corporation

TMI Systems Design Corporation

Ultra Labs, LLC.

VWR International

Vacuubrand

Water Saver Faucet Company

©SEFA 5th Edition Desk Reference - Version 3.0

Foreword

SEFA Profile

The Scientific Equipment and Furniture Association (SEFA) is an international trade association comprised of manufacturers of laboratory furniture, casework, fume hoods and other related products, along with members of the design and installation professions. The Association was founded to promote this rapidly expanding industry and improve the quality, safety and timely completion of laboratory facilities in accordance with customer requirements.

SEFA Recommended Practices

SEFA and its committees are active in the development and promotion of Recommended Practices having domestic and international applications. Recommended Practices are developed by the association taking into account the work of other standard writing organizations. Liaison is also maintained with government agencies in the development of their specifications.

SEFA's Recommended Practices are developed in and for the public interest. These practices are designed to promote a better understanding between designers, architects, manufacturers, purchasers, and end-users and to assist the purchaser in selecting and specifying the proper product to meet the user's particular needs. SEFA's Recommended Practices are periodically updated. The Recommended Practices are numbered to include an annual suffix which reflects the year that they were updated. SEFA encourages architects to specify these Recommended Practices as follows: "SEFA 10-2020".

SEFA Glossary of Terms

SEFA has developed a Glossary of Terms (SEFA 4-2020) for the purpose of promoting a greater understanding between designers, architects, manufacturers, purchasers and end users. The terms defined by SEFA are frequently used in contracts and other documents, which attempt to define the products to be furnished or the work involved. The Association has approved this Glossary in an effort to provide uniformity among those who use these terms. Where a specific Recommended Practice contains definitions which differ from those in the Glossary of Terms, then the definitions in the specific Recommended Practice should be used.

SEFA encourages all interested parties to submit additional terms or to suggest any changes to those terms already defined by the Association. The definitions should be used to help resolve any disputes that may arise or to incorporate the applicable terms in any contract or related documents.

SEFA Disclaimer

SEFA uses its best effort to promulgate Recommended Practices for the benefit of the public in light of available information and accepted industry practices. SEFA does not guarantee, certify or assure the safety or performance of any products, components, or systems tested, installed, or operated in accordance with SEFA Recommended Practices or that any tests conducted under its Recommended Practices will be non-hazardous or free from risk. SEFA encourages the use of third-party independent testing where appropriate.

Note : ***Testing as described in this document must be performed and documented by a SEFA-approved third party testing facility. See Page 36 of the SEFA Desk Reference 5th Edition Version 3.0, or visit us at SEFALABS.COM for the most current list of SEFA-approved test labs.***

1.0 Scope

SEFA 10 is intended to provide designers, architects, purchasers, end users, and manufacturers workable tools for evaluating various types of adaptable laboratory furniture systems. This Recommended Practice provides descriptions of various adaptable laboratory furniture systems and evaluates important features of each system. Adaptability, strength, and functionality are rated for each adaptable system described, along with how each system integrates with laboratory services and utilities.

This document is inclusive of glossary/definitions, illustrations, descriptions, classifications and testing protocols. There is no material bias in this document.

2.0 Purpose

The purpose of this document is to describe the distinguishing characteristics of adaptable laboratory furniture systems. Each class designation identifies the key attributes for purposes of evaluating the suitability for the intended use. These classes apply to products specifically designed and manufactured for installation and use in a laboratory. All materials shall be laboratory grade and of appropriate quality and type for the purpose intended. Construction shall conform to the best practices of the scientific/laboratory furniture industry. Product finish shall be resistant to chemical spills and splashes common to a typical laboratory operation. Structural strength shall be adequate to support heavy laboratory apparatus, storage containers and heavy instruments. Products should interface with the appropriate lab services (plumbing, electrical, communication).

This document provides a common language to describe the various classes of furniture along with an overview of the generic attributes as a way to evaluate and specify a product class that is appropriate for the intended use and specific needs of an application.

3.0 Definitions

3.1 Adaptable Laboratory Furniture Systems Defined

Adaptable Laboratory Furniture systems are defined as modular furniture assemblies consisting of individual components including support structures, cabinets and storage units, worksurfaces, shelving, and accessories. This Recommended Practice includes classifications for different types of these systems based on a rating scale beginning with the least adaptable laboratory furniture system to the most adaptable system.

3.2 Characteristics of Adaptable Laboratory Furniture Systems

Adaptable Laboratory Furniture Systems are designed from modular components to create laboratory furniture assemblies that accommodate reconfiguration and/or relocation. These systems consist of pre-engineered components that are reusable. Adaptable Laboratory Furniture systems typically allow for some degree of component adjustability that may include shelving, cabinetry, worksurfaces, and utilities. Some systems require attachment to the building structure, and some are freestanding or mobile.

3.3 Vibration

Floor mounted and adaptable laboratory furniture systems have differing attributes regarding vibration isolation based on several factors. These include the vibration stability of the building structure, how the furniture is attached to the structure, how the system transfers vibration from one component to another, and how independent units are able to isolate vibration. The laboratory designer needs to take all factors into account to properly address the vibration isolation needs of the equipment being used in the laboratory. Manufacturers of different systems can recommend approaches to vibration isolation based on the individual requirements of the lab.

©SEFA 5th Edition Desk Reference - Version 3.0

3.4 Mobile Cabinet

A mobile cabinet is generally defined as a free standing base cabinet storage device mounted on casters or glides. This style of casework is designed to be easily relocated by the lab user. Several factors need to be considered when specifying mobile casework. These include the load capacity, the stability of the units in both the unloaded and loaded condition, and how the units integrate with the laboratory furniture system. Common options designed to improve stability include lockable casters, counter weighting, anti-tip devices, and the use of interlocking drawer restriction hardware on multiple drawer units. Maximum 3/4 extension drawer slide is recommended for the top drawer. The laboratory designer needs to take all factors into account to properly design the mobile units for the specific application. Manufacturers of mobile cabinets can recommend approaches based on the individual requirements of the lab.

3.5 Glossary of Terms

Access Panel: Removable panel for access to utility chase.

Adaptable Casework: Modular base and wall cabinets, display fixtures and storage shelves. The generic term for both "boxes" and special desks, benching systems instrumentation and equipment support tables and transporters.

Adaptable Laboratory Furniture: A generic term for modular base and wall cabinets, display fixtures, storage shelves, benching systems, instrumentation and equipment support tables and transporters, and other structural components that create bench assemblies that allow for reconfiguration and/or adjustability.

Adaptable Systems: A group of interacting structural supports, casework and utility services that are independent elements forming or regarded as forming a collective entity.

Adjustable: The ability to adjust casework components such as cabinets, shelving, worksurfaces, table frames, legs or accessories in the vertical and/or horizontal direction.

C-Frame: A supporting floor-based leg assemby designed in a c-shape to support a surface. Upper and lower horizontal tubes are designed to support suspended base and wall cabinets. Optional slotted vertical supports are designed to support shelving.

Cabinets (Base): A base cabinet is a storage device consisting of two ends, a back, and a face. The face may be open, to access the storage area, or may be outfitted with one or more drawers and/or door(s). The base cabinet may or may not have a top. A base cabinet is always mounted and/or set on the floor and supports a surface.

Cabinets (Mobile): A base cabinet storage device consisting of four casters with different configurations of door and drawers. A mobile cabinet can consist of an interlocking drawer device, gang locking mechanism, anti-tip devices and counter weight for safety applications.

Cabinets (Suspended): A base cabinet storage device consisting of different configurations of doors and drawers. The base cabinet is suspended from a table frame or rail system by means of a mechanical device. The base cabinet is designed to be repositioned or removed.

Cabinets (Tall): A tall cabinet is a storage device that consists of two ends, a back and a face. The face may be open to access the storage area or may be outfitted with one or more drawers and/or door(s). A tall cabinet is always mounted on the floor and is nominally 84".

Cabinets (Wall): A wall cabinet is a storage device consisting of two ends, a back, and a face. The face may be open to access the storage area or may be outfitted with one or more drawers and/or door(s). A wall case is typically mounted to a wall or attached to a support structure.

Cantilevered: A bracket or frame supporting a surface tied to a support structure.

Carts: See instrument carts

Core: The structural element of a Class 4 core based casework system. The core typically supports casework elements such as table frames,

worksurfaces, suspended cabinetry, shelving and accessories. It is typically fixed in place and is designed to house plumbing , electrical, and data piping and wiring. Also see "Module".

Chase (Plumbing Area): Space located behind the back of the base cabinet used to house plumbing, electrical lines, or data lines.

Corner Post: Two-way or three-way structural connectors designed to accommodate 90 degree intersections of cores, frames, or panels.

Deflection: The movement of a structure or structural part as a result of stress or weight loads.

Docking Station: A support structure designed for centralized distribution of utilities. Designed to be used in conjunction with table, carts and transporters.

Drain Line: The pipe or tubing used to connect the sink tail piece or trap to the building waste line.

Equipment Rack: A movable or mobile racking system that accommodates laboratory equipment or instrumentation. Shelving enables vertical stacking of equipment.

Face Inserts: A removable panel or insert which can be removed for access to a utility chase or service area.

Filler Panel: A panel used to close an open space between a unit and a wall or between two units.

Floor Mounted: Traditional casework construction where the cabinet is supported and attached to the floors and walls of the building.

Freestanding: Requiring no support or fastening to other structures.

Interchangeable: Casework system components that can be utilized in like sized system elements.

Instrument Cart: A mobile structure designed to support and transport instrumentation and laboratory equipment. Components can be independent and reconfigurable.

Island Core: A vertical support utility chase designed to support cantilevered worksurfaces, storage units and service outlets and fittings. Island units are free-standing and not tied to the building structure other than the floor.

Manifold: A fitting or pipe with many outlets or connections relatively close together.

Mobile Casework: see Cabinets (Mobile)

Module: see Core —The structural element of a Class 4 core based casework system. The core typically supports casework elements such as table frames, worksurfaces, suspended cabinetry, shelving and accessories. It is typically fixed in place and is designed to house plumbing , electrical, and data piping and wiring.

Modular: Casework and casework system designs that use a standard set of dimensions for the key elements of the system.

Movable Casework: see Cabinets (Mobile)

Overhead Service Carrier (Horizontal and Vertical): Overhead service carriers are designed to deliver ceiling fed utilities in pre-determined, repeatable, patterns incorporating valves, connections, outlets, and other distribution systems.

P-Frame: A system consisting of an enclosed utility chase supported by p-shaped support legs. The p-shaped support legs are either fixed in height or height adjustable through a telescoping inner leg member. The modular utility chase houses service lines and provides support for table frames and storage components.

Panel Assembly: Panel assemblies provide support structures where no plumbed services are required. Structural support extends both above and below the work surface height.

Panel-supported: Individually connected panels and work surface, filing, storage, and shelving components and accessories that receive their primary support from the panels and that, when combined, form complete workstations.

Peninsula Core: A vertical support utility chase designed to support cantilevered worksurfaces,

©SEFA 5th Edition Desk Reference - Version 3.0

storage units and service outlets and fittings. Peninsula units are free-standing and can be tied to the building structure. Peninsula units run perpendicular to the perimeter casework and utility chase of the lab module.

Pipe Support: A rack of framework located in the service tunnel to support the service lines.

Power Pole: Power poles are used between corner posts, panel connections, tables and the ceiling to conceal and route electrical, data and communication wiring.

Quick Connect: Devices used in place of the serrated tip where quick connect requirements are needed for water, air, and non-corrosive gases. Typically associated with utility docking stations and overhead service carriers.

Reagent Cap/Ledge: A surface that is provided down the middle of center tables, island or peninsulas to provide a means to support mechanical and electrical services and service fittings as needed.

Relocatable: A casework system or component that can be moved without modification.

Seismic Kit: A brace kit designed to be tied to a structural support and the building structure to meet seismic requirements occurring in earthquake zones.

Service: The supplying of utilities or commodities such as water, air, gas, vacuum, and steam as required in hospital or laboratory functions. This can also refer to power or data.

Service Bridge: An elevated horizontal utility bridge that provides access to service fixtures and an obstruction free work area. Service bridge houses electrical, data, media, lighting and chase for localized exhaust.

Service Delivery Modules: Any number of utility delivery modules that house electrical, plumbing, communication service fitting i.e. overhead service carriers, service pedestal, docking stations, etc.

Service Line: Pipe or tubing used to convey the service, gas or liquid, from the building service line to the service fitting on the laboratory furniture or equipment.

Service Pedestal: Service pedestals include electrical outlet boxes, service fittings, and other utility outlets that are mounted to a surface or reagent ledge.

Service Tunnel or Service Chase: Area in back of or between the backs of base cabinets and under the working surface provided to allow room for several lines.

Service Turret: An enclosure that projects above the table top to provide room for the service line to be brought up through the table top or be connected to the service fittings that are mounted on the outside surface of the enclosure.

Service Umbilical: A fully enclosed chase containing service lines extending from the ceiling area above the laboratory bench into the service tunnel of the same laboratory bench.

Shelving: A flat surface fastened horizontally to a cabinet interior or a wall used to hold objects.

Shelving (Cantilevered): A flat surface fastened to a vertical support that is slotted to accept brackets that enable the shelf to be repositioned vertically.

Strength: Known also as "modulus of rupture" or "flexural strength" and is the ultimate or breaking strength. Generally measured by supporting a strip of material across two supports and applying a load between these supports. By computation the strength values can be used to determine the load-carrying ability of the product and may be used to compare strengths of different products.

Support Structures: Vertical and horizontal structural supports that support storage components, utility delivery systems and work surfaces.

Suspended: Typically referring to casework and laboratory furniture accessories suspended from a frame and/or rail system.

Tables: An article of furniture having a flat, horizontal surface supported by one or more support members (legs), and a frame (apron).

Tables (Movable): An article of furniture having a flat, horizontal surface supported by one or more

support members (legs), and a frame (apron). Leg members are equipped with a leveling and/or support device that does not require the table to be permanently fixed to the building structure.

Tables (Mobile): An article of furniture having a flat, horizontal surface supported by one or more support members (legs), and a frame (apron). Leg members are equipped with a caster device that enables the support structure to be freely transported throughout the building structure.

Table Frame: Support structure supporting a worksurface. A table frame can be a free-standing unit or cantilevered from a vertical support. Table frames may also support casework and accessory components.

Transporters: Any number of cart or table delivery modules that transport and store laboratory equipment and instrumentation, i.e. instrument carts, mobile tables, and mobile cabinets, etc.

Utilities: Plumbing, electrical, and/or data devices and their associated piping, wiring, conduit, etc.

3.6 Codes and Standards (Related to)

SEFA 3 – Recommended Practices for Work Tops
SEFA 4 – Glossary of Terms
SEFA 8 – Recommended Practices for Casework
UL 61010A-1 – Electrical Equipment for Laboratory Use
UL 962 – Household and Commercial Furnishings

4.0 Classifying Adaptable Furniture Systems

The adaptable systems described in this Recommended Practice have been classified based on a rating scale beginning with the least adaptable laboratory furniture system to the most adaptable system. An adaptability chart (see Appendix A) was created to define the common tasks associated with laboratory furniture adaptability, and assigns each system a numerical scoring range based on how that particular task can be accommodated by the particular adaptable system. The total point range for a particular system determines its position in the classification, from lowest (least adaptable) to highest.

4.1 Description of Classes

Class 1 – FIXED FLOOR MOUNTED AND WALL SUPPORTED

Floor mounted casework utilizes traditional base cabinet construction which is supported and attached to the floors and walls of the building. The cabinetry can be either built-in or modular. Worksurfaces are mounted to the top of the base cabinets in continuous lengths.

Class 2 – WALL RAIL SUPPORTED

Wall rail casework systems use a wall mounted fixed horizontal and/or vertical support rail from which the cabinetry is hung. The rail can be positioned to support under counter base units, above counter wall cases, shelving, or other ancillary items. The worksurface is typically mounted to the under counter base units, although independently supported worksurfaces can be utilized. Some systems allow for hanging the casework and worksurface at varying heights.

Class 3 – SELF SUPPORTING FRAME

Self Supporting Frame casework systems utilize a floor supported cantilevered support frame (C-Frame). Some systems are fully cantilevered; some utilize a front leg for added strength and stability. The frame can be worksurface height or also include above counter framing. Base cabinets, upper cabinets, worksurfaces, shelving, service utility distribution, and ancillary items can be suspended from the frame structure. Typically, the frame utilizes a support leg structure connected by horizontally run support members. The frame can be constructed to provide a chase for horizontally run services beneath the worksurface and behind the base cabinets. Typically, the worksurfaces are supported independently of the cabinets, allowing for cabinet relocation horizontally within the structure. Some systems are designed with height adjustable support legs. Self supporting frame systems can also be used in conjunction with mobile or floor mounted casework.

©SEFA 5th Edition Desk Reference - Version 3.0

Class 4 – CORE BASED

Core based casework systems utilize a floor mounted support module (core) from which table frames, upper cabinets, shelving, service utility distribution, and ancillary items are suspended. The core module is typically anchored to the floor and/or adjacent walls or structural members, to provide a self-supporting structure for all system components. Core modules can be worksurface height or also include an above counter structure. The core modules provide a chase for horizontally and vertically run services. The core modules can be provided with enclosure panels or be open. Base cabinets can be floor mounted or mobile in front of the support module, or suspended from table frames supported by the core module. Typically, individual core modules are provided in varying lengths and are combined to create full length assemblies. Table frames with work surfaces and shelving are suspended from the core modules. Typically the Core module incorporates adjustment slots for vertical height adjustability of worksurfaces, shelving and ancillary items.

Class 5 – PANEL BASED

Panel based systems are similar to Core based systems except they utilize a narrow support module, typically 6" or less. This narrow panel design limits the available space for service utility distribution. These panel assemblies are sometimes used as wall partitions, and can include features such as glass inserts, doors, and other features associated with internal wall partitions. These systems can require attachment to overhead structures in addition to floor and/or wall anchoring.

Class 6 – TABLE BASED

Table based systems use independent floor mounted self-supporting tables as the key component. They are used in conjunction with separate wall mounted or structural upper storage systems. The tables can be adjustable in height, and can be designed to support suspended base cabinets, and/or floor mounted or mobile base units. For this class, these tables do not have above worksurface structures integrated into the table. Utilities, sinks, and other fixed elements are typically separate from the tables, allowing the tables to be easily relocated.

Class 7 – FREE STANDING WORKSTATION

Free Standing Workstations are table based systems utilizing floor mounted tables as the key component. The workstation can be worksurface height or incorporate above counter structure. The workstations can incorporate either adjustable height or fixed height worksurfaces. Base cabinets can be mobile, floor mounted, or suspended. Upper cabinets, worksurfaces, shelving, service utility distribution, and ancillary items can be suspended from the frame structure. Free Standing Workstatons with above counter structures can be preplumbed and prewired, and used in conjunction with ceiling mounted service utility distribution systems. Typically, Free Standing Workstations incorporate adjustment slots for vertical height adjustability of worksurfaces, shelving and ancillary items. Free Standing Workstations are not anchored to the building, allowing for simple relocation.

Class 8 – MOBILE WORKSTATION

Mobile Workstations are similar to Free Standing Workstations, but are typically mounted on casters to accommodate simple relocation. The workstation can be worksurface height or incorporate above counter structure. The workstation can incorporate either adjustable height or fixed height worksurfaces. Base cabinets can be mobile, floor mounted, or suspended. Upper cabinets, worksurfaces, shelving, service utility distribution, and ancillary items can be suspended from the frame structure. Mobile Workstatons with above counter structures can be preplumbed and prewired, and used in conjunction with ceiling mounted service utility distribution systems. Typically, Mobile Workstations incorporate adjustment slots for vertical height adjustability of worksurfaces, shelving and ancillary items.

5.1 CLASS 1 – FIXED – FLOOR MOUNTED & WALL SUPPORTED CASEWORK

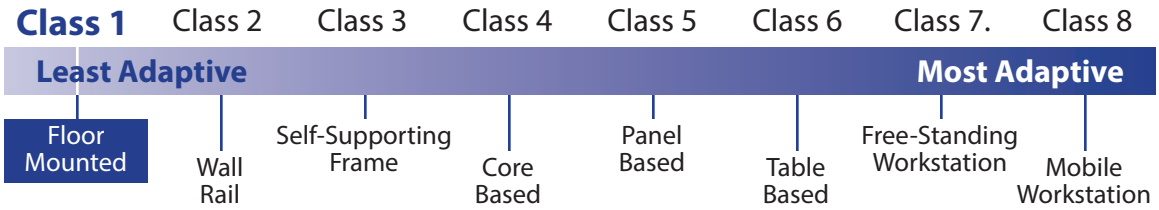

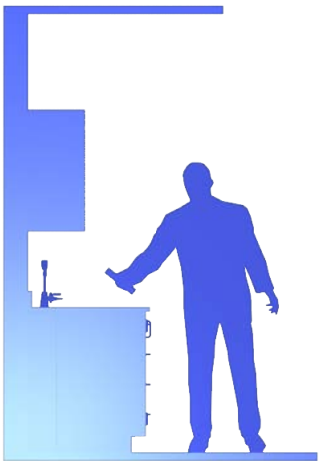

Class 1 – FIXED CASEWORK

Fixed or floor mounted casework utilizes traditional base cabinet construction supported and attached to the floors and walls of the building. The cabinetry can be either modular or custom built. Worksurfaces are mounted to the top of the base cabinets in continuous lengths.

Adaptability Features:

- Cabinets and worksurfaces are not adjustable or easily reconfigurable. If the cabinetry is modular, casework can be uninstalled then reinstalled in a new configuration or location. New components may be required for relocation.
- Wall cases or shelving and can be fixed or adjustable depending on design.
- Utilities are typically mounted directly to the worksurfaces or casework. Horizontal pipe chase areas are created by offsetting the cabinets from the wall and running utilities within the space.

©SEFA 5th Edition Desk Reference - Version 3.0

5.1 CLASS 1 – FIXED – FLOOR MOUNTED & WALL SUPPORTED CASEWORK

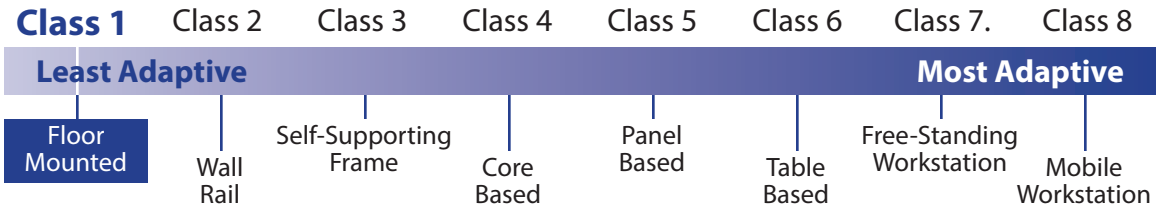

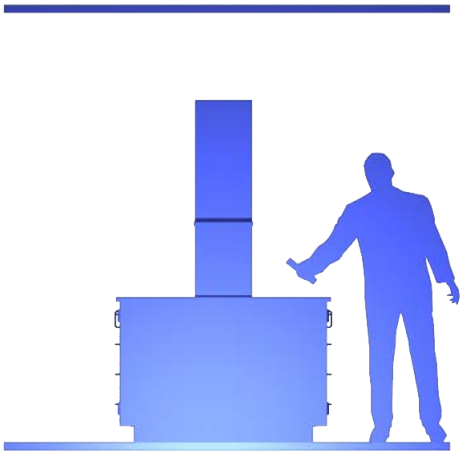

Functionality Features:

- Fixed casework can be designed to provide a high degree of cleanability. Cabinets can be caulked or sealed to the wall, base molding can be sealed to the floor, and other cracks and crevices can be sealed or minimized. Continuous worksurfaces and sealable joints are excellent for wet lab applications.
- Fixed casework provides the highest storage volume rating, with little unusable space.
- Strength, stability and vibration control rate high when fixed casework is properly anchored to the building structure.
- In lieu of a test bench, see SEFA 8 for laboratory grade performance criteria

Class 1 – ADAPTABILITY RATING CHART *

Action	Class 1
Relocate a Cabinet	1 – 2
Relocate a Bench	1 – 2
Adjust a Worksurface	0 – 0
Add a Shelf	2 – 4
Adjust a Shelf	2 – 4
Relocate a Utility	1– 1
Adaptability Range	**7 – 13**

Class 1 – FUNCTIONALITY RATING CHART **

Action	Class 1
Cleanability	3 – 4
Storage Volume	4 – 4
Strength – Overall	4 – 4
Strength – Worksurface	1 – 4
Stability – Tipping	0 – 1
Functionality Range	**12 – 17**

*** See Appendix A**
**** See Appendix B**

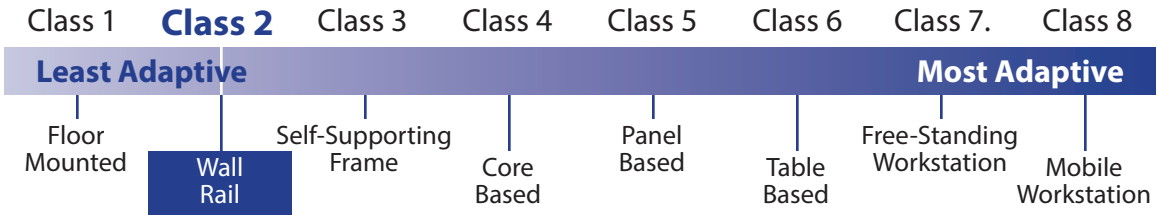

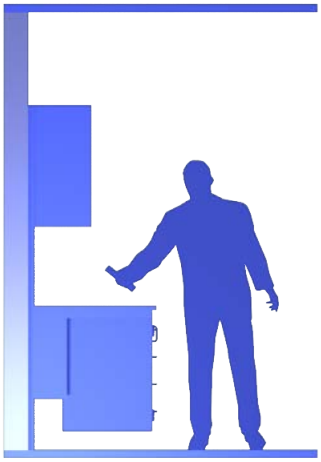

Class 2 – WALL RAIL SUPPORTED

Wall rail casework systems use a wall mounted fixed horizontal and/or vertical support rail from which the cabinetry is hung. The rail can be positioned to support under counter base units, above counter wall cases, shelving, or other ancillary items. The worksurface is typically mounted to the under counter base units, although independently supported worksurfaces can be utilized. Some systems allow for hanging the casework and worksurface at varying heights.

Adaptability Features:

- Wall rail supported systems typically allow for some degree of base cabinet relocation along the length of the rail system. The structural requirements of the worksurface may limit this feature, as the worksurface commonly uses the base cabinets for support.
- Bench relocation is possible by dismantling the rail system from the wall and reassembling in another area. New components are not necessarily required.
- Worksurface height adjustments can be accomplished within a limited range with some designs.
- Wall cases or shelving can be fixed or adjustable depending on design.
- Utilities are typically mounted directly to the worksurfaces or casework. Wall rail supported systems may require horizontal utility runs to be placed within the wall.

©SEFA 5th Edition Desk Reference - Version 3.0

5.2 CLASS 2 – WALL RAIL SUPPORTED

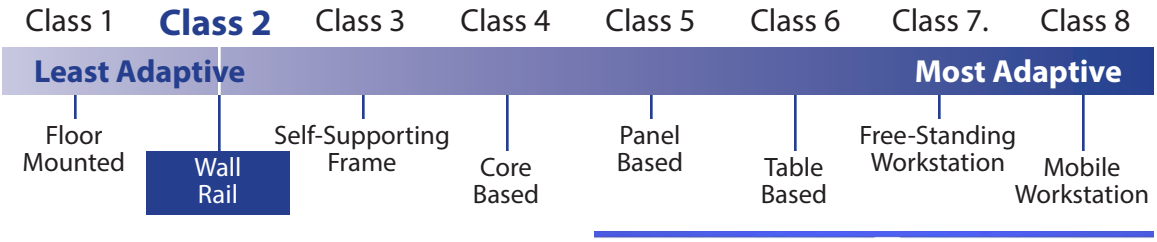

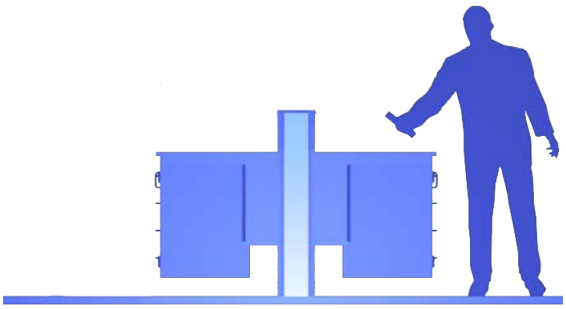

Functionality Features:

- Wall rail supported systems, like many adaptable systems that utilize suspended casework, create areas behind and between cabinet and structural elements that can be difficult to access and clean. Worksurfaces can be sealed in continuous lengths, but this can limit casework adjustability.
- Storage volume is good, but restricted to base cabinet size restrictions common to all suspended casework systems.
- Strength, stability and vibration isolation are related to the design and components of the individual system and the anchorage to the wall.

Class 2 – ADAPTABILITY RATING CHART *

Action	Class 2
Relocate a Cabinet	3 – 3
Relocate a Bench	1 – 3
Adjust a Worksurface	3 – 4
Add a Shelf	2 – 4
Adjust a Shelf	3 – 4
Relocate a Utility	1 – 1
Adaptability Range	**13 – 19**

Class 2 – FUNCTIONALITY RATING CHART **

Action	Class 2
Cleanability	1 – 3
Storage Volume	1 – 3
Strength – Overall	2 – 3
Strength – Worksurface	1 – 4
Stability – Tipping	0 – 1
Functionality Range	**5 – 14**

*** See Appendix A**
**** See Appendix B**

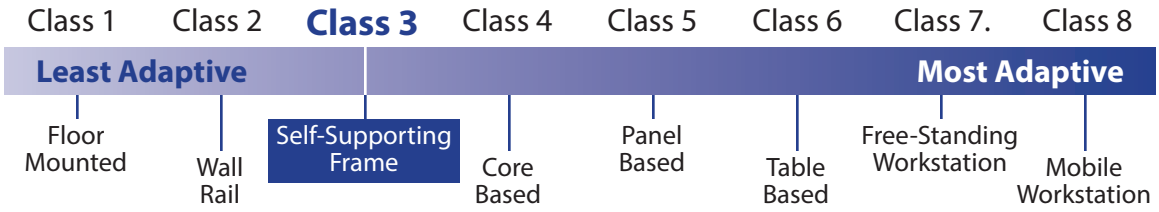

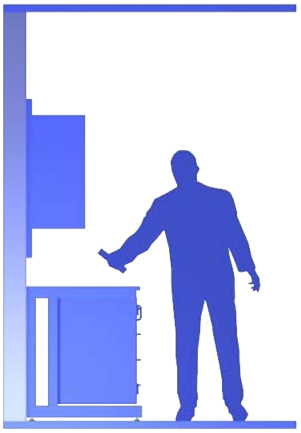

Class 3 – SELF-SUPPORTING FRAME

Self Supporting Frame casework systems utilize a floor supported cantilevered support frame (C-Frame). Some systems are fully cantilevered; some utilize a front leg for added strength and stability. The frame can be worksurface height or also include above counter framing. Base cabinets, upper cabinets, worksurfaces, shelving, service utility distribution, and ancillary items can be suspended from the frame structure. Typically, the frame utilizes a support leg structure connected by horizontally run support members. The frame can be constructed to provide a chase for horizontally run services beneath the worksurface and behind the base cabinets. Typically, the worksurfaces are supported independently of the cabinets, allowing for cabinet relocation horizontally within the structure. Some systems are designed with height adjustable support legs. Self supporting frame systems can also be used in conjunction with mobile or floor mounted casework.

Adaptability Features:

- Self supporting frame systems typically allow for fairly simple cabinet relocation along the horizontal frame.
- Bench relocation is only possible by dismantling or disconnecting the frame system from the wall and/or floor and reassembling in another area. New components are not necessarily required.
- Worksurface height adjustment is not possible with most self supporting frame designs. The systems that offer worksurface height adjustment typically use a telescoping frame design for the vertical members. Height adjustment requires removal of the suspended casework and worksurfaces, adjusting the vertical members, then reattaching the suspended units and worksurfaces.
- Wall cases or shelving can be wall mounted, or mounted to above worksurface framework that is part of the self supporting frame structure. Shelf adjustability depends on the system design.
- Utilities are typically mounted directly to the worksurface, with horizontal utility lines attached to the system framework.

©SEFA 5th Edition Desk Reference - Version 3.0

5.3 CLASS 3 – SELF-SUPPORTING FRAME

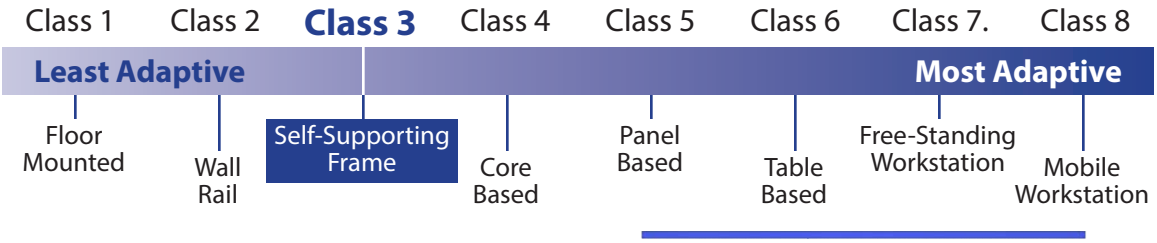

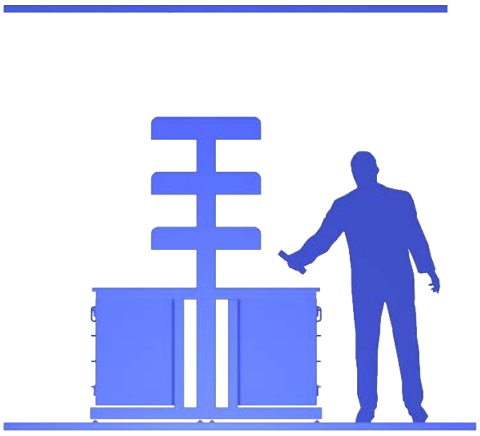

Functionality Features:

- Self-supporting frame systems, like many adaptable systems that utilize suspended casework, create areas behind and between cabinet and structural elements that can be difficult to access and clean. Worksurfaces can be sealed in continuous lengths, but this can limit casework adjustability.
- Storage volume is good, but restricted to base cabinet size restrictions common to all suspended casework systems.
- Strength, stability and vibration isolation are related to the design and components of the individual system and anchorage to the wall.

Class 3 – ADAPTABILITY RATING CHART *

Action	Class 3
Relocate a Cabinet	2 – 4
Relocate a Bench	2 – 3
Adjust a Worksurface	2 – 3
Add a Shelf	4 – 4
Adjust a Shelf	4 – 4
Relocate a Utility	1 – 1
Adaptability Range	**15 – 19**

Class 3 – FUNCTIONALITY RATING CHART **

Action	Class 3
Cleanability	1 – 3
Storage Volume	1 – 3
Strength – Overall	2 – 4
Strength – Worksurface	1 – 4
Stability – Tipping	0 – 1
Functionality Range	**5 – 15**

*** See Appendix A**
**** See Appendix B**

CLASS 4 – CORE BASED

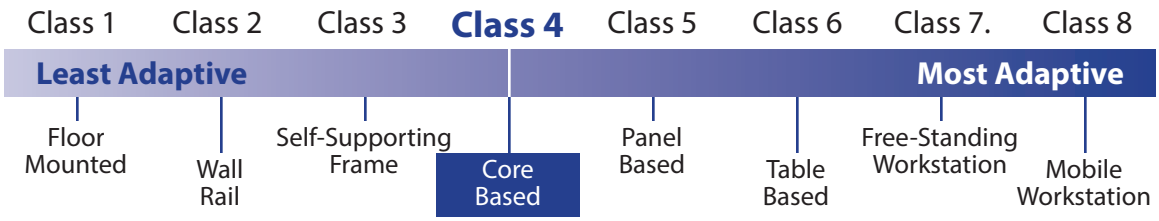

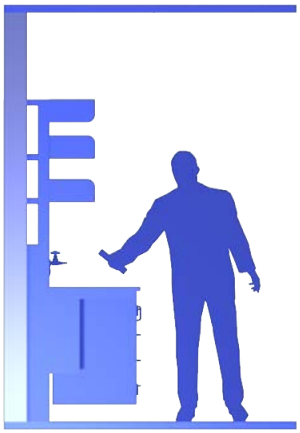

Class 4 – CORE BASED

Core based casework systems utilize a floor mounted support module (core) from which table frames, upper cabinets, shelving, service utility distribution, and ancillary items are suspended. The core module is typically anchored to the floor and/or adjacent walls or structural members, to provide a self-supporting structure for all system components. Core modules can be worksurface height or also include an above counter structure. The core modules provide a chase for horizontally and vertically run services. The core modules can be provided with enclosure panels or be open. Base cabinets can be floor mounted or mobile in front of the support module, or suspended from table frames supported by the core module. Typically, individual core modules are provided in varying lengths and are combined to create full length assemblies. Table frames with work surfaces, and shelving are suspended from the core modules. Typically the Core module incorporates adjustment slots for vertical height adjustability of worksurfaces, shelving and ancillary items.

Adaptability Features:

- Core based casework systems typically provide for simple cabinet relocation when suspended or mobile cabinetry is used.
- Bench relocation is only possible by dismantling and disconnecting the core system from the wall and/or floor and reassembling in another area. New components are not necessarily required.
- Worksurface height adjustment is accomplished on most of these systems by individual support frames hung from the cores with a height adjustable slot design. Suspended cabinets are first removed, and then the worksurface and its frame are lifted (often with a mechanical lift device) and placed in a new position on the core.
- Wall cases or shelving can be wall mounted, or mounted to above worksurface framework that is part of the core structure. Shelf adjustability depends on the system, but is typically a simple slot design.
- Utilities are typically mounted directly to the cores, with horizontal utility lines attached within the core system framework.

©SEFA 5th Edition Desk Reference - Version 3.0

5.4 CLASS 4 – CORE BASED

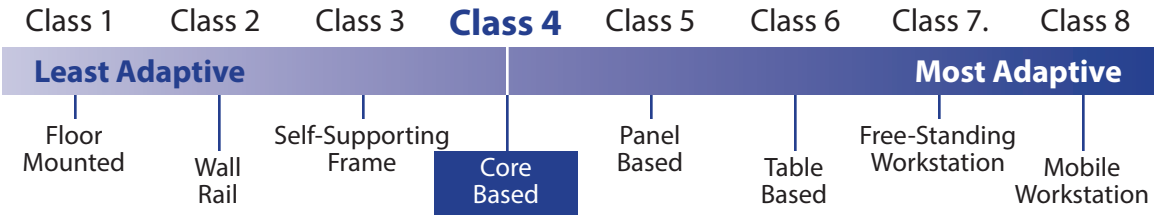

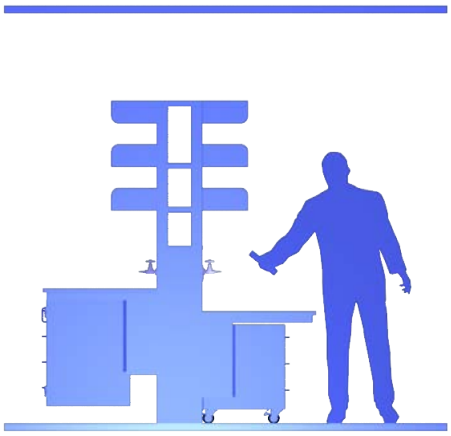

Functionality Features:

- Core based systems, like many adaptable systems that utilize suspended casework, create areas behind and between cabinets and structural elements that can be difficult to access and clean. Worksurfaces are typically not sealed in continuous lengths, as this interferes with worksurface height adjustment. Soft caulk is sometimes used for joints when a liquid seal is important.
- Storage volume is good, but restricted to base cabinet size restrictions common to all suspended casework systems.
- Strength, stability and vibration isolation are related to the design and components of the individual system, and the anchorage to the wall and/or floor.

Class 4 – ADAPTABILITY RATING CHART *

Action	Class 4
Relocate a Cabinet	2 – 4
Relocate a Bench	2 – 3
Adjust a Worksurface	2 – 4
Add a Shelf	4 – 4
Adjust a Shelf	4 – 4
Relocate a Utility	1 – 1
Adaptability Range	**15 – 20**

Class 4 – FUNCTIONALITY RATING CHART **

Action	Class 4
Cleanability	1 – 3
Storage Volume	1 – 3
Strength – Overall	3 – 4
Strength – Worksurface	1 – 4
Stability – Tipping	0 – 1
Functionality Range	**6 – 15**

*** See Appendix A**
**** See Appendix B**

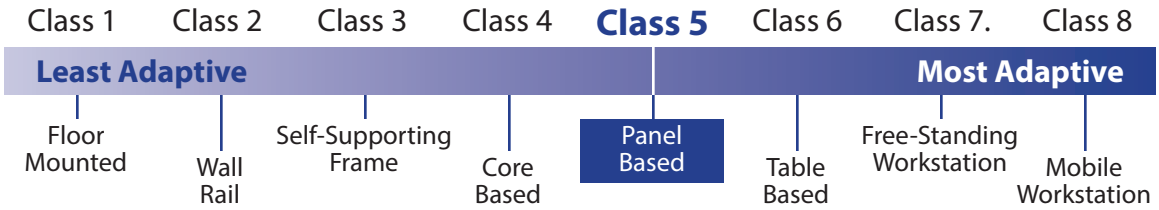

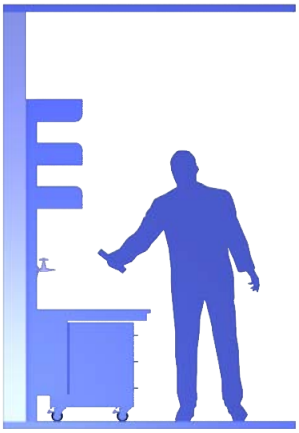

Class 5 – PANEL BASED

Panel based systems are similar to Core based systems (see Class 4) except they utilize a narrow support module, typically 6" or less. This narrow panel design limits the available space for service utility distribution. These panel assemblies are sometimes used as wall partitions, and can include features such as glass inserts, doors, and other features associated with internal wall partitions. These systems can require attachment to overhead structures in addition to floor and/or wall anchoring.

Adaptability Features:

- Panel based casework systems typically provide for simple cabinet relocation when suspended or mobile cabinetry is used.
- Bench relocation is only possible by dismantling and disconnecting the panel system from the wall, floor and/or ceiling, then reassembling in another area. New components are not necessarily required.
- Worksurface height adjustment is accomplished on most of these systems by individual support frames hung from the panel with a height adjustable slot design. Suspended cabinets are first removed, and then the worksurface and its frame are lifted (often with a mechanical lift device) and placed in a new position on the panel.
- Wall cases or shelving can be wall mounted, or mounted to above worksurface framework that is part of the panel structure. Shelf adjustability depends on the system, but is typically a simple slot design.
- Utilities are typically mounted directly to the panels, with horizontal utility lines attached within the panel system framework.

©SEFA 5th Edition Desk Reference - Version 3.0

5.5 CLASS 5 – PANEL BASED

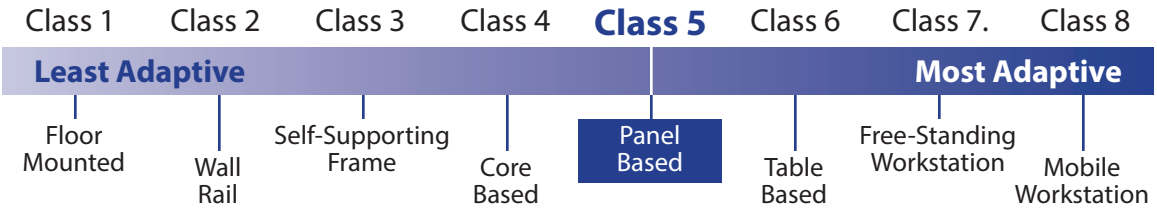

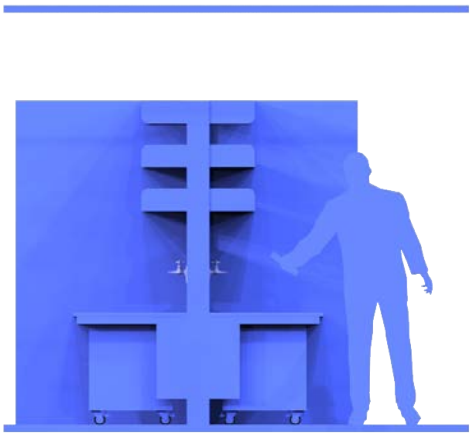

Functionality Features:

- Panel based systems, like many adaptable systems that utilize suspended casework, create areas behind and between cabinets and structural elements that can be difficult to access and clean. Worksurfaces are typically not sealed in continuous lengths, as this interferes with worksurface height adjustment. Soft caulk is sometimes used for joints when a liquid seal is important.
- Storage volume is good, but restricted to base cabinet size restrictions common to all suspended or mobile casework systems.
- Strength, stability and vibration isolation are related to the design and components of the individual system, and the anchorage to the wall and/or floor.

Class 5 – ADAPTABILITY RATING CHART *

Action	Class 5
Relocate a Cabinet	2 – 4
Relocate a Bench	2 – 3
Adjust a Worksurface	3 – 4
Add a Shelf	4 – 4
Adjust a Shelf	4 – 4
Relocate a Utility	1 – 1
Adaptability Range	**16 – 20**

Class 5 – FUNCTIONALITY RATING CHART **

Action	Class 5
Cleanability	1 – 3
Storage Volume	1 – 3
Strength – Overall	2 – 4
Strength – Worksurface	1 – 4
Stability – Tipping	0 – 1
Functionality Range	**5 – 15**

*** See Appendix A**
**** See Appendix B**

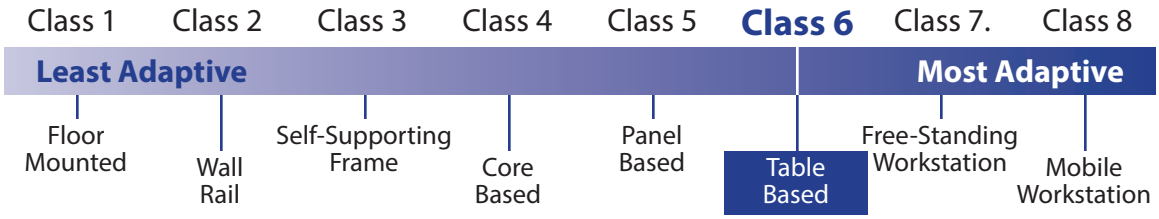

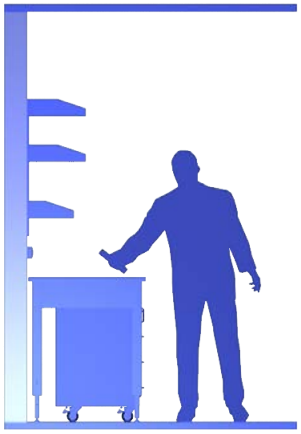

Class 6 – TABLE BASED

Table based systems use independent floor mounted self-supporting tables as the key component. They are used in conjunction with separate wall mounted or structural upper storage systems. The tables can be either adjustable or fixed height. The base cabinets can be mobile, floor mounted, or suspended from the tables. For this class, these tables do not have above worksurface structures integrated into the table. Utilities, sinks, and other fixed elements are typically separate from the tables, allowing the tables to be easily relocated.

Adaptability Features:

- Table based systems typically use mobile or suspended base cabinetry allowing for simple relocation of base units. It is more common for these systems to use mobile casework units that are on casters or freestanding.
- Bench relocation is a matter of moving the table to a new location. Suspended cabinets may need to be removed prior to moving.
- Worksurface height adjustment is typically accomplished on these systems by adjusting the table legs. This adjustment can be a telescoping leg design that requires a hardware mechanism for adjustment. Also crank, or power adjustment is available on some systems. Suspended casework units may need to be removed before adjustment.
- Wall cases or shelving can be wall mounted, or mounted to an independent structure. In this classification the table does not include above worksurface support structures.
- Utilities are typically mounted to specialty units such as sink units, utility drops or utility pods that are at locations convenient to the tables.

©SEFA 5th Edition Desk Reference - Version 3.0

5.6 CLASS 6 – TABLE BASED

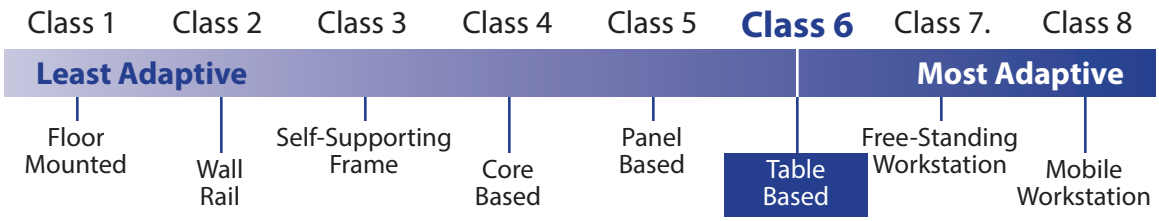

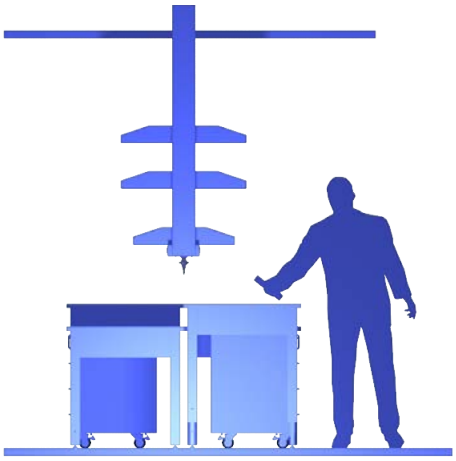

Functionality Features:

- Many adaptable systems that utilize suspended casework, create areas behind and between cabinets and structural elements that can be difficult to access and clean. Table based systems are designed to allow easy relocation of the entire table, allowing greater access to these areas. Worksurfaces are typically not sealed in continuous lengths; they are matched to the individual table.
- Storage volume is restricted to base cabinet size restrictions common to all suspended or mobile casework systems.
- Strength, stability and vibration isolation are related to the design and components of the individual system, and the anchorage to the wall and/or floor.

Class 6 – ADAPTABILITY RATING CHART *

Action	Class 6
Relocate a Cabinet	2 – 4
Relocate a Bench	4 – 4
Adjust a Worksurface	3 – 4
Add a Shelf	4 – 4
Adjust a Shelf	4 – 4
Relocate a Utility	1 – 1
Adaptability Range	**18 – 21**

Class 6 – FUNCTIONALITY RATING CHART **

Action	Class 6
Cleanability	1 – 3
Storage Volume	1 – 3
Strength – Overall	2 – 3
Strength – Worksurface	1 – 4
Stability – Tipping	0 – 1
Functionality Range	**5 – 14**

*** See Appendix A**
**** See Appendix B**

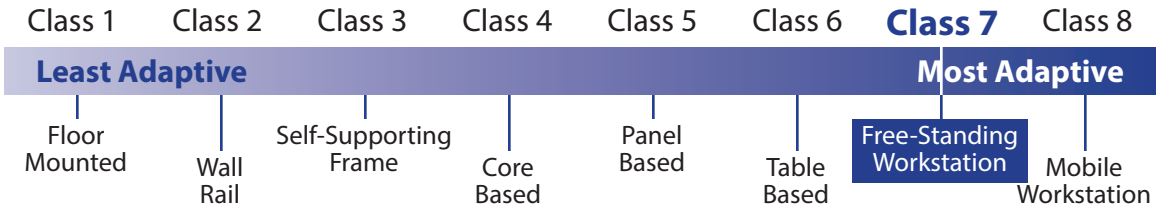

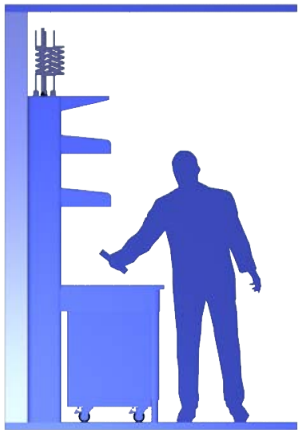

Class 7 – FREE-STANDING WORKSTATION

Free-standing workstations are table based systems utilizing floor mounted tables as the key component. The workstation can be worksurface height or incorporate above counter structure. The workstations can incorporate either adjustable height or fixed height worksurfaces. Base cabinets can be mobile, floor mounted, or suspended. Upper cabinets, worksurfaces, shelving, service utility distribution, and ancillary items can be suspended from the frame structure. Free-standing workstations with above counter structures can be pre-plumbed and prewired, and used in conjunction with ceiling mounted service utility distribution systems. Typically, free-standing workstations incorporate adjustment slots for vertical height adjustability of worksurfaces, shelving and ancillary items. Free-standing workstations are not anchored to the building, allowing for simple relocation.

Adaptability Features:

- Free-standing workstation systems typically use mobile or suspended base cabinetry allowing for simple relocation of base units. It is more common for these systems to use mobile casework units that are on casters or freestanding.
- Bench relocation is a matter of moving the table to a new location. Suspended cabinets may need to be removed prior to moving.
- Worksurface height adjustment is typically accomplished on these systems by adjusting the table legs. This adjustment can be a telescoping leg design that requires a hardware mechanism for adjustment. Also crank, or power adjustment is available on some systems. Suspended casework units may need to be removed before adjustment.
- Wall cases or shelving can be wall mounted, or mounted to a framework structure integrated into the workstation. Typically, a simple slot design allows for shelf adjustment.
- Free-standing workstations can incorporate pre-plumbed and prewired utilities. Often these are provided with cords and hoses to connect to quick connect fittings located in a ceiling panel or overhead service carrier.

©SEFA 5th Edition Desk Reference - Version 3.0

5.7 CLASS 7 – FREE-STANDING WORKSTATION

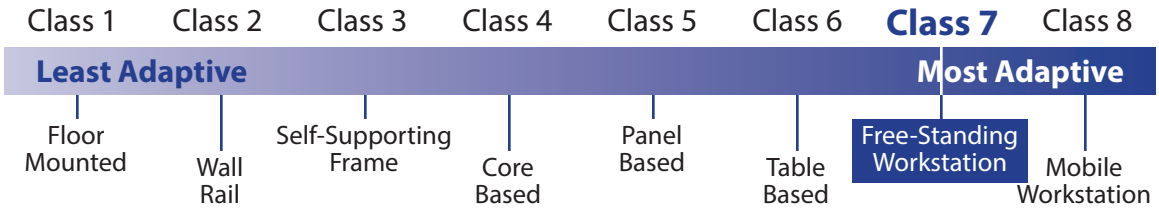

Functionality Features:

- Many adaptable systems that utilize suspended casework, create areas behind and between cabinets and structural elements that can be difficult to access and clean. Free-standing workstation systems are designed to allow easy relocation of the entire bench, allowing greater access to these areas. Worksurfaces are typically not sealed in continuous lengths; they are matched to the individual table.
- Storage volume is restricted to base cabinet size restrictions common to all suspended or mobile casework systems.
- Strength, stability and vibration isolation are related to the design and components of the individual system. These systems are typically not anchored to the building structure.

*** See Appendix A**
**** See Appendix B**

Class 7 – ADAPTABILITY RATING CHART *

Action	Class 7
Relocate a Cabinet	2 – 4
Relocate a Bench	3 – 4
Adjust a Worksurface	3 – 3
Add a Shelf	4 – 4
Adjust a Shelf	4 – 4
Relocate a Utility	3 – 4
Adaptability Range	**19 – 23**

Class 7 – FUNCTIONALITY RATING CHART **

Action	Class 7
Cleanability	2 – 3
Storage Volume	1 – 3
Strength – Overall	2 – 3
Strength – Worksurface	1 – 4
Stability – Tipping	0 – 1
Functionality Range	**6 – 14**

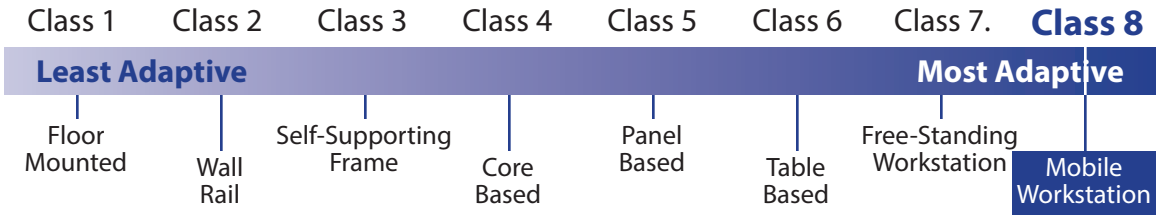

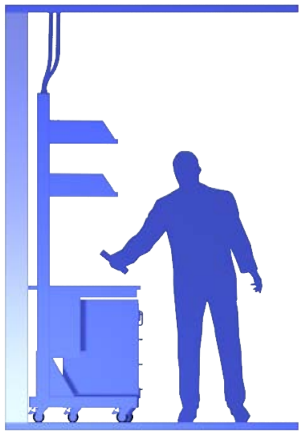

Class 8 – MOBILE WORKSTATION

Mobile Workstations are similar to Free Standing Workstations (see Class 7), but are typically mounted on casters to accommodate simple relocation. The workstation can be worksurface height or incorporate above counter structure. The workstation can incorporate either adjustable height or fixed height worksurfaces. Base cabinets can be mobile, floor mounted, or suspended. Upper cabinets, worksurfaces, shelving, service utility distribution, and ancillary items can be suspended from the frame structure. Mobile Workstations with above counter structures can be pre-plumbed and prewired, and used in conjunction with ceiling mounted service utility distribution systems. Typically, Mobile Workstations incorporate adjustment slots for vertical height adjustability of worksurfaces, shelving and ancillary items.

Adaptability Features:

- Mobile workstation systems typically use mobile or suspended base cabinetry allowing for simple relocation of base units. It is more common for these systems to use mobile casework units that are on casters or freestanding.
- Bench relocation is a matter of moving the table to a new location. Suspended cabinets may need to be removed prior to moving.
- Worksurface height adjustment is typically accomplished on these systems by adjusting the table legs. This adjustment can be a telescoping leg design that requires a hardware mechanism for adjustment. Also crank, or power adjustment is available on some systems. Suspended casework units may need to be removed before adjustment.
- Wall cases or shelving can be wall mounted, or mounted to a framework structure integrated into the workstation. Typically, a simple slot design allows for shelf adjustment.
- Mobile workstations can incorporate pre-plumbed and prewired utilities. Often these are provided with cords and hoses to connect to quick connect fittings located in a ceiling panel or overhead service carrier.

©SEFA 5th Edition Desk Reference - Version 3.0

5.8 CLASS 8 – MOBILE WORKSTATION

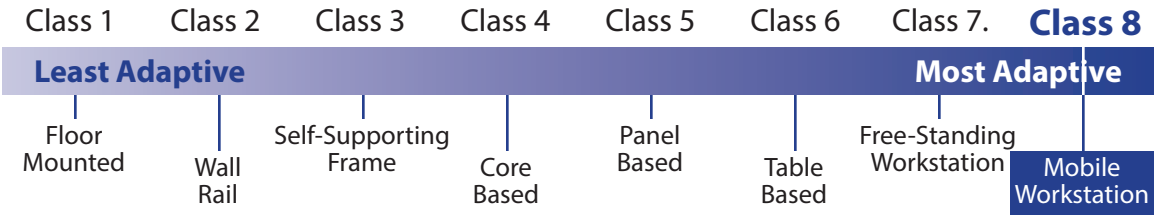

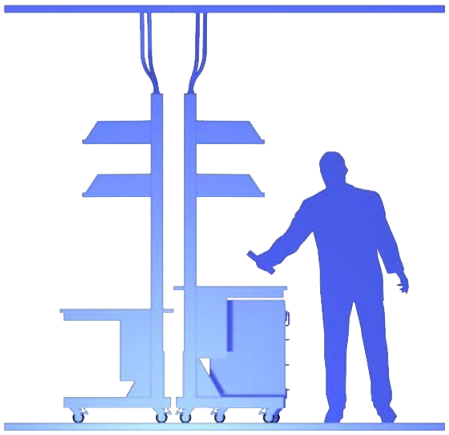

Functionality Features:

- Many adaptable systems that utilize suspended casework, create areas behind and between cabinets and structural elements that can be difficult to access and clean. Mobile workstation systems are designed to allow easy relocation of the entire bench, allowing greater access to these areas. Worksurfaces are typically not sealed in continuous lengths; they are matched to the individual table.
- Storage volume is restricted to base cabinet size restrictions common to all suspended or mobile casework systems.
- Strength, stability and vibration isolation are related to the design and components of the individual system. These systems are typically not anchored to the building structure.

*** See Appendix A**
**** See Appendix B**

Class 8 – ADAPTABILITY RATING CHART *

Action	Class 8
Relocate a Cabinet	3 – 4
Relocate a Bench	4 – 4
Adjust a Worksurface	3 – 4
Add a Shelf	4 – 4
Adjust a Shelf	4 – 4
Relocate a Utility	3 – 4
Adaptability Range	**21 – 24**

Class 8 – FUNCTIONALITY RATING CHART **

Action	Class 8
Cleanability	1 – 3
Storage Volume	1 – 3
Strength – Overall	2 – 4
Strength – Worksurface	1 – 4
Stability – Tipping	0 – 1
Functionality Range	**5 – 15**

6.0 Test Criteria

6.1 Purpose

Many of the components used in adaptable casework shall be tested in conformance to the appropriate section within SEFA – 8. Shelves, drawers, doors, tables, coatings and component hardware are all specified for laboratory grade performance within that standard. Performance criteria specific to Adaptable Furniture relate to strength and stability. The purpose of this standard is to identify the minimal acceptable physical strength of adaptable furniture. This is not intended to replicate or in any way distract from proper engineering analysis for seismic conditions. Refer to the International Building Code, IBC - 2000 for the proper performance testing under seismic conditions.

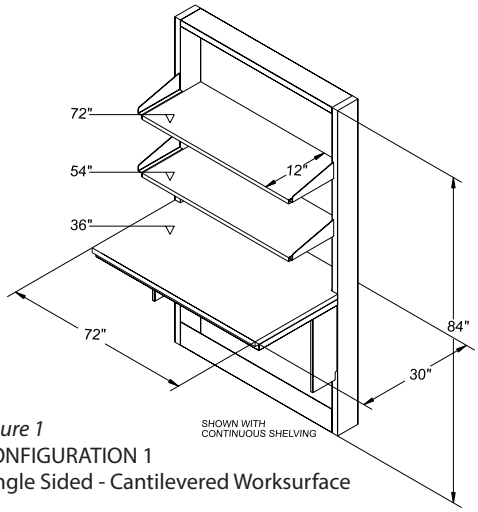

figure 1
CONFIGURATION 1
Single Sided - Cantilevered Worksurface

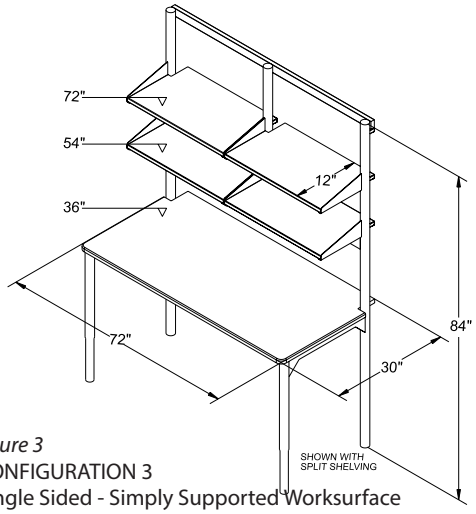

figure 3
CONFIGURATION 3
Single Sided - Simply Supported Worksurface

6.2 Description of Test Unit

Four configurations have been identified to represent the majority of laboratory grade adaptable furniture. Although designs vary from manufacturer to manufacturer, the basic configuration can be represented by one of four configurations. For test purposes, all systems shall have a worksurface and two rows of shelving mounted in the location and to the size shown on the figures below.

1. single sided, cantilevered worksurface
2. double sided, cantilevered worksurface
3. single sided, simply supported worksurface
4. double sided, simply supported worksurface

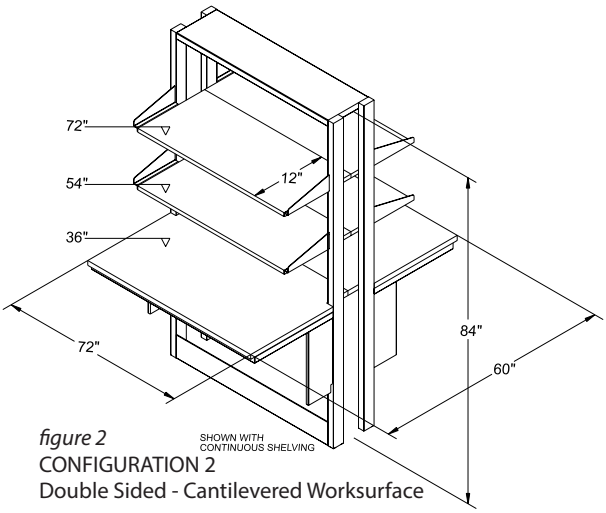

figure 2
CONFIGURATION 2
Double Sided - Cantilevered Worksurface

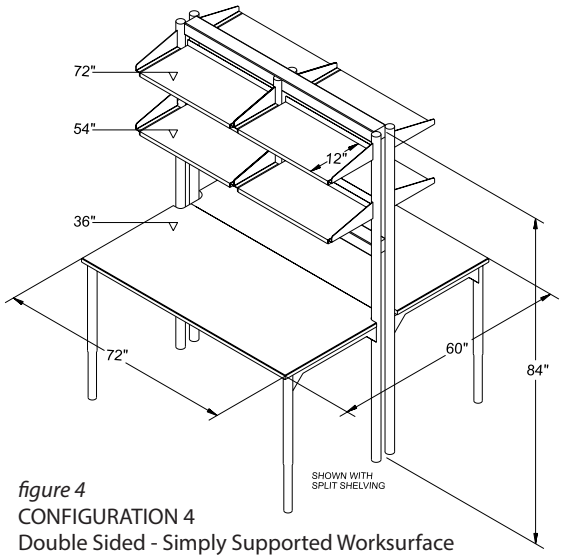

figure 4
CONFIGURATION 4
Double Sided - Simply Supported Worksurface

©SEFA 5th Edition Desk Reference - Version 3.0

The manufacturer shall provide a test unit to the design and construction details (including weldments and material choices) that properly represents their individual product family. The product shall have a continuous or a split shelf consistent with their product family. If both continuous shelving and split shelving is offered, the split shelf shall be chosen for testing (Testing agency shall provide a photograph of the assembly and record if shelves tested were continuous or split on the test certificate).

The unit shall be installed and anchored (if appropriate) as specified by the manufacturer. All anchor details will also be recorded and reported on test certificates.

Great care must be exercised when conducting these tests. SEFA assumes no liability for damage or injury as a result of conducting these tests. Before proceeding assure that you are in compliance with national, state, and regional safety regulations. These tests shall be conducted only by properly trained personnel. All safety precautions shall be taken to insure the safety of testing personnel. These tests require very heavy loads and may result in catastrophic failure that could result in damage or injury to unprepared or untrained personnel.

6.3 Live Load

6.3.1 Each Shelf

Shelf live load shall be equal to 40 lbs per square foot not to exceed 200 pounds. (example: A 6 square foot shelf calculates to 240 pounds so a load of 200 pounds shall be applied on a continuous shelf; or 120 pounds on each split shelf) All shelving load shall be applied by using ten pound sand or shot bags as specified in SEFA-8. Shelf material shall be specified by the manufacturer, installed per manufacturer's specification and reported by the testing agency on the test certificate.

6.3.2 Worksurface

There are four categories of laboratory grade worksurface loads to adaptable furniture. The manufacturer shall specify which category is to be tested and the testing agency shall report the category on the test certificate. All worksurface loads shall be uniformly distributed over the entire worksurface by using fifty pound solid steel bars as specified in SEFA-8. Worksurface material shall be specified by the manufacturer, installed per manufacturer's specification and reported by the testing agency on the test certificate.

Category 1 = 200 pounds
Category 2 = 600 pounds
Category 3 = 1000 pounds
Category 4 = 1200 pounds

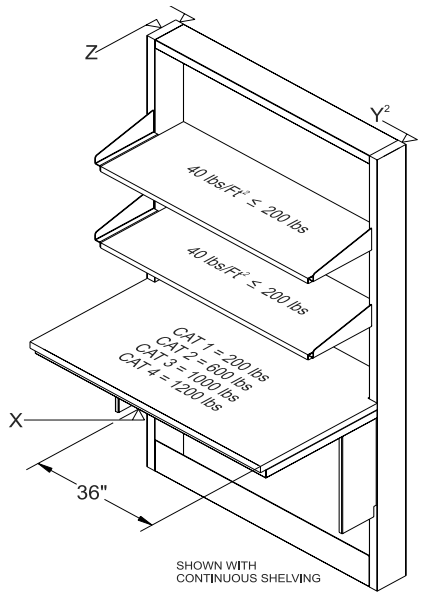

figure 5
CONFIGURATION 1 -Single Sided - Cantilevered

6.4 Strength Test Configuration 1 (Single Sided, Cantilevered)

Refer to Figure 5

6.4.1 Test Procedure

Measure the worksurface to find the center point (approximately at 36") and mark it for reference. Establish a zero vertical deflection point. From this point will be determined X coordinate movement.

Establish a zero deflection point at the upper most height and on each end of the assembly. From this point will be determined Y and Z coordinate movement.

Load the shelves with ten-pound sand or shot bags until each shelf is loaded with 40 lbs per sq ft not to exceed 200 pounds.

Record deflection at X, Y^1, Y^2 and Z.

6.4.2 Acceptance Criteria

Allowable maximum deflection
X = 0.125 inches
Y avg $(Y^1 + Y^2)/2$ = 0.125 inches
Z = 0.125 inches

6.4.3 Test Procedure Continued

With shelves fully loaded add the worksurface live load using fifty pound steel bars to the specified load category for worksurfaces.

Record deflection at X, Y^1, Y^2 and Z.

6.4.4 Acceptance Criteria

Allowable maximum deflection
X = 0.250 inches
Yavg $(Y^1 + Y^2)/2$ = 0.125 inches
Z = 0.125 inches

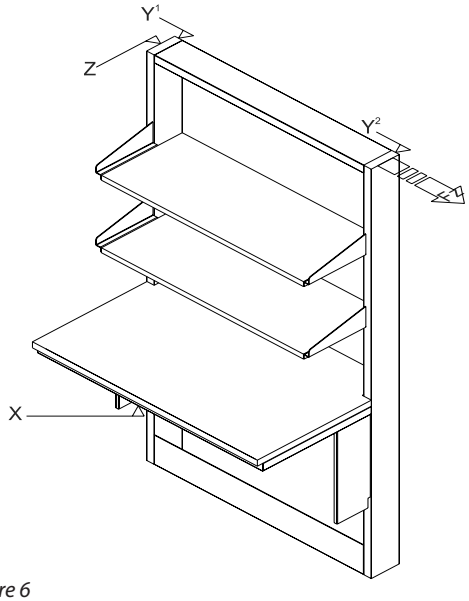

figure 6
CONFIGURATION 1 Single Sided - Cantilevered - Anchored Units

6.5 Stability Test Config. 1 (Single Sided, Cantilevered) -Anchored Units

Refer to Fig 6

6.5.1 Test Procedure Anchored Units

At the upper most point of the assembly apply a force at Fz equal to two percent of the systems fully loaded maximum.

Record deflection at X and Z.

6.5.2 Acceptance Criteria

Allowable maximum deflection
X = 0.060 inches
Z = 0.500 inches

6.6 Resistance to Overturning Config. 2 (Single Sided, Cantilevered) - Free Standing Units

6.6.1 Test Procedure Free Standing Units

Block the unit at front or rear bottom edge to prevent lateral movement. Tilt the unit 10 degrees from horizontal in the direction most likely to overturn.

6.6.2 Acceptance Criteria

A pass is when the unit does not initiate overturn when tilted 10 degrees from horizontal in the direction most likely to cause overturn and when no parts become disengaged from unit.

6.7 Strength Test Configuration 2 (Double Sided, Cantilevered)

Refer to Fig 7

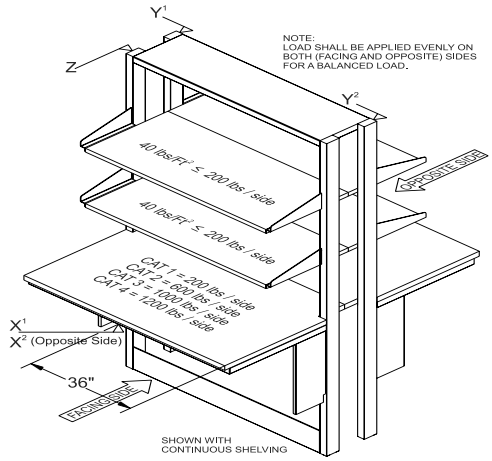

figure7
CONFIGURATION 2
Double Sided - Cantilevered

©SEFA 5th Edition Desk Reference - Version 3.0

6.7.1 Test Procedure

Measure the worksurface to find the center point (approximately at 36") and mark it for reference. Establish a zero vertical deflection point. From this point will be determined X coordinate movement. Establish an X coordinate on the opposite side equal to the location on facing side.

Establish a zero deflection point at the upper most height and on each end of the assembly. From this point will be determined Y and Z coordinate movement.

Load the shelves with ten-pound sand or shot bags until each shelf is loaded with 40 lbs per sq ft not to exceed 200 pounds. Load shall be applied evenly on both (facing side and opposite) sides for a balanced load

Record deflection at X^1, X^2, Y^1, Y^2 and Z.

6.7.2 Acceptance Criteria

Allowable maximum deflection
X^1, X^2 = 0.125 inches
Yavg $(Y^1 + Y^2)/2$ = 0.125 inches
Z = 0.125 inches

6.7.3 Test Procedure Continued

With shelves fully loaded add the worksurface live load using fifty pound steel bars to the specified load category for worksurfaces. Load shall be applied evenly on both (facing side and opposite) sides for a balanced load.

Record deflection at X^1,X^2, Y^1, Y^2 and Z.

6.7.4 Acceptance Criteria

Allowable maximum deflection
X^1, X^2 = 0.250 inches
Yavg $(Y^1 + Y^2)/2$ = 0.125 inches
Z = 0.125 inches

6.8 Stability Test Config. 2 (Double Sided, Cantilevered) – Anchored Units

Refer to Fig 8

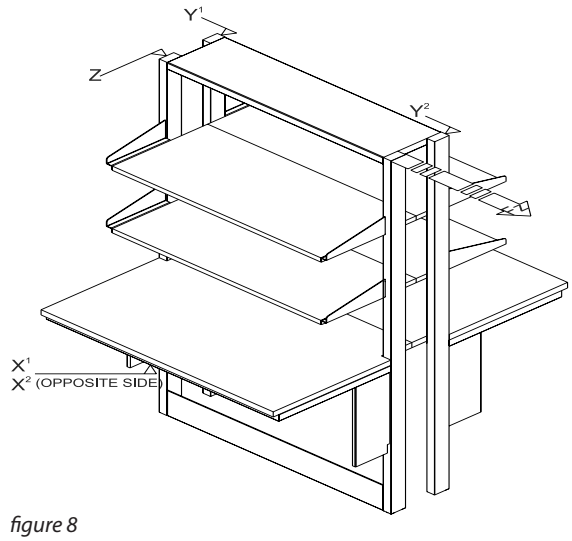

figure 8
CONFIGURATION 2
Double Sided - Cantilevered - Anchored Units

6.8.1 Test Procedure Anchored Units

At the upper most point of the assembly apply a force at Fz equal to two percent of the systems fully loaded maximum.

Record deflection at X1, X2, and Z.

6.8.2 Acceptance Criteria

Allowable maximum deflection
X^1, X^2 = 0.063 inches
Z = 0.500 inches

6.9 [i]Resistance to Overturning Configuration 2 (Double Sided, Cantilevered) Free Standing Units

6.9.1 Test Procedure Free Standing Units

Block the unit at front or rear bottom edge to prevent lateral movement. Tilt the unit 10 degrees from horizontal in the direction most likely to overturn.

6.9.2 Acceptance Criteria

A pass is when the unit does not initiate overturn when tilted 10 degrees from horizontal in the direction most likely to cause overturn and when no parts become disengaged from unit.

6.10 Strength Test Configuration 3 (Single Sided, Supported)

Refer to Figure 9

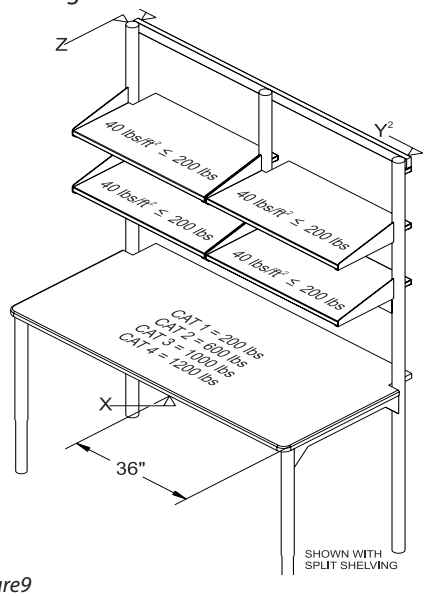

figure9
CONFIGURATION 3
Single Sided - Supported

6.10.1 Test Procedure

Measure the worksurface to find the center point (approximately at 36") and mark it for reference. Establish a zero vertical deflection point. From this point will be determined X coordinate movement.

Establish a zero deflection point at the upper most height and on each end of the assembly. From this point will be determined Y and Z coordinate movement.

Load the shelves with ten-pound sand or shot bags until each shelf is loaded with 40 lbs per sq ft not to exceed 200 pounds.

Record deflection at X, Y^1, Y^2 and Z.

6.10.2 Acceptance Criteria

Allowable maximum deflection

X = 0.125 inches

Yavg $(Y^1 + Y^2)/2$ = 0.125 inches

Z = 0.125 inches

6.10.3 Test Procedure Continued

With shelves fully loaded add the worksurface live load using fifty pound steel bars to the specified load category for worksurfaces.

Record deflection at X, Y^1, Y^2 and Z.

6.10.4 Acceptance Criteria

Allowable maximum deflection

X = 0.250 inches

Yavg $(Y^1 + Y^2)/2$ = 0.125 inches

Z = 0.125 inches

6.11 Stability Test Configuration 3 (Single Sided, Supported) -Anchored Units

Refer to Fig 10

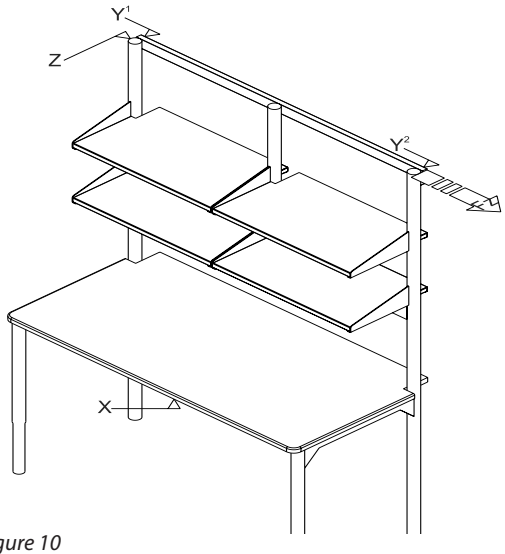

figure 10
CONFIGURATION 3
Single Sided - Supported - Anchored Units

6.11.1 Test Procedure Anchored Units

At the upper most point of the assembly apply a force at Fz equal to two percent of the systems fully loaded maximum.

Record deflection at X and Z.

©SEFA 5th Edition Desk Reference - Version 3.0

6.11.2 Acceptance Criteria

Allowable maximum deflection
X = 0.063 inches
Z = 0.500 inches

6.12 [i]Resistance to Overturning Config. 3 (Single Sided, Supported) Free Standing Units

6.12.1 Test Procedure Free Standing Units

Block the unit at front or rear bottom edge to prevent lateral movement. Tilt the unit 10 degrees from horizontal in the direction most likely to overturn.

6.12.2 Acceptance Criteria

A pass is when the unit does not initiate overturn when tilted 10 degrees from horizontal in the direction most likely to cause overturn and when no parts become disengaged from unit.

6.13 Strength Test Configuration 4 (Double Sided, Supported)

Refer to Fig 11

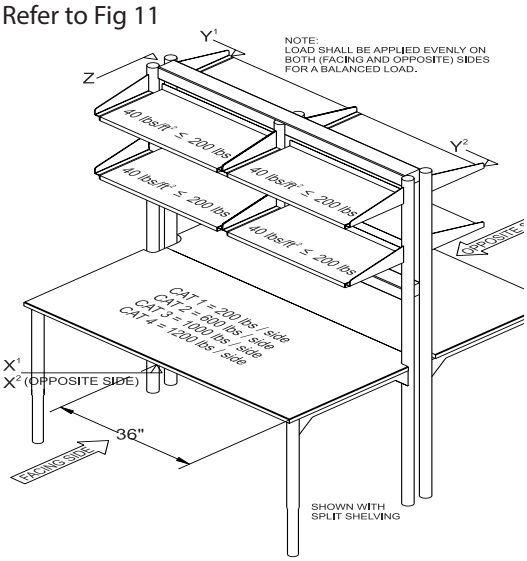

figure 11
CONFIGURATION 4
Double Sided - Supported

6.13.1 Test Procedure

Measure the worksurface to find the center point (approximately at 36") and mark it for reference. Establish a zero vertical deflection point. From this point will be determined X coordinate movement. Establish an X coordinate on the opposite side equal to the location on facing side.

Establish a zero deflection point at the upper most height and on each end of the assembly. From this point will be determined Y and Z coordinate movement.

Load the shelves with ten-pound sand or shot bags until each shelf is loaded with 40 lbs per sq ft not to exceed 200 pounds. Load shall be applied evenly on both (facing side and opposite) sides for a balanced load

Record deflection at X^1, X^2, Y^1, Y^2 and Z.

6.13.2 Acceptance Criteria

Allowable maximum deflection
X^1, X^2 = 0.125 inches
Yavg $(Y^1 + Y^2)/2$ = 0.125 inches
Z = 0.125 inches

With shelves fully loaded add the worksurface live load using fifty pound steel bars to the specified load category for worksurfaces. Load shall be applied evenly on both (facing side and opposite) sides for a balanced load.

Record deflection at X^1, X^2, Y^1, Y^2 and Z.

Allowable maximum deflection
X^1, X^2 = 0.250 inches
Yavg $(Y^1 + Y^2)/2$ = 0.125 inches
Z = 0.125 inches

6.14 Stability Test Configuration 4 (Double Sided, Supported) – Anchored Units

Refer to Fig 12

6.14.1 Test Procedure

At the upper most point of the assembly apply a force at Fz equal to two percent of the systems

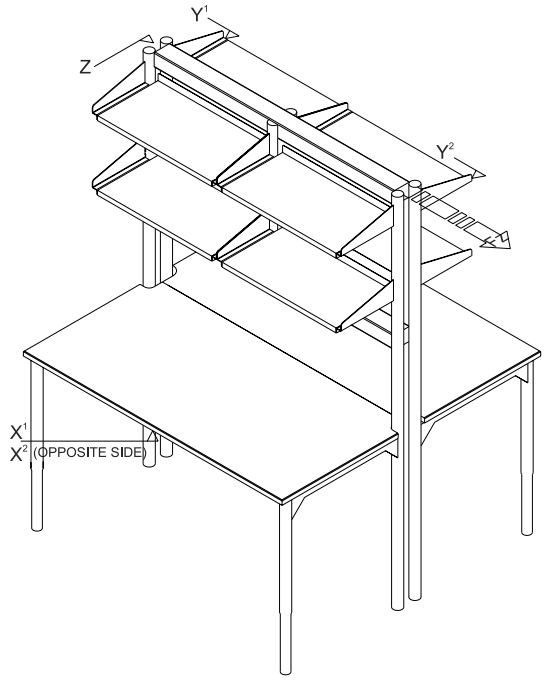

figure 12
CONFIGURATION 4
Double Sided - Supported Anchored Units

fully loaded maximum.

Record deflection at X^1, X^2, and Z.

6.14.2 Acceptance Criteria

Allowable maximum deflection
X^1, X^2 = 0.063 inches
Z = 0.500 inches

6.15 [i]Resistance to Overturning Configuration 4 (Double Sided, Supported) Free Standing Units

6.15.1 Test Procedure Free Standing Units

Block the unit at front or rear bottom edge to prevent lateral movement. Tilt the unit 10 degrees from horizontal in the direction most likely to overturn.

6.15.2 Acceptance Criteria

A pass is when the unit does not initiate overturn when tilted 10 degrees from horizontal in the direction most likely to cause overturn and when no parts become disengaged from unit.

7.0 Product Testing

7.1 Forms

Configuration 1
Single Sided – Cantilevered

Configuration 2
Double Sided – Cantilevered

Configuration 3
Single Sided – Simply Supported

Configuration 4
Double Sided – Simply Supported

[i] Adapted from NSF/ANSI 49-2010

©SEFA 5th Edition Desk Reference - Version 3.0

SEFA 10 - 2013
Test Report
Adaptable System

Class _____ per section 5.1-5.8

Configuration 1
Single Sided – Cantilevered

Load Category _____ per 6.3.2

Anchor Details:

_____
_____
_____
_____
_____
_____
_____
_____

Shelving:

Shelf is: ☐ Continuous ☐ Split

Shelf Material _____

Shelf size:

[ ] ft x [ ] ft = [ ] sq.ft.

x 40 lb = [ ] each
Shelf live load

Continuous Shelves x 2 = [ ] lbs
Total shelf load

or

Split Shelves x 4 = [ ] lbs
Total shelf load

Work surface:

Work Surface Load Category:				
CAT 1	CAT 2	CAT 3	CAT 4	Other
200 lb	600 lb	1000 lb	1200 lb	

Table 1

Work surface load [ ]

\+ Total shelf load [ ]

Fully loaded maximum [ ]

x 0.02 [ ]

Fz Applied Load

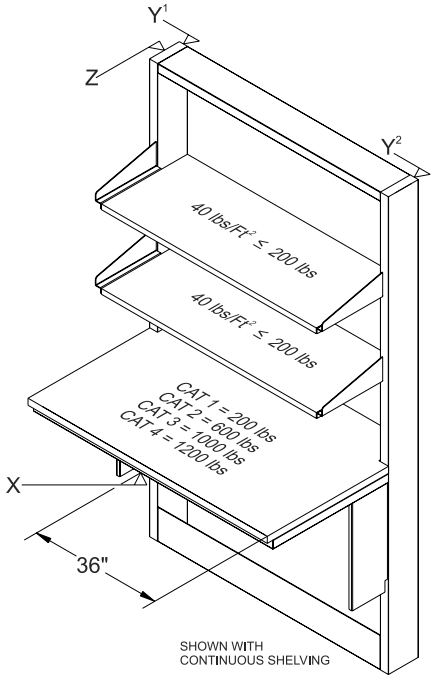

6.4 Strength Test Configuration 1 (Single Sided, Cantilevered)

6.4.2

X	☐ Pass	☐ Fail
Yavg	☐ Pass	☐ Fail
Z	☐ Pass	☐ Fail

6.4.4

X	☐ Pass	☐ Fail
Yavg	☐ Pass	☐ Fail
Z	☐ Pass	☐ Fail

6.5 Stability Test Configuration 1 (Single Sided, Cantilevered) Anchored Units

6.5.2

X	☐ Pass	☐ Fail
Z	☐ Pass	☐ Fail

6.6 Resistance to Overturn
Configuration 1 (Single Sided, Cantilevered)
Free Standing Units

6.6.2

☐ Pass ☐ Fail

SEFA 10 - 2013
Test Report
Adaptable System

Class _____ per section 5.1-5.8

Configuration 2
Double Sided – Cantilevered

Load Category _____ per 6.3.2

Anchor Details:

_____
_____
_____
_____
_____
_____
_____
_____

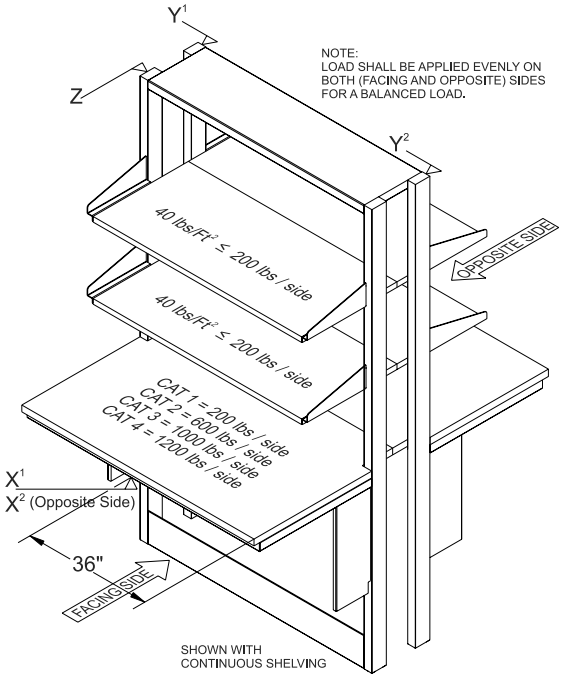

Shelving:

Shelf is: ☐ Continuous ☐ Split

Shelf Material _____

Shelf size:

[ ] ft x [ ] ft = [ ] sq.ft.

x 40 lb = [ ] each
Shelf live load

Continuous Shelves x 4 = [ ] lbs
or **Total shelf load**

Split Shelves x 8 = [ ] lbs
Total shelf load

Work surface:

Work Surface Load Category:				
CAT 1	CAT 2	CAT 3	CAT 4	Other
400 lb	1200 lb	2000 lb	2400 lb	

Table 1

Work surface load [ ]
\+ Total shelf load [ ]
Fully loaded maximum [ ]
x 0.02 [ ]
Fz Applied Load

6.7 Strength Test Configuration 2 (Double Sided, Cantilevered)
6.7.2

X	☐ Pass	☐ Fail
Yavg	☐ Pass	☐ Fail
Z	☐ Pass	☐ Fail

6.7.4

X	☐ Pass	☐ Fail
Yavg	☐ Pass	☐ Fail
Z	☐ Pass	☐ Fail

6.8 Stability Test Configuration 2 (Double Sided, Cantilevered) Anchored Units
6.8.2

X	☐ Pass	☐ Fail
Z	☐ Pass	☐ Fail

6.9 Resistance to Overturn Configuration 2 (Double Sided, Cantilevered) Free Standing Units
6.9.2

☐ Pass ☐ Fail

©SEFA 5th Edition Desk Reference - Version 3.0

SEFA 10 - 2013
Test Report
Adaptable System

Class _____ per section 5.1-5.8

Configuration 3
Single Sided – Simply Supported

Load Category _____ per 6.3.2

Anchor Details:

_____
_____
_____
_____
_____
_____
_____
_____

Shelving:

Shelf is: ☐ Continuous ☐ Split

Shelf Material _____

Shelf size:

[ ] ft x [ ] ft = [ ] sq.ft.

x 40 lb = [ ] each
Shelf live load

Continuous Shelves x 2 = [ ] lbs
Total shelf load

or

Split Shelves x 4 = [ ] lbs
Total shelf load

Work surface:

Work Surface Load Category:				
CAT 1	CAT 2	CAT 3	CAT 4	Other
200 lb	600 lb	1000 lb	1200 lb	

Table 1

Work surface load [ ]

\+ Total shelf load [ ]

Fully loaded maximum [ ]

x 0.02 [ ]

Fz Applied Load

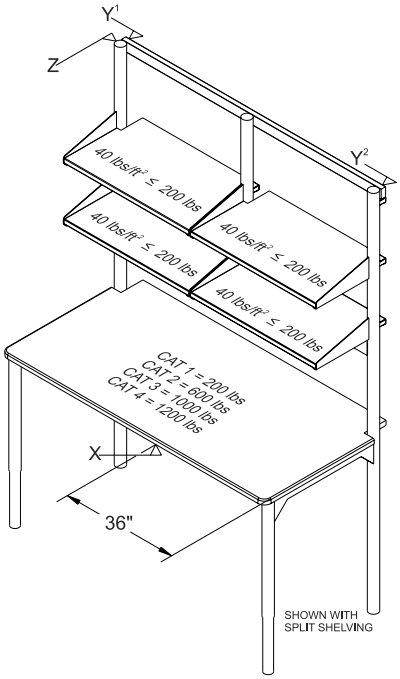

6.10 Strength Test Configuration 3 (Single Sided, Supported)

6.10.2

X	☐ Pass	☐ Fail
Yavg	☐ Pass	☐ Fail
Z	☐ Pass	☐ Fail

6.10.4

X	☐ Pass	☐ Fail
Yavg	☐ Pass	☐ Fail
Z	☐ Pass	☐ Fail

6.11 Stability Test Configuration 3 (Single Sided, Supported) Anchored Units

6.11.2

X	☐ Pass	☐ Fail
Z	☐ Pass	☐ Fail

6.12 Resistance to Overturn Configuration 3 (Single Sided, Supported) Free Standing Units

6.12.2

☐ Pass ☐ Fail

SEFA 10 - 2013
Test Report
Adaptable System

Class _____ per section 5.1-5.8

Configuration 4
Double Sided – Simply Supported

Load Category _____ per 6.3.2

Anchor Details:

_____
_____
_____
_____
_____
_____
_____
_____

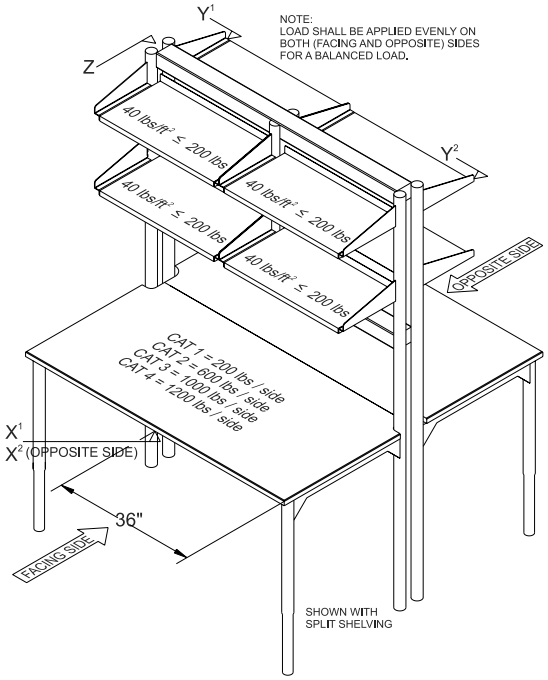

Shelving:

Shelf is: ☐ Continuous ☐ Split

Shelf Material _____

Shelf size:

[ ] ft x [ ] ft = [ ] sq.ft.

x 40 lb = [ ] each
Shelf live load

Continuous Shelves x 4 = [ ] lbs
or **Total shelf load**

Split Shelves x 8 = [ ] lbs
Total shelf load

Work surface:

Work Surface Load Category:				
CAT 1	CAT 2	CAT 3	CAT 4	Other
400 lb	1200 lb	2000 lb	2400 lb	

Table 1

Work surface load [ ]

\+ Total shelf load [ ]

Fully loaded maximum [ ]

x 0.02 [ ]

Fz Applied Load

6.13 Strength Test Configuration 4 (Double Sided, Supported)

6.13.2

X	☐ Pass	☐ Fail
Yavg	☐ Pass	☐ Fail
Z	☐ Pass	☐ Fail

6.13.4

X	☐ Pass	☐ Fail
Yavg	☐ Pass	☐ Fail
Z	☐ Pass	☐ Fail

6.14 Stability Test Configuration 4 (Double Sided, Supported) Anchored Units

6.14.2

X	☐ Pass	☐ Fail
Z	☐ Pass	☐ Fail

6.15 Resistance to Overturn Configuration 1 (Single Sided, Cantilevered) Free Standing Units

6.15.2

☐ Pass ☐ Fail

©SEFA 5th Edition Desk Reference - Version 3.0

APPENDIX A
CLASS ADAPTABILITY RATING CHART

How to use these charts:
Each Class is given a numerical range (low to high) for each function. Different configurations of each system can have an impact on a particular function. The Total Point score establishes the Class designation.

POINTS DEFINITION
0 = Requires new components
1 = Requires trade contractors & casework installation personnel
2 = Requires casework installation personel
3 = Can be accomplished with facility personnel
4 = Can be accomplished by the end user

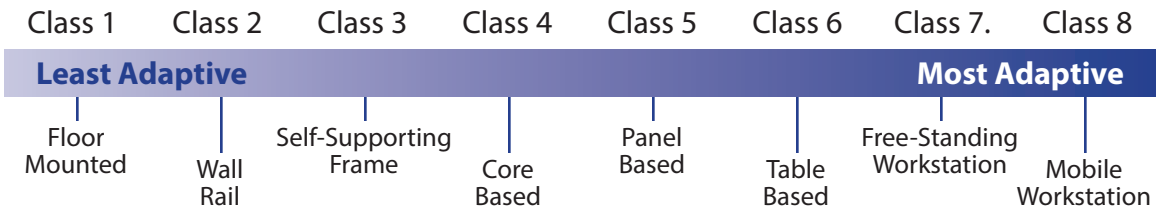

ADAPTABILITY RATING CHART

Action	Class 1	Class 2	Class 3	Class 4	Class 5	Class 6	Class 7	Class 8
Relocate a Cabinet	1–2	3–3	2–4	2–4	2–4	2–4	2–4	3–4
Relocate a Bench	1–2	1–3	2–3	2–3	2–3	4–4	3–4	4–4
Adjust a Worksurface	0–0	3–4	2–3	2–4	3–4	3–4	3–3	3–4
Add a Shelf	2–4	2–4	4–4	4–4	4–4	4–4	4–4	4–4
Adjust a Shelf	2–4	3–4	4–4	4–4	4–4	4–4	4–4	4–4
Relocate a Utility	1–1	1–1	1–1	1–1	1–1	1–1	3–4	3–4
Adaptability Range	**7–13**	**13–19**	**15–19**	**15–20**	**16–20**	**18–21**	**19–23**	**21–24**

APPENDIX B
CLASS FUNCTIONALITY RATING CHART

POINTS DEFINITION

CLEANABILITY

1 = System creates multiple gaps and hard to reach surfaces
2 = Multiple gaps — surfaces reachable
3 = Sealed worksurfaces and toespaces — reachable worksurfaces with minor gaps
4 = Sealed worksurfaces and toespaces — all surfaces reachable and sealed

STORAGE VOLUME

1 = Prohibits storage units — allows for shelves only
2 = Restricted by suspended unit sizing for fit within system components
3 = Restricted by base unit sizing to fit under suspended surfaces
4 = Utilizes full volume of bench space available

STABILITY – OVERTURN

0 = Fail
1 = Pass

POINTS DEFINITION

STRENGTH – OVERALL
Single Sided (Worksurface & Shelves)

0 = Less than 600 pounds
1 = 600 pounds
2 = 1000 pounds
3 = 1400 pounds
4 = Over 1400 pounds

STRENGTH – OVERALL
Double Sided (Worksurface & Shelves)

0 = Less than 1200 pounds
1 = 1200 pounds
2 = 2000 pounds
3 = 2800 pounds
4 = Over 2800 pounds

STRENGTH – WORKSURFACE

1 = 200 pounds
2 = 600 pounds
3 = 1000 pounds
4 = Over 1000 pounds

FUNCTIONALITY RATING CHART

Action	Class 1	Class 2	Class 3	Class 4	Class 5	Class 6	Class 7	Class 8
Cleanability	3–4	1–3	1–3	1–3	1–3	1–3	2–3	1–3
Storage Volume	4–4	1–3	1–3	1–3	1–3	1–3	1–3	1–3
Strength – Overall	4–4	2–3	2–4	3–4	2–4	2–3	2–3	2–4
Strength – Work Surface	1–4	1–4	1–4	1–4	1–4	1–4	1–4	1–4
Stability – Tipping	0–1	0–1	0–1	0–1	0–1	0–1	0–1	0–1
Functionality Range	**12–17**	**5–14**	**5–15**	**6–15**	**5–15**	**5–14**	**6–14**	**5–15**

©SEFA 5th Edition Desk Reference - Version 3.0

Scientific Equipment & Furniture Association
Recommended Practices

SEFA 11-2020
Liquid Chemical Storage Cabinets

SEFA World Headquarters
65 Hilton Avenue
Garden City, NY 11530

Fax: 516-294-2758
www.sefalabs.com

SEFA SPELLS SAFE®

Table Of Contents

	Page
Committee Members	**426**
Foreword	**427**
Sections	
1.0 Scope	**428**
2.0 Purpose	**428**
3.0 Definitions	**428**
4.0 Construction	**430**
4.1 Flammable/Solvent Storage Cabinets	
4.1.1 Purpose	
4.1.2 Construction	
4.1.3 Venting	
4.1.4 Filtered Storage Cabinets	
4.2 Hazardous Storage Cabinets	
4.2.1 Purpose	
4.2.2 Construction	
4.2.3 Venting	
4.2.4 Explosion Proof Refrigerators	
5.0 Requirements (testing)	**432**
5.1 Flammable Storage Cabinets	
5.2 Hazardous Storage Cabinets	
5.3 Shelf Loads	
6.0 Location	**432**
7.0 Installation	**432**
8.0 Storage Recommendations	**432**
8.1 General	
8.2 Acid Storage	
8.3 Base Storage	
8.4 Flammable Liquid Storage	
8.5 Peroxide Forming Chemical Storage	
8.6 Water Reactive Chemical Storage	
8.7 Oxidizer Storage	
8.8 Toxic Components	
9.0 Ventilation Recommendations	**435**
10.0 Reference Sources	**435**

SEFA 11—Liquid Chemical Storage Committee Members

Co-Chairs

Sascha Kunkel - asecos GmbH
Gregory Rice - JUSTRITE Mfg., L.L.C.,

AirClean Systems

Air Master Systems

BSA Life Structures

Creative Solutions

DLR Group

Fundermax

HOK Architects

Institutional Casework

Jeio Tech Co., Ltd.

Kewaunee Scientific

Lab Crafters

Kirksey Architects

Mott Manufacturing

Samin Science

SmithgroupJJR

Trespa

Yamato Scientific

© SEFA - 5th Edition Desk Reference - Version 3.0

Foreword

SEFA Profile

The Scientific Equipment and Furniture Association (SEFA) is an international trade association comprised of manufacturers of laboratory furniture, casework, fume hoods and members of the design and installation professions. The Association was founded to promote this rapidly expanding industry and improve the quality, safety and timely completion of laboratory facilities in accordance with customer requirements.

SEFA Recommended Practices

SEFA and its committees are active in the development and promotion of Recommended Practices having domestic and international applications. Recommended Practices are developed by the association taking into account the work of other standard-writing organizations. Liaison is also maintained with government agencies in the development of their specifications.

SEFA's Recommended Practices are developed in and for the public interest. These practices are designed to promote a better understanding between designers, architects, manufacturers, purchasers, and end-users and to assist the purchaser in selecting and specifying the proper product to meet the user's particular needs. SEFA's Recommended Practices are periodically updated. The Recommended Practices are numbered to include an annual suffix which reflects the year that they were updated. SEFA encourages architects to specify these Recommended Practices as follows: "SEFA 11-2020".

SEFA Glossary of Terms

SEFA has developed a Glossary of Terms (SEFA 4-2020) for the purpose of promoting a greater understanding between designers, architects, manufacturers, purchasers and end users. The terms defined by SEFA are frequently used in contracts and other documents, which attempt to define the products to be furnished or the work involved. The Association has approved this Glossary in an effort to provide uniformity among those who use these terms. Where a specific Recommended Practice contains definitions, which differ from those in the Glossary of Terms, then the definitions in the specific Recommended Practice should be used.

SEFA encourages all interested parties to submit additional terms or to suggest any changes to those terms already defined by the Association. The definitions should be used to help resolve any disputes that may arise or to incorporate the applicable terms in any contract or related documents.

SEFA Disclaimer

SEFA uses its best effort to promulgate Recommended Practices for the benefit of the public in light of available information and accepted industry practices. SEFA does not guarantee, certify, or assure the safety or performance of any products, components, or systems tested, installed, or operated in accordance with SEFA Recommended Practices or that any tests conducted under its Recommended Practices will be non-hazardous or free from risk. SEFA encourages the use of third party independent testing where appropriate.

Note : ***Testing as described in this document must be performed and documented by a SEFA-approved third party testing facility. See Page 36 of the SEFA Desk Reference 5th Edition Version 3.0, or visit us at SEFALABS.COM for the most current list of SEFA-approved test labs.***

1. 0 Scope

These Recommended Practices apply to Liquid Chemical Storage Cabinets located in Laboratories. This document includes discussions of Flammable and Combustible cabinets, Filtered Storage Cabinets, Acid storage, Base Storage, and Corrosives.

These Recommended Practices are intended to be used to supplement the knowledge of a trained qualified professional. National, State or Local Codes always take precedence and should be observed.

2.0 Purpose

This document is intended to provide end users and planners with information on the type of storage cabinet required, construction, installation and the basic considerations to determine which chemicals should be stored together and which chemicals should not be stored together in the Laboratory.

3.0 Definitions

Acid compound – Any of a class of compounds that in aqueous solution turns blue litmus red and reacts with bases and with certain metals to form salts. A compound that dissociates in a solvent to produce the positive (+) ion of the solvent.

Acid Storage Cabinets – Cabinets in which acids are stored to avoid having large quantities of hazardous material in the laboratory work area. This reduces the risk of injury or damage to the work area of the laboratory. See hazardous Material Cabinets for more information.

Aerosol Propellant -Agent responsible for developing pressure in aerosol containers. The propellant is sometimes flammable and considered a hazardous waste.

Approved – Acceptable to the authority having jurisdiction.

Authority Having Jurisdiction – (AHJ) - An organization, office or individual responsible for enforcing the requirements of a code or standard, or for approving equipment, materials, and installation, or a procedure.

Auto ignition temperature - The auto ignition temperature of a substance is the lowest temperature at which it will spontaneously ignite in a normal atmosphere without an external source of ignition and it is also the required temperature of a heat source to ignite an ignitable atmosphere.

Base compound – (an alkali) A compound that is capable of so uniting with an acid as to neutralize its acid properties and form a salt. A compound that yields hydroxyl (-) ions in solution.

Base Storage Cabinets – Cabinets in which bases are stored to avoid having large quantities of hazardous material in the laboratory work area.

Fire Area – OSHA 1910.106(a)(12) A Fire Area is defined as an area of a building separated from the rest of the building by construction having a fire resistance rating of at least 1 hour and having all communicating openings properly protected by an assembly having a fire protection rating of at least 1 hour.

EN 14470-1 Fire resistance rating - A fire-resistance rating means the duration for which a passive fire protection system, in this case a storage cabinet, can withstand a fire resistance test.

NFPA 30 - Fire resistance rating is a cabinet's ability to keep the inside temperature below 325°F (163°C) which is a conservative temperature well below the auto ignition temperature of 99% of flammable liquids that could be stored during a 10-minute fire test per NFPA 251.

FM Global (FM) - A nationally recognized independent testing laboratory established by the insurance industry to which manufacturers submit their products for evaluation of ability to meet safety requirements under intended use. Products meeting these requirements are "FM approved."

© SEFA - 5th Edition Desk Reference - Version 3.0

Filtered Storage Cabinet - Continuously vented chemical storage cabinet equipped with its own filtration and ventilation device designed to eliminate the propagation and accumulation of manufacturer pre-approved and verified toxic contaminants. A filtered storage cabinet is typically not attached to any external exhaust system.

Flammable Liquids - Per OSHA/GHS, flammable liquid means any liquid having a flashpoint at or below 199.4°F (93°C).

- Category 1 shall include liquids having flashpoints below 73.4 °F (23 °C) and having a boiling point at or below 95 °F (35 °C).
- Category 2 shall include liquids having flashpoints below 73.4 °F (23 °C) and having a boiling point above 95 °F (35°C).
- Category 3 shall include liquids having flashpoints at or above 73.4 °F (23 °C) and at or below 140 °F (60 °C).
- Category 4 shall include liquids having flashpoints between 140 °F (60 °C) and 199.4 °F (93°C).

Flammable Liquids Storage Cabinet - Used to store and organize flammable liquids in approved closed containers. To guard liquids stored from their auto ignition temperature of the liquids stored in the event of a fire. Flammable liquids storage cabinets are often used to increase the maximum allowable quantities, to separate incompatible materials, and should be locked to prevent unauthorized access.

Flashpoint - is the lowest temperature that a flammable liquid can form an ignitable vapor in mixture with air. It is a measurement which we rate the volatility for a flammable liquid.

GHS - Globally Harmonized System of Classification and Labeling of Chemicals

Hazardous material storage cabinets - Hazardous chemicals can be reactive, causing explosions, fires, contamination and can be corrosive, toxic, etc., Storage in these cabinets can include: corrosive solids, corrosive liquids, flammable solids, organic peroxide formulations, oxidizer solids or liquids, pyrophoric solids or liquids, toxic or highly toxic solids or liquids, unstable solids or liquids, water-reactive solids or liquids in segregation. These cabinets can be required by fire codes to increase the maximum allowable quantities, separate incompatible materials, and should be locked to prevent unauthorized access.

Laboratory work area – The main area of the laboratory where chemicals are used during experiments, testing or teaching.

Litmus – a blue dye stuff made by fermenting certain coarsely powdered lichens. It is turned red by acids and remains blue when treated with an alkali**.**

May - When used indicates an alternate requirement or option.

Poison – General term for chemicals that can injure or kill by ingestion or contact.

Preparation Room – Room usually located adjacent to the laboratory for preparing chemical compounds and experiments to be used in the laboratory. Chemical storage cabinets are usually located in the preparation room.

Shall - Where used, indicates a mandatory requirement.

Should – Where used indicates recommendation.

Solvent – Substance that dilutes or disperses another substance. Ranging from water and air to complex hydrocarbons.

Toxic Chemical - A chemical that can produce injury if inhaled, swallowed, or absorbed through the skin.

Vent – Ducting or piping system designed to remove or change the air in an enclosed space like a storage cabinet.

4.0 Construction

4.1 Flammable/Solvent Storage Cabinets

4.1.1 Purpose

Flammable Liquid Storage Cabinets are used to store and organize flammable liquids in approved closed containers. To guard liquids stored from their auto ignition temperature in the event of a fire. Flammable Liquid storage cabinets are often used to increase the maximum allowable quantities, to separate incompatible materials, and should be locked to prevent unauthorized access.

According to OSHA and GHS regulations the definition of flammable and combustible liquids has changed to Flammable Liquids. Flammable Liquid Storage Cabinets are designed and constructed for Flammable liquid storage only. They are not intended for the storage of small cylinders of compressed or liquefied gases, especially those that are flammable. Likewise, incompatible materials, whether liquid or solid, should not be stored in these cabinets.

4.1.2 Construction

There are two permissible concepts (see AHJ) for Flammable Liquid Storage Cabinets.

US Construction/Performance Standards:

Labor Law:
OSHA Flammable Liquids 1910.106(d)(3), (1)(2)
OSHA Safety and Health Regulations for Construction 1926.152(b)(2), (1)(2)

Fire Code:
NFPA 30 Flammable and Combustible Liquids Code 9.5 (1)(2)
NFPA 1 Fire Code 66.9.5, (1)(2)
IFC 5704.3.2 (2)(3)

Flammable Liquids Cabinets must have the following warning: "FLAMMABLE - KEEP FIRE AWAY." Per OSHA, this labeling must be "in conspicuous lettering".

Cabinets should be:

(1) FM 6050 and/or
(2) UL 1275 approved;
(3) Some codes will require cabinets to have self-close doors. Check with Authority Having Jurisdiction (AHJ) for codes having jurisdiction.

Canadian Performance Standards:

National Fire Code of Canada Div. B Sec. 4.2.10.5. shall conform to ULC/ORD-C1275

Note: Some Provinces and localities in Canada will allow cabinets in compliance to the NFPA 30 or FM 6050 Approved. Check with Authority Having Jurisdiction (AHJ).

Storage cabinets shall be designed and constructed to limit the internal temperature to not more than 325 degrees Fahrenheit when subjected to a 10 minute fire test using the standard time-temperature curve as set forth in Standard Methods of Fire Tests of Building Construction and Materials, NFPA 251-1969 which is incorporated by reference as specified in OSHA Section 1910.6. All joints and seams shall remain tight and the door shall remain securely closed during the fire test. Cabinets shall be labeled in conspicuous letters "Flammable – Keep Fire Away."

European Performance Standards:

Flammable Liquids Storage cabinets shall meet the requirements of EN 14470-1. Self-closing doors are mandatory. Cabinets must be marked according to section 8 of EN 14470-1 and must specifically indicate the fire resistance rating (type classification) of the cabinet (15,30,60 or 90 minutes). Cabinets must be independently third party tested by an accredited testing institute.

4.1.3 Venting

Typically the requirements for venting are dictated by the AHJ.

Cabinets are not required to be vented for fire protection purposes; however, if venting is required the following shall apply:

© SEFA - 5th Edition Desk Reference - Version 3.0

The vent openings shall be ducted directly to a safe location outdoors or to a treatment device designed to control volatile organic compounds (VOCs) and ignitable vapors in such a manner that will not compromise the specified performance of the cabinet or safety and in a manner that is acceptable to the authority having jurisdiction. For non-vented flammable storage cabinets, it is recommended that the vent openings shall be sealed with the bungs supplied with the cabinet or with bungs specified by the manufacturer of the cabinet.

Vent bungs accommodate a (US) 2"NPT (DN50) threaded rigid steel pipe. Any blowers should be specified as safe for handling flammable fumes (explosion proof) and should be installed to evacuate fumes from the cabinet using negative pressure (suction) to avoid dispersing fumes into the room itself.

Cabinets made to European Standard EN 14470-1 come with self-closing vent openings and require no manual sealing. The self-closing is triggered at a temperature of approx. 158°F (70°C).

It is recommended to retain a professional engineer to design a vent system and follow the guidelines listed here. Also, it is important that they consult the local building codes, fire codes, and the authority having jurisdiction to understand the laws and to look for recommendations/ interpretations prior to making the investment.

Venting voids the UL listing, if applicable, as site conditions cannot be verified by UL.

4.2 Hazardous Storage Cabinets

4.2.1 Purpose

The purpose of a Hazardous Storage Cabinet is to restrict the access to chemicals that might be harmful or dangerous to students or other personnel not qualified to have access and/or to provide an appropriate corrosive resistant environment for storage of hazardous materials. Also cabinets should and shall be designed such that in case of an accidental spill the cabinet will safely contain the spill. These chemicals may include but are not limited to Corrosives, Acids, Bases, Oxidizers, Poisons and other chemicals not of a Flammable or Combustible nature.

4.2.2 Construction

The interior of the cabinet shall be treated, coated or constructed of materials that are not reactive with the chemical being stored. The secondary containment trough shall be constructed with the same chemical resistance and with a depth of 2" minimum.

Doors may be provided with a suitable means of locking and securing the cabinet. This locking mechanism must be compatible with the chemical being stored.

The use of Metal Fasteners and shelf supports inside cabinet must have the same chemical resistance as the interior of the cabinet.

Cabinets should be clearly marked with a minimum 2" letters and so identified with the chemical that is being stored. Eg., ACIDS, BASES, POISONS, etc.

Hazardous Storage Cabinets shall be so designed that all chemicals are not stored above shoulder height with the overall cabinet height of not more than 65". Special care shall be taken to secure tall cabinets to walls. Special care shall be taken to provide seismic anchorage as required per local codes.

If vented, cabinet should be vented from the bottom since most Hazardous Vapors are heavier than air, however lighter than air chemicals need vents located at the top of the cabinet. This venting shall not compromise the ability for the cabinet to contain a spill should one occur inside the cabinet. Also a mechanical exhaust ventilation is preferred and it should comply with NFPA 91.

The installation of the vent into the ductwork of a fume hood exhaust is preferred.

4.2.3 Venting Hazardous Storage Cabinets

Venting is recommended to exhaust noxious fumes that may build-up in an enclosed acid storage cabinet, and cause discomfort and/or compromise the respiratory health of laboratory personnel. When a plastic product for venting of cabinets is specified, it is recommended that polyolefin pipe be used. See ASTM 1412. PVC piping should not be used for venting, as it will burn black if ignited and produce chlorine gas.

5.0 Requirements

5.1 Flammable Liquid Storage Cabinets

Flammable Liquid Storage Cabinets should be approved as being acceptable by the authority having jurisdiction.

Cabinets should be independently tested by approved third party testing facilities certifying that the cabinets meet one of the following performance standards:

UL 1275

FM 6050

ULC 1275

EN-14470-1

or an agency acceptable to the authority having jurisdiction;

5.2 Hazardous Storage Cabinets

Hazardous Storage Cabinets should be approved as being acceptable by the authority having jurisdiction.

5.3 Shelf Loads

Should not exceed manufacturer's recommendation.

6.0 Location

Liquid Chemical Storage Cabinets shall be in an area of the laboratory with low traffic away from the main work area. It is important to segregate incompatible chemicals. Eliminate ignition sources such as open flame, hot surfaces, electrical equipment or static electricity from the storage area. Make sure appropriate fire extinguishers and/or sprinkler systems are in the area. An eyewash and safety shower must be readily accessible to areas where liquid chemicals are stored, per OSHA 1910.106(d)(3)(l). Consult laws and codes and the authority having jurisdiction for further information.

Do not store chemicals in Fume hoods or under sinks where there may be exposure to water. Do not store chemicals on bench tops. Such storage is more vulnerable to accidental breakage by laboratory, housekeeping, and emergency response personnel. Never store chemicals on the floor.

7.0 Installation

Installation shall be performed by an experienced laboratory equipment installer. Metal cabinets should be securely installed and grounded when necessary; if chemicals are being dispensed directly from a cabinet then a method for grounding the container must also be provided.

8.0 Storage Recommendations

In developing a storage plan many factors must be considered: types of materials to be stored, quantities, sensitivity to sun light, moisture, and other chemicals. Some distinct types of acids shouldn't be stored together. Some chemicals require special allowances for venting and special caps that will vent in case of gas pressure build up. The following should be helpful in establishing a chemical storage plan.

8.1 General

1) Store chemicals that are compatible and

© SEFA - 5th Edition Desk Reference - Version 3.0

of the same hazard class. Flammables should be stored with flammables and oxidizers with oxidizers.

2) Do not expose chemicals to direct sunlight and keep them away from area heaters or heat sources.

3) Corrosive chemicals should be stored in plastic trays large enough to contain spills and leaks.

4) Label all chemicals by name and concentration, include dates received and date opened.

5) Do not store hazardous chemicals higher than 60" above the finished floor.

6) Solid chemicals should be separated from liquids.

7) Chemicals should not be stored under sinks or in fume hoods.

8) Never store flammable liquids in un-fire-rated refrigerators. These refrigerators contain ignition sources that may cause sparks.

9) Never store chemicals and food in the same refrigerator.

10) Explosion-proof refrigerators shall comply with NFPA 42 12.2.2 (2004) & NFPA 70 National electric code.

11) Flammables should never be stored with Corrosives (ACIDS/BASES)

12) Review with the authority having jurisdiction; University or EHS professional with regard to allowable limits.

8.2 Acid Storage

1) Store large bottles of acids on lower shelves of acid storage cabinets.

2) Oxidizing acids should be stored separately from organic acids, flammables, and combustible materials.

3) Acids should be stored separately from bases and active metals like sodium, magnesium, and potassium.

4) Keep acids separated from chemicals that can generate toxic gases on contact, such as sodium cyanide and iron sulfide.

5) Store Acids in chemical resistant trays that are capable of containing any spillage or leakage.

6) Some acids are incompatible and should be stored separately.

7) Never store cyanides with acids or oxidizers

8) Acid should be returned to cabinets in approved safe closed containers and free of harmful residues as part of hygiene safety protocol

8.3 Base Storage

1) Store Bases and Acids separately.

2) Large bottles of bases should be stored on lower shelves or in a corrosive cabinet.

3) Store Bases in chemical resistant trays that are capable of containing any spillage or leakage.

4) Some bases are incompatible and should be stored separately.

5) Bases should be returned to cabinets in approved safe closed containers and free of harmful residues as part of hygiene safety protocol.

8.4 Flammable Liquid Storage

1) Always store flammables in approved enclosures.

2) Always be aware of static electricity when transferring flammable liquids from one container to another, especially metal containers. Metal flammable storage cabinets should be grounded.

3) Make sure that all flammables stored together are compatible.

4) Review NFPA guidelines for flammable storage.

8.5 Peroxide Forming Chemical Storage

1) Peroxide forming chemicals should be stored in airtight containers in a dark, cool, and dry place.

2) Peroxide forming chemicals should be properly disposed of before the date of expected peroxide formation (six months after opening).

3) Make sure that all peroxide forming chemicals are stored by compatibility.

4) Shock sensitive and detonable materials are to be stored in secondary containers large enough to hold the container contents in case of breakage; i.e., picric and perchloric acids.

5) Picric, if dry, must remain dry; if wet, it must remain wet. Crystal formation on caps, etc., poses an imminent danger. Containers should be routinely inspected for peroxide formation. Chemicals should be labeled with date received, date opened, and disposal/expiration date.

6) Suspicion of peroxide contamination should be immediately investigated.

8.6 Water Reactive Chemical Storage

1) Water Reactive chemicals should be stored in a cool and dry place.

2) Make sure that all water reactive chemicals are stored by compatibility.

8.7 Oxidizer Storage

1) Oxidizers should be stored away from flammables, combustibles, and reducing agents (e.g. zinc, alkaline metals, etc.)

2) Make sure that all oxidizers are stored by compatibility.

3) Never store cyanides with acids or oxidizers.

8.8 Toxic Compounds

1) Toxic compounds should be stored according to the nature of the chemical, with the appropriate security employed when necessary.

2) A "Poison Control Network" telephone number should be posted in the laboratory along with CDC contact information. (Center for Disease Control)

3) Make sure that all toxins are stored by compatibility.

Essential Laboratory Reference for Hygiene, Safety, and compliance to laws:

1) OSHA Laboratory Guide Lines:
https://www.osha.gov/Publications/ laboratory/ OSHA3404laboratory-safety-guidance.pdf

2) EPA Laboratory Disposal Information:
https:// www.epa.gov/sites/production/ files/2015-06/ documents/lesdid.pdf

3) One of the best references on laboratory safety and hygiene is Prudent Practices in the Laboratory:
https://www.nap.edu/catalog/12654/prudent-practices-in-the-laboratory-handling-and- management-of-chemical

Others:
http://www.ehso.com/ ChemicalStorageGuidelines.htm

http://ehs.berkeley.edu/sites/default/files/ lines-of-services/hazardous-materials/ chemicalstoragebooklet.pdf

https://www.osha

Note! Care must also be taken when disposing of materials. Separate waste containers should be

© SEFA - 5th Edition Desk Reference - Version 3.0

used for each type of waste.

9.0 Ventilation Recommendations

Reference NFPA 45 for proper ventilation Guidance when US Concept or FM Approval Standard Cabinets are employed.

10.0 Reference Sources

(All sources refer to the latest edition)

- ANSI/AIHA Z9.5 – 2012 Laboratory Ventilation Standard

- ASTM F1412-16 (American Society for Testing and Materials) Standard Specification for Polyolefin Pipe and Fittings for Corrosive Waste Drainage Systems"

- CANADA-ULC/ORD-C1275 Guide For The Investigation Of Storage Cabinets For Flammable Liquid Containers

- EN 14470-1 - Safety Cabinet Standard for Flammable Products

- FM 6050 Storage Cabinets (Flammable and Combustible Liquids)

- IBC International Building Code

- IFC International Fire Codes

- Merriam-Webster: Dictionary and Thesaurus

- NFPA 1 Fire Code

- NFPA 400 Hazardous Material Code

- NFPA Flammable & Combustible Liquids Code

- NFPA Standard for Exhaust Systems for Air Conveying of Vapors, Gases, Mists and Combustible Particulate Solids

- NFPA Standard on Fire Protection for Laboratories Using Chemicals

- OSHA 29 CFR 1910.106 Flammable Liquids

- UL 1275 Standard for Flammable Liquid Storage Cabinets

- University of California Berkeley, Office of Environment, Health & Safety (EH&S Fact Sheet 2014)

Important Industry Resources

- American National Standards Institute (ANSI) **www.ansi.org**
- California Air Resources Board (CARB) Title 13 - **https://ww2.arb.ca.gov**
- Department of Transportation (DOT) - **www.dot.gov**
- Environmental Protection Agency (EPA) 40 CFR - **www.epa.gov**
- FM Global (FM) - **www.fmglobal.com**
- International Code Council (ICC) - **www.iccsafe.org**
- *International Fire Code© 2012 Edition*
- National Fire Code of Canada (NFC) - **www.nationalcodes.ca**
- National Fire Protection Association (NFPA) - **www.nfpa.org**
- *NFPA 30, Flammable Combustible Liquids Code – 2015 Edition*
- *NFPA 1, Fire Code™ – 2012 edition*
- *Fire Protection Guide to Hazardous Materials, 13th ed.*
- National Institute for Occupational Safety & Health (NIOSH) - **www.cdc.gov/niosh**

- Occupational Safety and Health Administration - **www.osha.gov**
  (OSHA 29 CFR 1910 (.106, .123, .125, .144, .1200 and 1926.252)

- OSHA/EPA Occupational Chemical Database - **https://www.osha.gov/chemicaldata/**

- Underwriters Laboratories - **www.ul.com**

- Underwriters Laboratories of Canada - **www.ulc.ca**

© SEFA - 5th Edition Desk Reference - Version 3.0

The Scientific Equipment and Furniture Association graciously acknowledges the support of our advertisers:

sheldonlabs™

DIVERSIFIED WOODCRAFTS

DURCON®

A WILSONART COMPANY

ac® makes air clean

ECOM seating

industrial, commercial and laboratory seating

FUNDERMAX®

for people who create

CARDINAL ENVIRONMENTAL

sheldonlabs™

SHELDONLABS.COM

casework + equipment laboratory solutions

We are creative. Since our founder imagined a better classroom in 1898, we have continued to imagine, design and create better, more flexible learning environments. Whether our designers are using the ground-breaking Axis® table or a myriad of other Sheldon designed products, our focus continues to be on teachers, students and solutions to inspire learning.

AN INDUSTRY LEADER OF BRANDS:

DIVERSIFIED WOODCRAFTS | Info@DiversifiedWoodcrafts.com DiversifiedWoodcrafts.com

sheldonlabs™ | Sales@SheldonLabs.com SheldonLabs.com

OCRiVER LABORATORY FURNITURE | Info@OCriver.com OCriver.com

OCRiVER
LABORATORY FURNITURE
OCRIVER.COM

When it's more than a lab.

It's about all the possibilities. We create environments that attract the best of the best that push the boundaries of exploration and discovery. And we make the process direct—creating a fast and efficient line of communication with zero margin for errors. We are with you every step of the way to ensure your project meets yours and our high standards.

AN INDUSTRY LEADER OF BRANDS:

DIVERSIFIED WOODCRAFTS
Info@DiversifiedWoodcrafts.com
DiversifiedWoodcrafts.com

sheldonlabs
Sales@SheldonLabs.com
SheldonLabs.com

OCRiVER LABORATORY FURNITURE
Info@OCriver.com
OCriver.com

DURCON®

A WILSONART COMPANY

Celebrating 31 YEARS OF SEFA MEMBERSHIP 1989-2020

EPOXY | SOLICOR | PHENOLIC | GREENSTONE

EPOXY | BLACK ONYX

SOLICOR | GRAPHITE

LABORATORY GRADE

Durcon Epoxy products are specialized worksurfaces, sinks and accessories expertly manufactured for the laboratory environment. Decades of dedicated engineering and development have led to a product with unmatched resistance to the harsh chemicals, heat, fire, staining, pitting and marring often experienced at top tier university, pharmaceutical, biology, STEM and chemistry laboratories around the world. These establishments demand superior performance from their equipment and furniture, and Durcon Epoxy products deliver.

Visit us online to learn more at **www.durcon.com.**

©2020 Durcon® A Wilsonart Company

206 Allison Dr., Taylor, Texas 512.595.8000 sales@durcon.com

polyproLABS®

Polypropylene:

- ➜ Casework
- ➜ Fume hoods
- ➜ laminar flow equipment

MICROVOID®

A proven, state-of-the-art line of custom fabricated laboratory equipment.

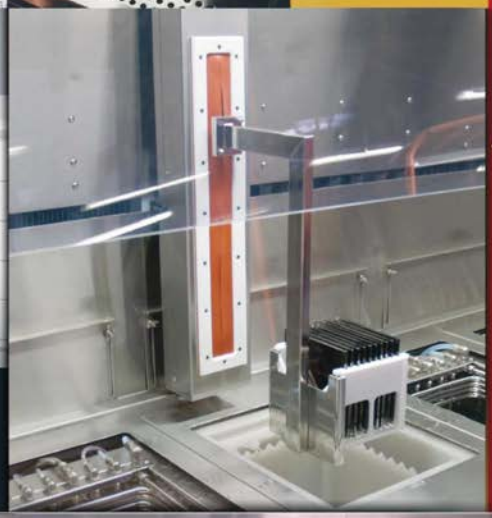

- ➜ Wet process stations
- ➜ Chemical fume hoods
- ➜ Glove boxes
- ➜ Robotics

HYDROVOID®

- ➜ Dry boxes
- ➜ Desiccator cabinets
- ➜ Carts and racks
- ➜ Custom fabrication in Acrylic, PVC, Lexan, Polypropylene and Stainless Steel.

AIR CONTROL, INC.

makes air clean

P.O. Box 1738
Henderson, NC 27536 USA
Voice: 252.492.2300 / Fax: 252.492.9225

www.aircontrol-inc.com

© 2020 AIR CONTROL, INC.

Ergonomic Laboratory & Industrial Chairs

Quick Shipping | 15 Year Warranty | Chair building App | Built-to-Order

Textured, antibacterial Supernova™ vinyl

Heavy duty materials

Adjustable height, angle, and depth of arm supports

3 different pneumatic cylinder height ranges available – all with lifetime warranty

Self-braking casters for ultimate workplace safety

Large back support, adjustable 4- ways

Waterfall seat for improved circulation, combined with angle and height adjustments for optimal ergonomics

Foot rings can be easily adjusted up or down!

24″ aluminum or 25″ nylon reinforced fiberglass base

Our chairs and stools are constructed of rugged, easy to clean materials at our facility in Cookeville Tennessee. Every product is designed to enhance productivity and provide comfort for long hours on the job.

ECOM seating
industrial, commercial and laboratory seating

info@ecomseating.com | (888) 696-8951 | P.O. Box 86 Cookeville, TN 38503 | www.ecomseating.com

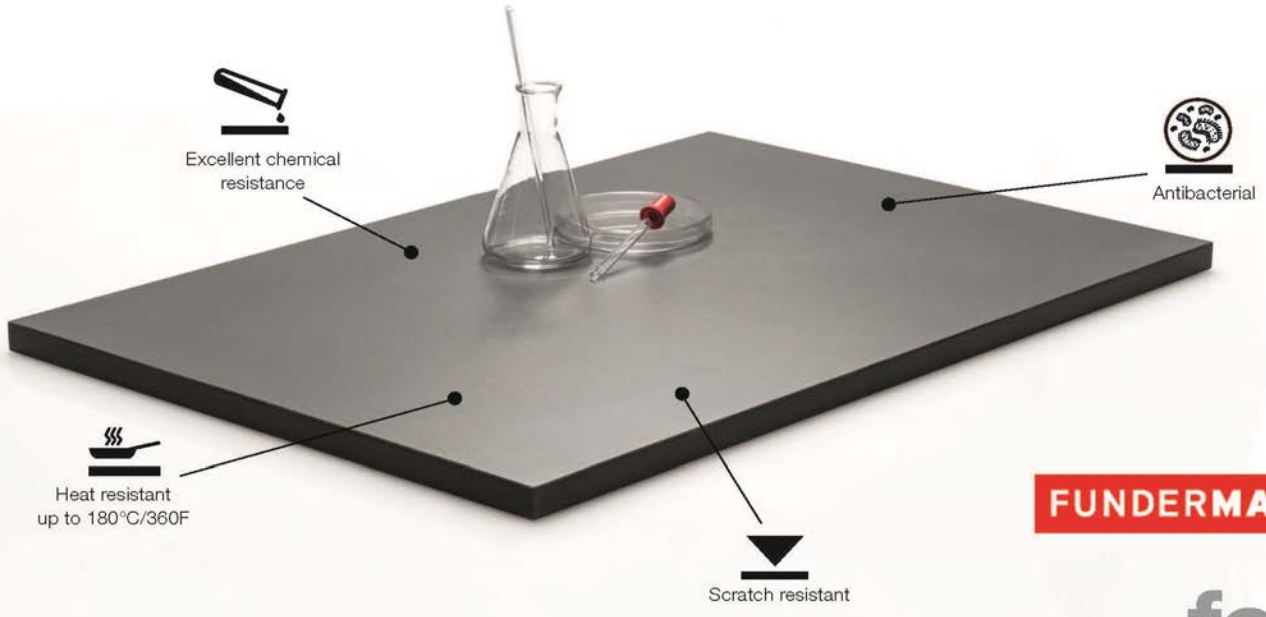

FUNDERMAX®

LABORATORY SURFACES FOR EXTREME DEMANDS

If you are looking for a work surface that resists even the most aggressive chemicals in the extreme working conditions of the laboratory sector, there is only one choice: **Max Resistance²**. A product enhancement from the established FunderMax work surface panels.

For further information please contact: office.america@fundermax.biz

www.fundermax.at

for people who create

SEFA-8-2020 Compliance Testing for Lab Grade Furniture, Casework, Shelving and Tables

- One of the original SEFA Approved Testing Facilities providing SEFA Services since 2006
- SEFA 8 Cabinet Finish Tests on Wood, Metals, Plastic Laminate, Polypropylene and Phenolic substrates in our Certified Analytical Laboratory in Sheboygan, Wisconsin
- We can also arrange all other SEFA Performance Criteria tests of base cabinets, wall cabinets and tables in conjunction with a local collaborative SEFA Approved Testing Facility
- Cardinal Environmental's Laboratory Director and Staff have been performing SEFA Chemical Resistance Testing for over 20 years

Let Cardinal Environmental assist you with your SEFA Compliance Testing needs

Contact Scott Hanson at shanson@cardinalenvironmental.com
3303 Paine Avenue, Sheboygan, Wisconsin ** 920-459-2500