Scientific Equipment & Furniture Association

SEFA 8-PL-2026
Laboratory Grade Plastic Laminate Casework Standard

SEFA World Headquarters
1320 Main Street - Ste 300
Columbia, SC 29201

Tel: 516-294-5424
www.sefalabs.com

SEFA SPELLS SAFE

Table of Contents

	Page
Committee Co-Chairs	1
Foreword	2
Sections	
1.0 Scope	3
2.0 Purpose	3
3.0 Definitions	3
3.1 Description of Testing Apparatus	
4.0 Base Cabinets	7
4.1 Description of Test Unit	
4.2 Cabinet Load Test	
4.2.1 Purpose of Test	
4.2.2 Test Procedure	
4.2.3 Acceptance Level	
4.3 Cabinet Concentrated Load Test	
4.3.1 Purpose of Test	
4.3.2 Test Procedure	
4.3.3 Acceptance Level	
4.4 Cabinet Torsion	
4.4.1 Purpose of Test	
4.4.2 Test Procedure	
4.4.3 Acceptance Level	
4.5 Cabinet Submersion Test	
4.5.1 Purpose of Test	
4.5.2 Test Procedure	
4.5.3 Acceptance Level	
4.6 Spill Containment Test	
Not applicable to Plastic Laminate Casework	
5.0 Doors	9
5.1 Door Hinge Test	
5.1.1 Purpose of Test	
5.1.2 Test Procedure	
5.1.3 Acceptance Level	
5.2 Door Impact Test	
Not applicable to Plastic Laminate Casework	
5.3 Door Cycle Test	
5.3.1 Purpose of Test	
5.3.2 Test Procedure	
5.3.3 Acceptance Level	
6.0 Drawers	10
6.1 Drawer Static Test	
6.1.1 Purpose of Test	
6.1.2 Test Procedure	
6.1.3 Acceptance Level	
6.2 Drawer and Door Pull Test	
Not applicable to Plastic Laminate Casework	
6.3 Drawer Impact Test	
6.3.1 Purpose of Test	
6.3.2 Test Procedure	
6.3.3 Acceptance Level	
6.4 Drawer Internal Impact Test	
6.4.1 Purpose of Test	
6.4.2 Test Procedure	
6.4.3 Acceptance Level	
6.5 Drawer Cycle Test	
6.5.1 Purpose of Test	
6.5.2 Test Procedure	
6.5.3 Acceptance Level	
7.0 Shelving	12
7.1 Description of Test Unit	
7.2 Shelf Load Test	
7.2.1 Purpose of Test	
7.2.2 Test Procedure	
7.2.3 Acceptance Level	
8.0 Cabinet Surface Finish Tests	12

Table of Contents (cont'd)

Page

8.1 Chemical Spot Test
8.1.1 Purpose of Test
8.1.2 Test Procedure
8.1.3 Acceptance Level

8.2 Boiling Water Test
8.2.1 Purpose of Test
8.2.2 Test Procedure
8.2.3 Acceptance Level

8.3 Ball Impact Test
8.3.1 Purpose of Test
8.3.2 Test Procedure
8.3.3 Acceptance Level

8.4 Paint Adhesion Test
Not applicable to
Plastic Laminate Casework

8.5 Paint Hardness Test
Not applicable to
Plastic Laminate Casework

8.6 Dart Impact Test
8.6.1 Purpose of Test
8.6.2 Test Procedure
8.6.3 Acceptance Level

8.7 Edge Delaminating Test
8.7.1 Purpose of Test
8.7.2 Test Procedure
8.7.3 Acceptance Level

8.8 Edge Impact Test
8.8.1 Purpose of Test
8.8.2 Test Procedure
8.8.3 Acceptance Level

8.9 Wear Resistance (Abrasion) Test
8.9.1 Purpose of Test
8.9.2 Test Procedure
8.9.3 Acceptance Level

9.0 Wall Cabinets, Counter Mounted and Tall Units 16

9.1 Description of Test Unit

Page

9.2 Load Test
9.2.1 Purpose of Test
9.2.2 Test Procedure
9.2.3 Acceptance Level

10.0 Tables 17

10.1 Description of Test Unit

10.2 Load Test
10.2.1 Purpose of Test
10.2.2 Test Procedure
10.2.3 Acceptance Level

10.3 Table Racking
10.3.1 Purpose of Test
10.3.2 Test Procedure
10.3.3 Acceptance Level

11.0 Mobile Casework 18

11.1 Description of Test Unit

11.2 Static Stability Test
11.2.1 Purpose of Test
11.2.2 Test Procedure
11.2.3 Acceptance Level

11.3 Static Load Test
11.3.1 Purpose of Test
11.3.2 Test Procedure
11.3.3 Acceptance Level

11.4 Rolling Stability Test
11.4.1 Purpose of Test
11.4.2 Test Procedure
11.4.3 Acceptance Level

Endnotes 20

Appendix 1
SEFA 8 Comparison Chart 21

Forms 22

SEFA 8-PL Committee Co-Chairs

Bert Bowden Case Systems
bert@rwbowden.com

Wallace Twist - TMI Systems Corporation
wallace.twist@tmisystems.com

Foreword

SEFA Profile

The Scientific Equipment and Furniture Association (SEFA) is an international trade association comprised of manufacturers of laboratory furniture, casework, fume hoods and members of the design and installation professions. The Association was founded to promote this rapidly expanding industry and improve the quality, safety and timely completion of laboratory facilities in accordance with customer requirements.

SEFA Standards

SEFA and its committees are active in the development and promotion of Standards having domestic and international applications. Standards are developed by the association taking into account the work of other standard writing organizations. Liaison is also maintained with government agencies in the development of their specifications.

SEFA's Standards are developed in and for the public interest. These Standards are designed to promote a better understanding between designers, architects, manufacturers, purchasers, and end-users and to assist the purchaser in selecting and specifying the proper product to meet the user's particular needs. SEFA's Standards are periodically updated. The Standards are numbered to include an annual suffix which reflects the year that they were updated. SEFA encourages architects to specify these Standards as follows: "SEFA 8-PL-2026 Lab Grade Plastic Laminate Casework Standard."

PLEASE NOTE ON NOVEMBER 7, 2025 AT SEFA'S ANNUAL CONFERENCE THE MEMBERSHIP UNANIMOUSLY APPROVED CHANGING THE NAME OF THIS DOCUMENT FROM "SEFA RECOMMENDED PRACTICES" TO "SEFA STANDARD."

SEFA Glossary of Terms

SEFA has developed a Glossary of Terms (SEFA 4-2020) for the purpose of promoting a greater understanding between designers, architects, manufacturers, purchasers and end users. The terms defined by SEFA are frequently used in contracts and other documents, which attempt to define the products to be furnished or the work involved. The Association has approved this Glossary in an effort to provide uniformity among those who use these terms. Where a specific Recommended Practice contains definitions which differ from those in the Glossary of Terms, then the definitions in the specific Recommended Practice should be used.

SEFA encourages all interested parties to submit additional terms or to suggest any changes to those terms already defined by the Association. The definitions should be used to help resolve any disputes that may arise or to incorporate the applicable terms in any contract or related documents.

SEFA Disclaimer

SEFA uses its best effort to promulgate Standards for the benefit of the public in light of available information and accepted industry practices. SEFA does not guarantee, certify or assure the safety or performance of any products, components, or systems tested, installed, or operated in accordance with SEFA Standards or that any tests conducted under its Standards will be non-hazardous or free from risk. SEFA encourages the use of third party independent testing where appropriate.

Note : ***Testing as described in this document must be performed and documented by a SEFA-approved third party testing facility. Visit SEFALABS.COM for the most current list of SEFA-approved test labs.***

© SEFA 8PL-2026 Lab Grade Plastic Laminate Casework

1.0 Scope

The scope of this document is intended to provide manufactures, specifiers, and users tools for evaluating the safety, durability, and structural integrity of plastic laminate laboratory grade furniture and complimentary items. This document is inclusive of casework (base units, wall mounted units, counter mounted units, tall units, tables and, shelving systems). Casework, tables, and shelving manufactured for laboratory use should be subjected to the tests and procedures outlined below.

Plastic laminate laboratory grade casework shall consist of base cabinets, wall cabinets, counter mounted cabinets, tall cabinets, tables, and shelving and shall be constructed of a core, high pressure laminate, backer, liner or thermally fused melamine. A plastic laminate cabinet consists of top, bottom, end members and a back. Aggregate test results may vary by manufacturer. Procedures for testing performance criteria shall be as outlined in this document and results made available upon request. It is assumed that the test model reflects the performance criteria for all products. However there may be certain door/ drawer configurations and/or sizes outside the test unit config- uration identified that may not meet certain parts of this test. A test unit has been identified in this document with the sole purpose of obtaining continuity of procedures and results in a scientific format.

Great care should be exercised when heavy loads are applied to the cabinet and appropriate safety precautions taken to insure safety of testing personnel. Properly trained personnel should perform all tests. SEFA assumes no liability for damage or injury as a result of conducting these tests.

The acceptance levels are based on the cumulative field experience and laboratory testing of SEFA members based on actual needs of laboratories. This is a performance- based document. Specifications proscribing specific materials, hardware, finishes, workmanship or construction may or may not meet acceptance levels of this document. If proscriptive components of the specifications conflict with compliance of this document then the Architectural proscribed elements take precedent.

Testing as outlined in this document must be performed and documented by a SEFA- approved independent third party testing facility.

2.0 Purpose

The purpose of this document is to describe the distinguishing performance characteristics of plastic laminate laboratory grade furniture and complimentary items. Furniture shall be of a type specifically designed and manufactured for installation and use in a laboratory.

Although aggregate test results may vary from manufacturer to manufacturer, procedures for testing performance criteria shall be as outlined in this document and results made available upon request. It is assumed that the test model reflects the performance criteria for all products regardless of construction, size, or style used. A test unit has been identified in this document with the sole purpose of obtaining continuity for procedures and results in a scientific format.

3.0 Definitions

Acceptance Levels - The acceptance level for each performance criteria is based on the cumulative experience of actual field testing and laboratory results of SEFA members. Acceptance levels describe the expected outcome of each test procedure.

ANSI/BIFMA - ANSI is the American National Standards Institute. Approval of an American National Standard requires verification by ANSI that the requirements for due process, consensus, and other criteria for approval have been met by the standards developer. BIFMA is the Business and Institutional Furniture Manufacturer's Association, an association of manufacturers of desk products and the like.

Apparatus - A machine or group of machines and accessories.

Arithmetic Mean - A number obtained by dividing the sum of a set of quantities by the number of quantities in a set; average.

ASTM - American Society for Testing and Materials.

Base Cabinets - A base cabinet is a storage devise consisting of two ends, a back, a face and may or may not include a top or top frame. The face may be open, to access the storage area, or may be outfitted with one or more drawers and/or doors. A base cabinet is always placed on the floor and normally supports a surface. The top sur-face is normally no more than 42" (1,067mm) off the floor surface.

Best Practices - When given a choice of grade, the "best practice" is to select one that offers a well defined degree of control over the quality of workmanship, materials, and installation of a project. SEFA-8 Standards are written from a view of high quality laboratory furniture.

Cabinet Depth (Deep) - Given a front, bottom, two sides, and a top, the cabinet depth is a measure of the side of the cabinet, in its normal upright position, from the outside back to the outside front excluding doors and door fronts.

Cabinet Height (High) - Given a front, bottom, two sides, and a top, the cabinet height is a measure of the side of the cabinet, in its normal upright position, from the bottom edge of the side to the top, excluding any surface.

Cabinet Width (Wide) - Given a front, bottom, two sides, and a top, the cabinet width is a measure of the front of the cabinet in its normal upright position from one side to the other.

Casework - Base and wall cabinets, display fixtures, and storage shelves. The generic term for both "boxes" and special desks, reception counters, nurses stations and the like. Generally includes the tops and work surfaces.

Caster - A small wheel on a swivel, set under a piece of furniture, a machine, etc., to facilitate moving it.

Chase (Plumbing Area) - Space located behind the back of the base cabinet used to house plumbing or electric lines.

Composition Core - A core material using particleboard, MDF, or agrifiber product.

Combination Unit - A base unit of the type that has both door(s) and drawer(s).

Counterbalance - A device or weight incorporated into the cabinet body to prevent overturning when movable elements are extended.

Counter Mounted Cabinet - A counter mounted cabinet is a wall cabinet (usually with a height of approximately 48" [1,219mm] and is typically mounted on the work surface or shelf, as in a reagent shelf).

Cupboard (Door Unit) - That portion of the cabinet with no drawer(s) that may be enclosed by doors.

Drawer - A sliding storage box or receptacle opened by pulling out and closed by pushing in.

Edge - Material of varying thickness commonly used to provide protection and seal the machine edge(s) of laminated panels. Typical edge materials are ABS, PVC,self-edge, or wood.

Free Standing - Requiring no support or fastening to other structures.

Hardware - Items such as screws, pulls, hinges, latches, locks, and drawer slides used in the construction of casework.

Interlocking Hardware - A device that limits drawer and/or pull-out shelf movement to only one at a time.

Joinery – The junction of two pieces intended to be permanently connected.

Laboratory Cart - A platform or multiple platforms with 4 wheels or casters designed and used to transport chemicals and/or instruments in laboratory and education settings. *(Currently not tested by SEFA).*

Laboratory Furniture - Furniture designed and manufactured for installation and use in a laboratory.

Latch - A piece of hardware designed to hold a door closed.

Leveling Screws (Levelers) - Threaded components designed to allow adjustment of the cabinet vertically as needed for leveling.

Medium Density Fiberboard (MDF) - Wood particles reduced to fibers in a moderate pressure steam vessel combined with a resin, and bonded together under heat and pressure.

Mobile Base Cabinet - A free standing storage cabinet mounted on casters specifically designed to be housed below an adjustable height bench/table and for movement within the room or space for optimal reconfiguration and flexibility and not to be used for transporting chemicals or instruments.

Mobile Tall Cabinet - A free standing storage cabinet mounted on casters and capable of being readily moved or relocated. Mobile storage tall cabinets are designed for movement within a room or space for reconfiguration and flexibility and not to be used for transporting chemicals or instruments. (Currently not tested by SEFA)

Movable Element - An element that can be moved to protrude past the cabinet body, including but not limited to doors, drawers and pull-out shelves.

Nominal Dimensions - Not all cabinet manufacturers produce product to the identical dimensions. All dimensions given in this document are accurate to within five percent, which is considered nominal.

Particleboard - A panel or core product composed of small particles of wood and wood fiber that are bonded together with synthetic resin adhesives in the presence of heat and pressure.

Permanent Damage - Destruction to material or joinery that would require repair in order to return to its original state.

Permanent Deformation - Deflection that has exceeded the limits of the product, thus changing the original shape of the product

Permanent Deterioration - Erosion or corrosion of material such that the component will never return to its original shape.

Permanent Failure - See "permanent damage."

Plywood - The term plywood is defined as a panel manufactured of three or more layers (plies) of wood or wood products (veneers or overlays and/or core materials), generally laminated into a single sheet (panel). Plywood is separated into two groups according to materials and manufacturing, hardwood plywood and softwood plywood. Except for special constructions, the grain of alternate plies is at right angles.

Pulls - Articles of hardware used to grasp and open/close the door or drawer (see also hardware).

Rack Resistance - The ability of a product to resist stresses that tend to make the product distort and the drawers to become misaligned.

Rail - A horizontal member extending from one side of the cabinet to the other.

Reagent - A substance used because of its chemical or biological activity.

Removable Back - A panel located on the inside back of the base cabinet, which is removable in order to gain access to utilities.

Stainless Steel - Iron based alloys containing more chromium than the 12% necessary to produce passivity (less reactive), but less than 30%.

Submersion - Covered with water.

Tables - An article of furniture having a flat, horizontal surface supported by one or more support members (legs), and a frame (apron).

Tall Cabinet (Full Height Unit) - A tall cabinet is a storage device that consists of two ends, a top and bottom panel, a back and a face. The face

may be open to access the storage area or may be outfitted with one or more drawers and/or door(s). A tall cabinet is always placed on the floor and is nominally 84" (2,134mm) high.

Torsion – A force acting at a distance which tends to twist or rotate an object or cabinet.

Uniformly Distributed – A force applied evenly over the area of a surface.

Unobstructed Entry - A cabinet is deemed to be unobstructed if access to the entire storage area is completely without obstacle.

Upright Position - A cabinet oriented in its intended position.

Veneer Core Plywood – A panel or core product composed of an odd number of thin veneer layers that are bonded together with an adhesive. Except for special constructions, the grain of alternate plies is at right angles. All plies shall be combinations of species, thickness, density, and moisture content to produce a balanced panel. All inner plies, except the innermost ply, shall occur in pairs.

Wall Cabinet - A wall cabinet is a storage device consisting of two ends, a back, a top, bottom, and a face. The face may be open to access the storage area or may be outfitted with one or more door(s). The wall cabinet usually does not include a drawer. A wall cabinet is always mounted on a vertical surface such as a wall, a divider, panel or some other vertical structure. A wall cabinet is usually less than 48" (1,219mm) high.

Work Surface - A normally horizontal surface used to support apparatus at a convenient height above the floor. Work surfaces are normally positioned atop a base cabinet or table structure.

3.1 Description of Testing Apparatus

Solid Steel Bar - A square solid steel bar 2 1/2" (63mm) square, 28 1/4" (717mm) long, weighing 50 pounds (22.679 Kg).

Sand or Shot Bag (10 pounds [4.535 Kg]) - A bag of plastic or cloth with the approximate dimensions 10 9/16" (268mm) x 11" (279mm) as in typical "gallon size re-closable stor-age bags." Filled with enough sand or shot so that contents weigh 10 pounds (4.535 Kg).

Sand Bag (20 pounds [9.071 Kg]) - Two 10 pound (4.535 Kg) sand bags bound together.

Shot Bag (100 lbs. [45.359 Kg]) - A plastic or cloth bag of sufficient size to contain 100 pounds (45.359 Kg) of shot.

Cycling Mechanism - Per ANSI BHMA 156.9.-2003

Steel Rod - A 2" (51mm) diameter by 12" (305mm) long rod, approximately 10 pounds (4.535 Kg) in weight.

Hardwood Corner Block - A block of hardwood 2" (51mm) square by 1" (25.4mm) high.

Edge Delamination test stand – The sample per section 8.7, Figure 8, is to be clamped into a base stand by the core material that the edgeband is glued to. The Instron force gauge (or equivalent type of force gauge) is mounted in a manner above the sample to pull vertically upward on the edgeband per Figure 9.

Edge Impact test stand – Please refer to Section 8.8, Figures 10 and 11, for dimensional information on the critical sizes that are to be used. The test stand is to be mounted to a stable vertical surface (large test stand frame or building wall) that will not allow impact absorption. The 22.75" hinged arm is 1" square, 14 ga tubing with a .75" x 2" x 10" solid steel bar attached to the end portion. The arm is hinged to the top extension of the base plate. The 9.5" square test sample is bolted to the test base plate as shown in figure #10 using a piece of metal angle above and below the sample. Bolts are run through both top and bottom angles and the test sample and securely tightened.

Threshold – A ½" High x 4" Wide x 36" Long rectangular block with a ½" High x 1" Deep Bevel along each length. Material selected shall be substantial and not move or deform during the test, such as hardwood or poly.

© SEFA 8PL-2026 Lab Grade Plastic Laminate Casework

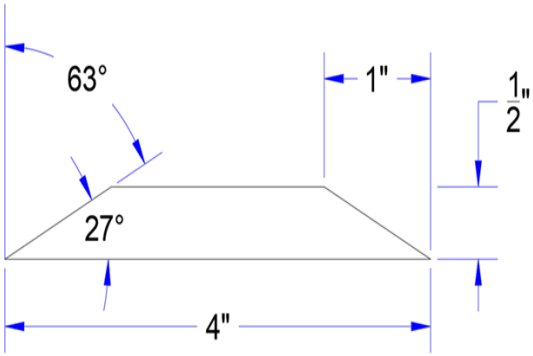

4.0 Base Cabinets

4.1 Description of Test Cabinet

The base cabinet shall be a combination of cupboard and drawer per Figure 1. The base cabinet shall be 48" +/- 1" (1219.2mm +/- 25.4mm) wide, 36" +/-1" (914.4mm +/- 25.4)mm high, and 22" +/-1" (558 mm+/- 25.4mm) deep. Cabinet dimensions do not include drawer or door front thickness. The drawer shall be above the cupboard, full width and approximately one-fourth the height of the cabinet's face opening. Drawer shall be a minimum of 18" (457.2mm) deep outside dimension. When slides are used for drawers, slides shall be a minimum of 18" (457.2mm) deep. Cupboard shall be double-door design and provide unobstructed entry into the cabinet interior with the doors open. The unit shall contain one adjustable shelf. The cabinet back shall be the removable type (per manufactures standard design as used for access to the plumbing or chase area) with the removable panel removed. Removable panel to be a minimum 36"x18" (914.4mm x 457.2mm). The cabinet shall have full height end panels with integral toeboard. The cabinet shall be free standing, squared and sitting 1" (25.4mm) off the floor atop four hardwood corner blocks 2" (50.8mm) square and 1" (25.4mm) high. A top of 1" (25.4mm) thick 37-50 pcf medium density fiberboard shall be positioned on the cabinet without glue or fasteners of any kind. The top dimensions will be such that it will overhang the cabinet perimeter by 1" (25.4).

Before conducting the test, a visual examination shall be conducted to verify that the unit configuration and setup conditions are appropriate. Operate doors and drawer. Doors should be free moving and latch properly. Inspect the unit for dimensions and note the fit of doors and drawers to the cabinet body. Open and close the drawer. The drawer should be free moving and function as specified by the manufacturer. Discontinue evaluation if unit is not in compliance or if malfunction is noted.

Fig. 1 - Description of Base Cabinet

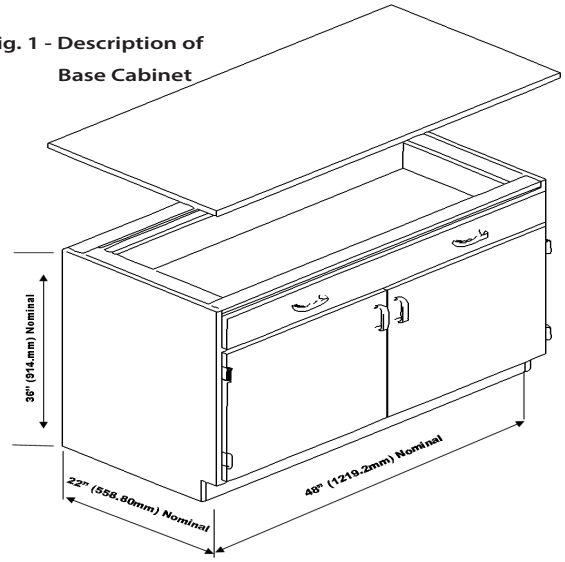

Although aggregate test results may vary from manufacturer to manufacturer, procedures for testing performance criteria shall be as outlined in this document and results made available upon request. It is assumed that the test model reflects the performance criteria for all products regardless of construction, size, or style used. A test unit has been identified in this document with the sole purpose of obtaining continuity of procedures and results in a scientific format.

4.2 Cabinet Load Test

4.2.1 Purpose of Test

The cabinet load test will challenge the structural integrity and load bearing capability of the cabinet construction. Regardless of countertop selection or attachment of cabinet to wall or floor, this test will demonstrate the ability of the cabinet to support heavy applied loads. This is not intended to test the functional characteristics of the cabinet under heavy loads.

4.2.2 Test Procedure

Verify that the cabinet is level. Remove drawer and open doors for testing purpose. Load the cabinet top by using 2000 pounds (907.184 Kg) of solid steel bars (per Section 3.1) stacked four high and spaced per Figure 2. After 24 hours, unload the cabinet.

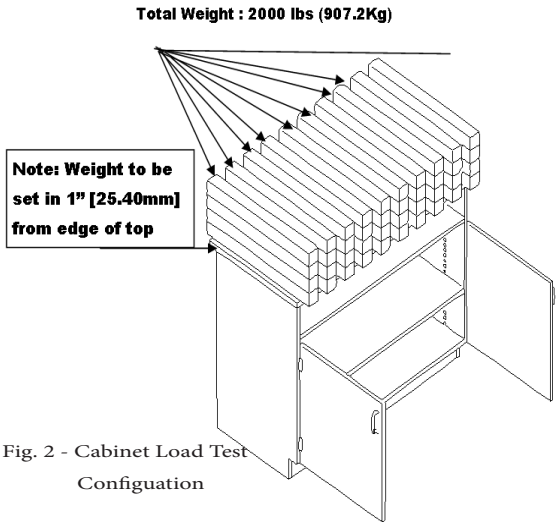

Fig. 2 - Cabinet Load Test Configuation

4.2.3 Acceptance Level

The cabinet will have no permanent failure.

4.3 Cabinet Concentrated Load Test

4.3.1 Purpose of Test

The purpose of this test is to challenge the functional characteristics of the cabinet when subjected to a concentrated load on the center of the cabinet top.

4.3.2 Test Procedure

Using solid weights or 10 pound (4.535 Kg) sand bags (per Section 3.1), apply a total of 200 pounds (90.718 Kg) to the top of the cabinet along the cabinet centerline (see Figure 3). Operate doors and drawers.

4.3.3 Acceptance Level

Under condition of test load, doors and drawer shall operate normally. There shall be no permanent distortion to front rail, cabinet joinery, doors, or drawers.

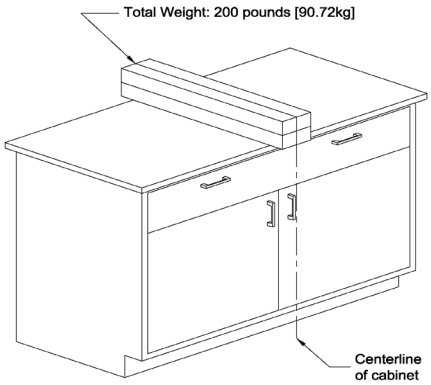

Figure 3. Base Cabinet Concentrated Load Test

4.4 Cabinet Torsion Test

4.4.1 Purpose of Test

This test will evaluate the structural integrity of the cabinet construction when subjected to a torsional load.

4.4.2 Test Procedure

The cabinet shall be tested in its normal upright position, raised not less than four-inches off the floor and supported on rear and one front corner. The area of support under the cabinet shall be located not more than 6" (152.4mm) in from each supported corner. Secure the cabinet diagonally from the unsupported corner with seven solid steel bars per Section 3.1 (350 pounds

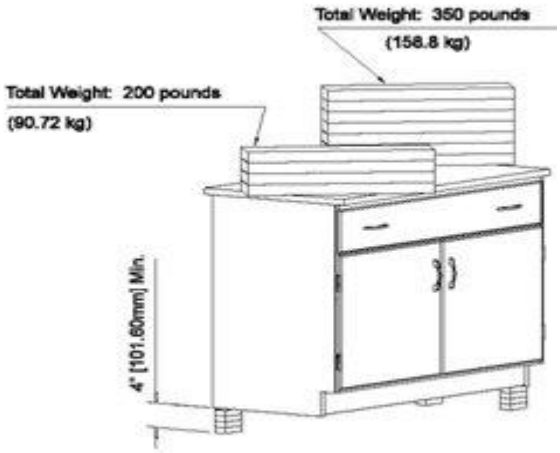

Figure 4. Base Cabinet Torsion Test Procedure.

© SEFA 8PL-2026 Lab Grade Plastic Laminate Casework

(158.757 Kg) of weight), on the top of the cabinet to prevent overturning. Apply four solid steel bars (200 pounds [90.718 Kg] of weight) to the unsupported corner for a period of 24 hours (see Figure 4). Remove weight and place cabinet on the floor in its normal upright position. Observe cabinet joinery. Level the cabinet and measure the face and back of the cabinet across the diagonal corners.

4.4.3 Acceptance Level

When returned to normal position, the operation of the cabinet shall be normal, and there will be no permanent damage. The difference between the two measurements taken from measuring the diagonal corners shall be no more than 1/8" (3.175mm).

4.5 Cabinet Submersion Test

There are numerous options for removable bases or ladder type bases with plastic laminate casework, including exterior grade plywood, MR board, composites, etc. Standard 1-M-2 and 1-M-3 particleboard is not recommended for sub-base material if there is a possibility of standing water as an issue.

4.5.1 Purpose of Test

This test will demonstrate the ability of a cabinet to resist wicking of moisture from the floor. Only units that rest on the floor or a unit where the base is within 2" (50.8 mm) of the floor should be subjected to this test.

4.5.2 Test Procedure

The material thickness along the perimeter of the cabinet shall be measured at 6" (152.4mm) increments. Record the thickness of the material to be submerged in water. Calculate the arithmetic mean of the data taken. Place the entire test cabinet in its upright position such that the cabinet is submerged 2" above the bottom of the removable base. Cabinet doors are removed for this test. After 24 hours, remove the unit from the water. After 48 hours of drying time, measure the thickness of the material at the same points measured initially. Calculate the new arithmetic mean. After the unit has been allowed to dry, inspect for other damage.

4.5.3 Acceptance Level

The cabinet will show no permanent deformation or deterioration. Increase in thickness shall not exceed ten percent of the initial mean measurements.

4.6 Spill Containment Test

Not applicable to Plastic Laminate Casework.

5.0 Doors

5.1 Door Hinge Test

5.1.1 Purpose of Test

This test will demonstrate the durability of the door, door attachment and its hardware (hinge leaf, screws, etc.) to an applied load of 160 pounds (72.575 Kg).

5.1.2 Test Procedure

Remove the shelf for this test. With unit and top set as described in Section 4.1, add sufficient weight to the top in order to prevent overturning. With cabinet door opened 90-degrees, hang a sling made up of two 80 pound (36.287 Kg) weights (shot bags or solid weights) over top of the door at a point 12" (304.8mm) out from the hinge centerline (see Figure 5). Slowly move door through two full cycles of the hinge at 160-degree arc. Remove weight and swing door through its full intended range of motion and close door.

5.1.3 Acceptance Level

The open door shall withstand a load of 160 pounds (72.575 Kg) when applied at a point 12" (304.8mm) from the hinge centerline without permanent damage. Operation of the door, after test shall show no significant permanent damage that will cause binding of the door or hinges or that will adversely affect operation of the catch.

5.2 Door Impact Test

Not applicable to Plastic Laminate Casework.

5.3 Door Cycle Test

5.3.1 Purpose of Test

This test will demonstrate the durability of the door hinge hardware to withstand 100,000 cycles as a reliable measure for longevity).

5.3.2 Test Procedure

This test shall be in conformance to the ANSI test procedure A156.9, Grade 1, requirements for cycle testing of doors. A cycling mechanism shall swing door 90-degrees. Door shall operate for 100,000 cycles with a speed not greater than 15 cycles per minute.

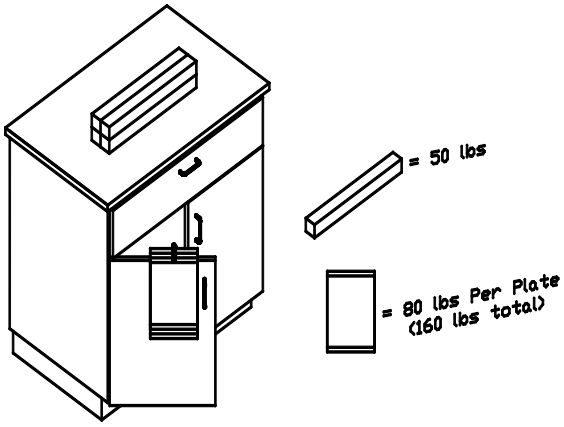

Fig 5 Base Cabinet Door Load Configuration
Note: Load top sufficient to prevent tipping of base cabinet

5.3.3 Acceptance Level

Door shall operate for the full cycle period without deterioration that will significantly affect the function of the door. The door shall operate freely without binding.

6.0 Drawers

6.1 Drawer Static Test

6.1.1 Purpose of Test

This test will demonstrate the ability to support a point load given to the front of the drawer and will challenge the drawer suspension system and the attachment of the drawer head to the drawer.

6.1.2 Test Procedure

With unit and top set as described in Section 4.1, add sufficient weight to the top in order to prevent overturning. Open the drawer to 13" (330.2mm) of travel and hang 150 pounds (68.03 Kg) from the drawer head at the centerline of the drawer for five minutes. Remove the weight and operate the drawer through the full cycle.

Fig. 6 Base Cabinet Drawer Static Load Test Configuration

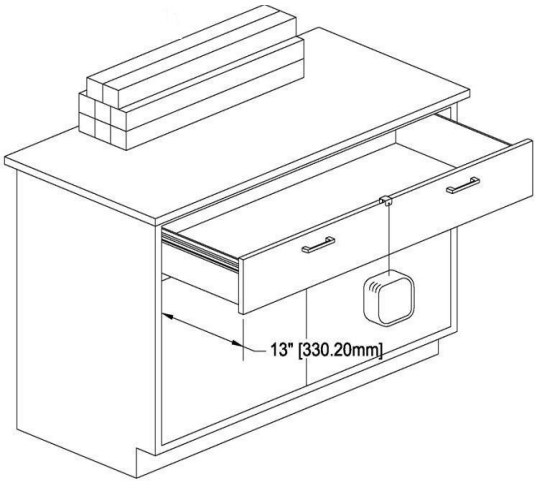

Note: Load top suffcient to prevent tipping of base cabinet. Weight shall be located at the back of the worksurface and centered.

6.1.3 Acceptance Level

There shall be no interference with the normal operation of the drawer and the drawer head should remain tightly fastened to the drawer.

6.2 Drawer and Door Pull Test

Not Applicable to Plastic Laminate Casework.

© SEFA 8PL-2026 Lab Grade Plastic Laminate Casework

6.3 Drawer Impact Test

6.3.1 Purpose of Test

This test will demonstrate the resistance to impact of the drawer bottom.

6.3.2 Test Procedure

Remove drawer; support each corner with 2"x2"x1" (50.8 x 50.8 x 25.4 mm) supports. Drop a 10 pound (4.545 Kg) sand or shot bag from a height of 24" (609.6 mm) into the bottom of the drawer at the center of the width of the drawer. Remove the sand or shot bag.

6.3.3 Acceptance Level

No damage or breakout of the drawer bottom.

6.4 Drawer Internal Rolling Impact Test

6.4.1 Purpose of Test

This test will evaluate the strength of the drawer head, bottom, and back as a result of opening and closing the drawer with a rolling load.

6.4.2 Test Procedure

Position the drawer on a table at a 45-degree angle per Figure 7. Place a 2" (50.8mm) diameter by 12" (304.8mm) long steel rod (approximately 10 pounds [4.545 Kg]) 13" (330.2mm) from the target impact area such that the rod will roll freely to impact the back of the drawer. Subject the back to three impacts and reverse the drawer to subject the front to three additional impacts.

6.4.3 Acceptance Level

The drawer shall show no permanent damage. All joinery shall be intact and the drawer, when replaced in the unit, shall operate normally. Minor scratches and dents are acceptable.

Fig. 7 Base Cabinet Drawer Internal Rolling` Impact Test Configuration

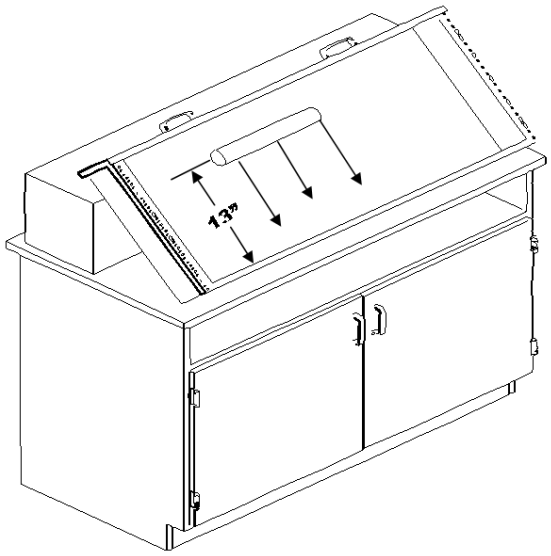

6.5 Drawer Cycle Test

6.5.1 Purpose of Test

This test is intended to test the drawer's operation under full load. To be considered Laboratory Grade Plastic Laminate Casework, the mechanical drawer slides must be rated at a minimum, ANSI/ BHMA A156.9 Grade 1.

6.5.2 Test Procedure

Mechanical Suspension Systems – A dynamic load of 100 pounds (45.359 Kg) shall be uniformly distributed in the drawer. Measure force required to activate the drawer. Operate over the full range of motion without engaging bumpers, stops or self-closing features for 50,000 cycles at a rate not to exceed 8 - 12 cycles per minute.

6.5.3 Acceptance Level

The drawer shall operate freely without evidence of binding. The force required to open and close loaded drawer shall not be greater than 8 pounds to activate.*

Fig 8 Drawer Cycling Mechanism Test Configuration

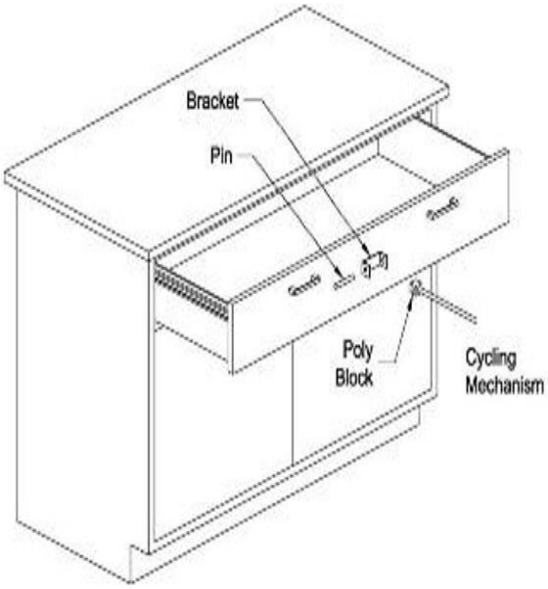

The American's with Disabilities Act (ADA) requires a force no greater than five pounds to activate hardware. The load rating in this document is intended only for testing conditions where loads challenge the durability of the hardware. Under actual conditions, drawer loading should be reduced to levels that result in compliance with ADA as applicable.

7.0 Shelving

7.1 Description of Test Cabinet

Plastic Lamnate shelving shall be tested using the following procedure. The shelves to be tested are as described in Sections 4.1 and 9.1 "Description of Test Cabinet".

7.2 Shelf Load Test

7.2.1 Purpose of Test

This test will demonstrate the ability of a shelf and its mounting hardware to support loads of 40 pounds (18.143 Kg) per square foot, not to exceed 200 pounds (90.718 Kg).

7.2.2 Test Procedure

A shelf shall be mounted in a manner in which it is designed. Measure the distance from the underside of the shelf to a reference point perpendicular to the center of the shelf. Use shot or sand bags weighing 10 pounds (4.535 Kg) each. Unless otherwise specified, load the shelf uniformly to 40 pounds (18.14 kg) per square foot of shelf area to a maximum of 200 pounds (90.71 Kg). Measure the deflection of the shelf by measuring the distance to the reference point and calculating the difference between the two measurements. Record data and remove the load from the shelf.

7.2.3 Acceptance Level

Different materials will perform differently to the loads based on the Modulus of Elasticity of the material and the cross section moment of inertia for the shape of the material. Longer shelves will support less loads than shorter shelves. The allowable maximum deflection of a shelf is 1/180 of the span and not in excess of .25" (6.35mm).

8.0 Cabinet Surface Finish Tests

8.1 Chemical Spot Test

Users should consider the chemical and staining agents that might be used near the laboratory casework. Common guidelines can be found by referring to: The casework manufacturer printed data for chemical and stain resistance, NEMA LD3-2000 for wood product chemical resistance, ASTM D3023 and ASTM C1378 for stain resistance or the most current versions. Because chemical and stain resistance is affected by concentration, time, temperature, humidity, housekeeping and other factors, it is recommended that users test samples in their actual environment with the substances they use.

8.1.1 Purpose of Test

The purpose of the chemical spot test is to evaluate the resistance a finish has to chemical spills.

	Chemical Reagent	Test Method	Lamitech Chemlam Black 1133	Formica A3CT Black 900	Formica Folkstone 935	Pionite Chemguard Black	Wilsonart Chemsurf	Wilsonart RVG 335	Wilsonart VG78 & 18
1	Acetate, Amyl	A	0	0	0	0	0	0	0
2	Acetate, Ethyl	A	0	0	0	0	0	0	0
3	Acetic Acid, 98%	B	0	0	0	0	0	0	0
4	Acetone	A	0	0	0	0	0	0	0
5	Acid Dichromate, 5%	B	0	0	1	0	0	2	1
6	Alcohol, Butyl	A	0	0	0	0	0	0	0
7	Alcohol, Ethyl	A	0	0	0	0	0	0	0
8	Alcohol, Methyl	A	1	1	0	0	0	0	0
9	Ammonium Hydroxide 28%	B	1	1	0	0	0	0	0
10	Benzene*	A	*	0	0	0	0	0	0
11	Carbon Tetrachloride	A	0	0	0	0	0	0	0
12	Chloroform	A	0	0	1	1	0	0	1
13	Chromic Acid, 60%	B	0	1	1	0	1	0	0
14	Cresol	A	0	1	1	0	0	0	0
15	Dichloroacetic Acid	A	0	1	1	0	0	0	0
16	Dimethylformamide	A	0	1	0	0	0	0	0
17	Dioxane	A	0	0	0	0	0	0	0
18	Ethyl Ether	A	0	0	0	1	0	0	0
19	Formaldehyde, 37%	A	0	0	0	0	0	0	0
20	Formic Acid, 90%	B	0	1	2	1	0	2	2
21	Furfural	A	0	2	1	1	0	2	0
22	Gasoline	A	0	0	1	0	0	0	0
23	Hydrochloric Acid, 37%	B	0	0	0	1	0	2	2
24	Hydrofluoric Acid, 48%	B	0	1	2	1	1	2	3
25	Hydrogen Peroxide, 30%	B	0	1	0	1	0	0	0
26	Iodine, Tincture of	B	2	1	2	0	0	0	0
27	Methyl Ethyl Ketone	A	0	0	0	0	0	0	0
28	Methylene Chloride	A	0	1	0	0	0	0	0
29	Mono Chlorobenzene*	A	*	1	0	0	0	0	0
30	Naphthalene	A	0	0	0	0	0	0	0
31	Nitric Acid, 20%	B	0	0	1	1	2	2	2
32	Nitric Acid, 30%	B	0	1	2	1	2	2	2
33	Nitric Acid, 70%	B	1	3	3	2	2	2	3
34	Phenol, 90%	A	0	1	1	0	0	1	0
35	Phosphoric Acid, 85%	B	0	0	0	0	0	2	2
36	Silver Nitrate Saturated	B	1	0	0	1	0	0	2
37	Sodium Hydroxide 10%	B	0	0	0	0	2	1	0
38	Sodium Hydroxide 20%	B	0	0	0	0	2	0	1
39	Sodium Hydroxide 40%	B	0	0	0	0	2	0	1
40	Sodium Hydroxide Flake	B	0	0	0	0	2	0	0
41	Sodium Sulfide Saturated	B	0	0	0	0	0	0	0
42	Sulfuric Acid, 33%	B	0	0	0	1	2	1	1
43	Sulfuric Acid, 77%	B	0	0	1	2	2	1	3
44	Sulfuric Acid, 98%	B	1	2	2	2	2	3	3
45	Sulfuric Acid 77% & Nitric Acid 70% equal parts	B	3	1	3	2	0	2	3
46	Toluene	A	0	0	0	0	0	0	1
47	Trichloroethylene	A	0	0	1	0	0	0	1
48	Xylene	A	0	0	0	0	0	0	0
49	Zinc Chloride, Saturated	B	0	0	0	0	0	0	0

***IF USE OF THIS CHEMICAL IS PERMITTED BY LAW IN THE COUNTRY WHERE THE TESTING IS BEING PERFORMED.**

Note: Many organic solvents are suspected carcinogens, toxic and/or flammable. Great care should be exercised to protect personnel and the environment from exposure to harmful levels of these materials.

8.1.2 Test Procedure

Obtain one sample panel measuring 14" x 24" (355.6mm x 609.6mm). The received sample to be tested for chemical resistance as described herein.

Place panel on a flat surface, clean with soap and water and blot dry. Condition the panel for 48-hours at 73º +/- 3ºF (23º +/- 2ºC) and 50 +/- 5% relative humidity or the currently accepted guideline set by ASTM. Test the panel for chemicalresistance using forty-nine different chemical reagents by one of the following methods.

Method A - Test volatile chemicals by placing a cotton ball saturated with reagent in the mouth of a 1-oz. (29.574cc) bottle and inverting the bottle on the surface of the panel.

Method B - Test non-volatile chemicals by placing five drops of the reagent on the surface of the panel and covering with a 24mm watch glass, convex side down.

For both of the above methods, leave the reagents on the panel for a period of one hour. Wash off the panel with water, clean with detergent and naptha, and rinse with deionized water. Dry with a towel and evaluate after 24-hours at 73º +/- 3ºF (23º +/- 2ºC) and 50 +/- 5% relative humidity, or the currently accepted guideline set by ASTM using the following rating system.

Level 0 - No detectable change.
Level 1 - Slight change in color or gloss.
Level 2 - Slight surface etching or severe staining.
Level 3 - Pitting, cratering, swelling, or erosion of coating. Obvious and significant deterioration.

Note: Percentages are by volume.

8.1.3 Acceptance Level

Results will vary from manufacturer to manufacturer due to differences in finish formulations. Laboratory grade finishes shall result in no more than four (4) Level 3 conditions. Individual test results, for the specified 49 reagents, will be verified with the established third party, independent SEFA 8 test submittal form. Suitability for a given application is dependent upon the chemicals used in a given laboratory.

8.2 Boiling Water Resistance Test

8.2.1 Purpose of Test

The purpose of this test is to measure the ability of high-pressure laminate to maintain its color and surface finish when subjected to boiling water.

8.2.2 Test Procedure

This test procedure is outlined in ANSI/NEMA LD 3-2005 Para 3.5 Boiling Water Resistance.

8.2.3 Acceptance Level

Acceptance level as defined in ANSI/NEMA LD 3-2005 Para 3.5 Boiling Water Resistance. No effect - no change in color or surface finish.

8.3 Ball Impact Resistance Test

8.3.1 Purpose of Test

The purpose of this test is to measure the ability of high-pressure laminate to resist fractures due to impact by a large diameter ball.

8.3.2 Test Procedure

This test procedure is outlined in ANSI/NEMA LD 3-2005 Para 3.8 Ball Impact Resistance.

8.3.3 Acceptance Level

Acceptance level as defined in ANSI/NEMA LD 3-2005 Para 3.8 Ball Impact Resistance.
The report shall indicate the actual height of impact resistance. Minimum of 50" (1250mm)

© SEFA 8PL-2026 Lab Grade Plastic Laminate Casework

8.4 Paint Adhesion Test

Not Applicable to Plastic Laminate Casework.

8.5 Paint Hardness Test

Not Applicable to Plastic Laminate Casework.

8.6 Dart Impact Test

8.6.1 Purpose of Test

The purpose of the test is to measure the ability of high-pressure laminate to resist fracture due to a small diameter ball.

8.6.2 Test Procedure

Per ANSI/NEMA LD 3-2005 Para 3.9.

8.6.3 Acceptance Level

Per ANSI/NEMA LD 3-2005 Para 3.9. The impact resistance value shall be reported in millimeters. Minimum of 500mm (20").

8.7 Edge Delaminating Test

8.7.1 Purpose of Test

The purpose of this test is to evaluate the adhesion strength between the edge and the core material.

8.7.2 Test Procedure

Mount test specimens in Instron force gauge jaws to pull the edge close to 90 degrees to the bond

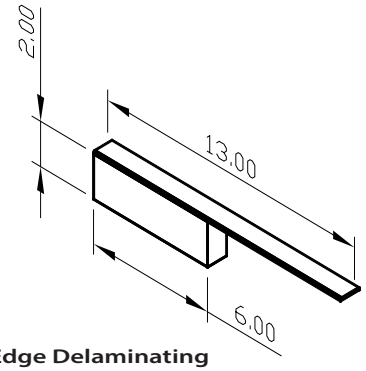

Figure 8 - Edge Delaminating Test Specimen

Figure 9
Edge Delaminating Test and Setup

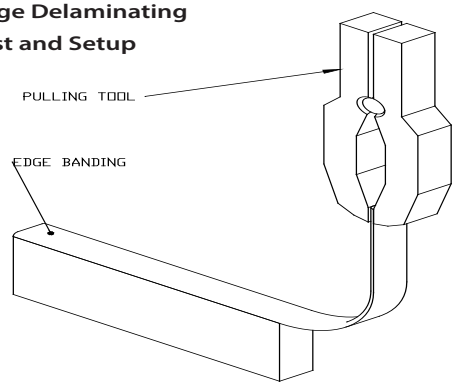

line of the banding, this angle may be varied based on the flexibility of the edge material. Measure the force required to separate the edge from the specimen. 2-inch x 6-inch panels with 13-inch edge banding, see Figures 8 and 9.

8.7.3 Acceptance Level

Peel value must be greater than 18.5 lbs/in.

8.8 Edge Impact Test

8.8.1 Purpose of Test

The purpose of this test is to demonstrate the resilience of the 3 mm PVC edge band material.

8.8.2 Test Procedure

Insert test specimen with 3mm edge band facing

Figure 10
Edge Impact Test

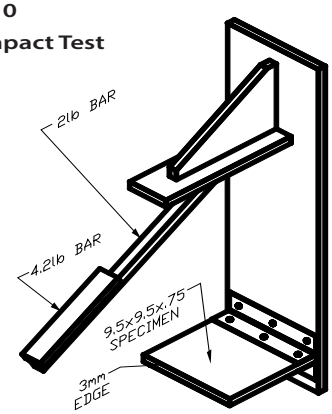

Figure 11
Edge Impact Test

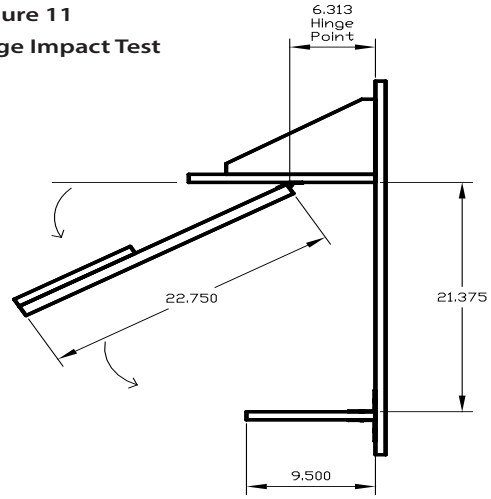

the front into fixture, raise arm to stop, release arm and let it impact the sample one time. See Figures 10 & 11.

8.8.3 Acceptance Level

There shall be no signs of damage to the 3 mm edge banding that was applied to the test specimen.

8.9 Wear Resistance (Abrasion) Test

8.9.1 Purpose of Test

This Test measures the ability of high-pressure laminate to resist abrasive wear-through of the decorative layer.

8.9.2 Test Procedure

Per ANSI/NEMA LD 3-2005 Para 3.13.

8.9.3 Acceptance Level

Per ANSI/NEMA LD 3-2005 Para 3.13.

9.0 Wall, Counter Mounted and Tall Units

9.1 Description of Test Cabinet

Evaluation shall be conducted on a wall mounted cabinet with nominal dimensions as follows: 48" (1,219.2mm) +/- 1" wide, 30" (762mm) +/- 1" high, and 12" (304.8mm) +/- 1" deep. The wall cabinet shall be manufactured to manufacturers' standard construction and practices. The wall cabinet shall have two (2) doors and two (2) shelves. Shelves shall be evaluated per Section 7.0 (Shelving). The unit and shelves shall be mounted in a manner recommended by the manufacturer. A visual examination shall be conducted to verify that the configuration and installation comply with these conditions. Discontinue evaluation if unit is not in compliance or if malfunction is noted.

Figure 12
Wall Cabinet

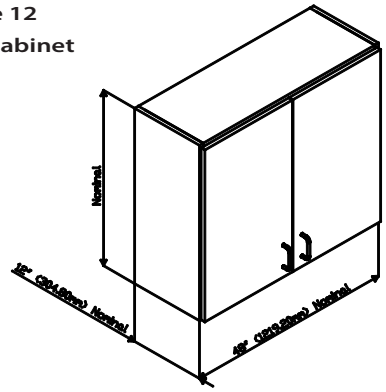

9.2 Wall Cabinet Load Test

9.2.1 Purpose of Test

The wall mounted load test will demonstrate the strength of the back of the wall cabinet as well as the joinery of the cabinet and function of doors when the unit is subjected to loads normally expected for laboratory furniture.

9.2.2 Test Procedure

Using sand or shot bags weighing 10 pounds (4.55 Kg) each, load cabinet bottom, each shelf, and top uniformly with 40 pounds (18.18 Kg) per square foot to a maximum of 200 pounds (90.91 Kg) each. Maximum load to any cabinet shall not exceed 600 pounds (272.73 Kg) (a maximum of 200 pounds [90.91 Kg] loaded to each bottom, a minimum of one shelf loaded per Section 7.0, and the top) regardless of the number of shelves. Test to be performed with doors closed.

9.2.3 Acceptance Level

With weights in place, after a period of 24 hours, operate doors through full travel to verify normal operation of doors. Remove weights and operate doors to verify normal operation. Verify that there is no significant permanent deflection of cabinet

top, cabinet back, cabinet bottom, or shelves. After weights are removed, the cabinet shall show no permanent damage to the cabinet, cabinet bottom, or shelves.

10.0 Tables

10.1 Description of Test Unit

The table for evaluation shall be a standing height, four legged, freestanding table. The table shall be nominally 60" (1,524mm) long, 24" (609.6mm) deep, and 36" (914.4mm) high (see Figure 13). Leg and apron size and construction shall be to manufacturer's specification. A top of 1" (25.4mm) thick 37 - 50 pcf medium density fiberboard shall be mounted on the table in the manner recommended by the manufacturer. The top dimensions will be such that it will overhang the cabinet perimeter by 1". Its weight shall be included in the test as live load.
A very large range of styles and designs can represent tables. Products inclusive in this section of testing are: Free Standing Tables, Desks, Aprons mounted between two fixed areas such as a wall or Casework, Mobile Tables (Free Standing Tables on wheels or casters), Mobile Under Counter Units, Mobile Workstations, Adjustable Tables, Modular Tables, C-Frame Tables, L-Frame Tables, J-Frame Tables, and Tables for systems furniture. These table systems can all be classified as one of three types of tables; Fixed, Free Standing, and mobile. See Figure 13.

Fig 13 Description of Test Table

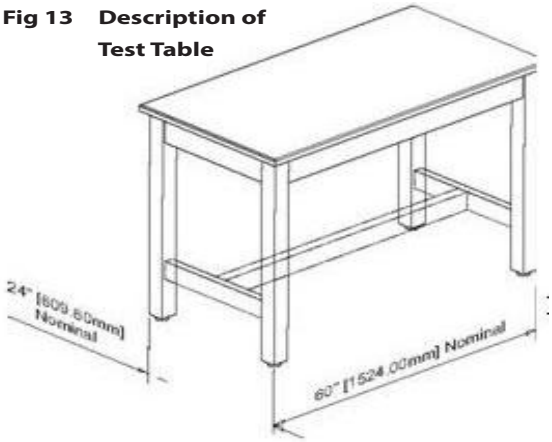

10.2 Table Static Load

10.2.1 Purpose of Test

This test will challenge the table components to loads that are normal for use in a laboratory.

10.2.2 Test Procedure

Load the table top by using solid steel bars (per Section 3.1), each weighing 50 pounds (22.679 Kg), stacked evenly and spaced per Figure 14. Load the table to the manufacturer's recommended live load*. These evenly distributed loads should be no less than 300 pounds (136.077 Kg) for mobile, 600 pounds

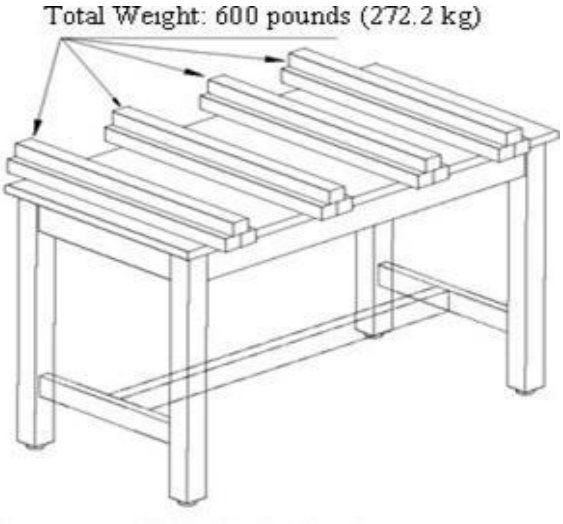

Fig 14 Table Static Load Test Configuration

(277,155 Kg) for free standing and 2000 pounds (907,184 Kg. for fixed. Include the weight of the work surface as llife load.

** Table load will vary considerably . Factors impacting live load capability include the size of the table, material, amount of drawers and book compartments, glide or caster load rating. Contact manufacturer for live load specifications.* See Fig 14.

10.2.3 Acceptance Level

No structural breakage shall result from application of the load. With the full load, the apron rails shall not deflect more than 1/360 of the span of the table and not to exceed 1/8" (3.175mm). In the case of a table with a drawer, the deflection of the rail shall not interfere with the function of the drawer. After the load is removed, inspect the table for structural damage

10.3 Table Racking

10.3.1 Purpose of Test

This test will demonstrate the structural integrity of the table construction when subjected to a racking load. Most racking failures occur upon dragging an unloaded table across a floor. The ability of a table to resist a racking load will indicate less damage to the structure. The following tests were based on and adapted from ANSI/BIFMA X5.5-1989 American National Standard for Office Furnishings "Desk Products-Tests." Adjustments have been made to better accommodate the specific applications of tables used in laboratories.

10.3.2 Test Procedure

The table shall have a common two-by-four wood rail clamped on the centerline of the top parallel to the ends of the table. The table shall then be positioned at 45º, with one pair of legs on the floor and the other raised and supported (see Figure 15). To prevent the table from tipping over, attach a cable to the end rail of the table and to the wall. The attachment of the cable at the wall must be equal to or less than the height of the attachment at the table. The table shall then have 250 pounds (113.398 Kg) of weight (five 50-pound (22.679 Kg) bars) placed on its top and held in place by the two-by-four wood rail. The unit shall remain in this position for seventy-two hours. The unit shall be lowered without shock to the leveled surface and the general operation of the drawers shall be evaluated.

10.3.3 Acceptance Level

When returned to normal position, the operation of the table shall be normal, and there will be no permanent damage.

Fig 15 Table Racking Test Configuration

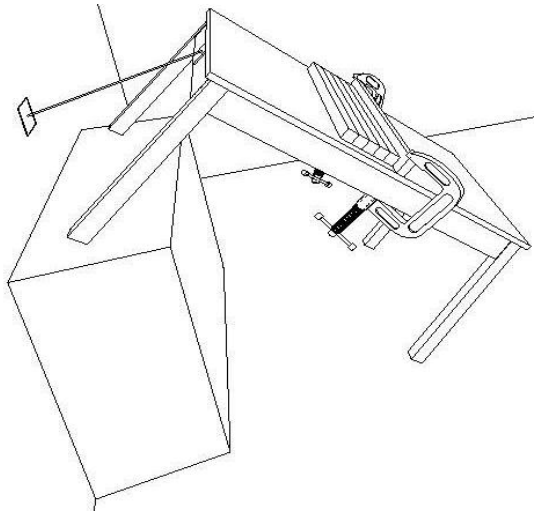

11.0 Mobile Casework

11.1 Description of Test Cabinet

Test cabinet to have 3 equal drawers on the face and finished both sides and back. The top to have an integral finished worksurface or an applied MDF worksurface not to exceed 1" in thickness nor surpass 1" in overhang beyond the cabinet on all 4 sides. The test cabinet to measure 24" wide x 22" deep x 30" high (with casters). The inside depth of the drawers shall be no less than 18"(457.2mm). The drawer in the full open position shall expose no less than 2/3 of the drawer interior.

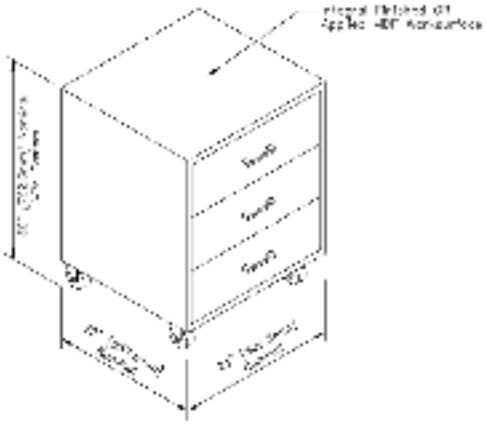

Figure 1. Description of Test Mobile Base Cabinet

11.2 Static Stability Test

11.2.1 Purpose of Test

The static stability test will challenge the load bearing capability of the mobile base cabinet construction. This test will demonstrate the ability of the mobile base cabinet to support heavy applied loads without overturning.

11.2.2 Test Procedure

Verify that the cabinet is level and supported only by the casters.

Casters shall be positioned with all casters turned rearward.

Extend the top drawer to fully open.

Manufacturers who choose to test their cabinet without Interlocking Hardware must test and pass the Static Stability Test with all movable elements positioned in their least stable condition.
Load the mobile base cabinet top drawer by using 50 pounds (22.68 Kg) of solid steel bars or shot bags evenly distributed within the fully extended top drawer. After five minutes, unload the cabinet.

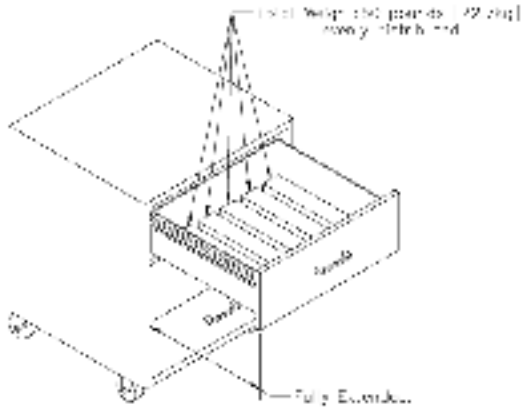

Figure 2. Static Stability Test Configuration

11.2.3 Acceptance Level

The cabinet shall not tip or overturn at any point. Operation of movable elements shall be normal under condition of test load. There shall be no signs of permanent deformation to front rail, cabinet joinery, doors, or drawers.

11.3 Static Load Test

11.3.1 Purpose of Test

The cabinet load test will challenge the structural integrity and load bearing capability of the mobile base cabinet construction. This test will demonstrate the ability of the cabinet to support and operate under heavy applied loads.

11.3.2 Test Procedure

All moveable elements shall be in their closed position for this test.

Verify that the cabinet is level and supported only by the casters.

Load the cabinet top by using 250 pounds (113.4 Kg) of solid steel bars or shot bags evenly distributed.

Each drawer shall be loaded with 50 pounds (22.68 Kg) of solid steel bars or shot bags evenly distributed within each closed drawer.

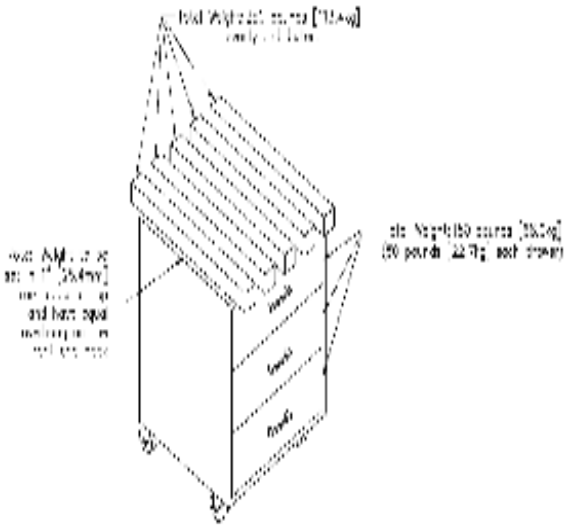

Figure 3. Static Load Test Configuration

11.3.3 Acceptance Level

Operation of movable elements shall be normal under condition of test load. There shall be no signs of permanent deformation to front rail, cabinet joinery, or movable elements.

11.4 Rolling Stability Test

11.4.1 Purpose of Test

This test will demonstrate the durability of the caster, caster attachment and the cabinet's ability to withstand travel over a threshold.

11.4.2 Test Procedure

Prior to conducting the test, a static load of 50 pounds (22.68kg) (using 5 ten 10-pound (4.54kg) sandbags per Section No. 3.1) shall be evenly distributed in each drawer. Secure a threshold (per Section No. 3.1) to the floor or blocked off from a wall far enough for the cabinet to completely travel over. Starting at the threshold, place a line of masking tape on the floor, every 0.8 meters, perpendicular to the threshold, a minimum of 8m of total length, if possible. The tape can also be placed every 0.4 meters with a pace of 120 beats per minute to achieve 0.8m/second. Using a metronome or smartphone app to make one click/beat every second (or alternatively 120 beats per minute) ensures the cabinet is traveling at 0.8m/second. Push the cabinet at its top, so that it is traveling over the masking tape at the same point every beat. The side of the cabinet shall be parallel to the direction of travel and moveable elements shall face the person pushing the cabinet. Continue to push the cabinet over the threshold at this pace.

11.4.3 Acceptance Level

The cabinet shall travel up and over the threshold without permanent damage or overturn.

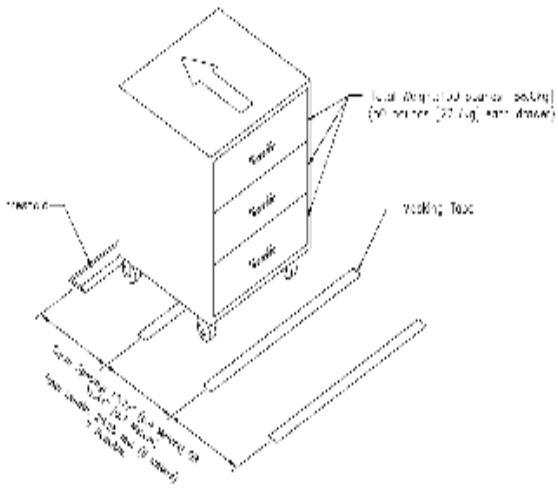

Figure 4. Rolling Stability Test Configuration

Endnotes:

1 Webster's Ninth New Collegiate Dictionary, 1988, p 980.

2ANSI/BHMA: http://buildershardware.com Standard A156.9-2007 (American National Standard for Cabinet Hardware)

3ANSI/NEMA: http://www.nema.org Standard LD-3 2005 (High-Pressure Decorative Laminate)

© SEFA 8PL-2026 Lab Grade Plastic Laminate Casework

SEFA 8 Comparison Chart - August 2025

	8-M	8-PH	8-PL	8-P	8-W
Base Cabinet Test Unit	48" W x 35" H x 22" D	48" W x 36" H x 22" D	48" W x 36" H x 22" D	48" W x 36" H x 22" D	48" W x 36" H x 22" D
4.2 Cabinet Load Test	2000 lbs for 10 minutes	2000 lbs for 24 hours	2000 lbs for 24 hours	1600 lbs for 10 minutes	2000 lbs for 24 hours
4.3 Cabinet Concentrated Load Test	200 lbs	200 lbs	200 lbs	160 lbs	200 lbs
4.4 Cabinet Torsion	200 lbs for 24 hours	200 lbs for 24 hours	200 lbs for 24 hours	160 lbs for 15 minutes	200 lbs for 24 hours
4.5 Cabinet Submersion	N/A	24" water for 4 hours	2" water for 24 hours/48 hour dry	24" water for 4 hours	2" water for 4 hours
4.6 Spill Containment	N/A	N/A	N/A	Fill with water to 1/8" of top of bottom rail - No leakage	N/A
5.0 Door Hinge Test	200 lbs	200 lbs	160 lbs	120 lbs	200 lbs
5.2 Door Impact Test	20 lbs = 240 in/lb impact	N/A	N/A	10 lbs = 190 in/lb impact	N/A
5.3 Door Cycle Test	100,000 cycles	100,000 cycles	100,000 cycles	50,000 cycles	100,000 cycles
6.1 Drawer Static Test	150 lbs	150 lbs	150 lbs	120 lbs	150 lbs
6.2 Drawer and Door Pull Test	50 lbs for 15 seconds	N/A	N/A	40 lbs	N/A
6.3 Drawer Impact Test	10 lbs / 24" High	10 lbs / 24" High	10 lbs / 24" High	8 lbs / 24" High	10 lbs / 24" High
6.4 Drawer Internal Rolling Impact	10 lbs / 13" High	10 lbs / 13" High	10 lbs / 13" High	10 lbs / 13" High	10 lbs / 13" High
6.5 Drawer Cycle Test	100 lbs / 50,000 cycles	75 lbs / 50,000 cycles	100 lbs / 50,000 cycles	10 lbs / 25,000 cycles	75 lbs / 50,000 cycles
7.2 Shelf Load Test	40 lbs/SF / 200 lb max/ 0.25" Def	40 lbs/SF / 200 lb max/ 0.25" Def	40 lbs/SF / 200 lb max/ 0.25" Def	10 lbs/SF / 75 lb max/ 0.25" Def	40 lbs/SF / 200 lb max/ 0.25" Def
8.1 Chemical Spot Test	No more than four Level 3	No more than four Level 3	No more than four Level 3	No Level 3. Additional chemical resistance data available.	No more than four Level 3
8.2 Hot Water Test	190 to 205 degree for 5 min	190 to 205 degree for 5 min	ANSI/NEMA LD 3-2005 Para 3.5 Boiling Water Res - No change in color or surface finish.	190 to 205 degree for 5 min	190 to 205 degree for 5 min
8.3 Impact Test	1 lb ball / 12" High	N/A	ANSI/NEMA LD 3-2005 Para 3.8 Ball Impact Res. - Min of 50"	N/A	N/A
8.4 Paint Adhesion Test	4B Rating or better	N/A	N/A	N/A	N/A
8.5 Paint Hardness Test	4H Pencel w/o penetration	N/A	N/A	N/A	N/A
8.6 Dart Impact Test	N/A	N/A	ANSI/NEMA LD 3-2005 Para 3.9 Dart Impact Resistance - Min of 20"	N/A	N/A
8.7 Edge Delamination Test	N/A	N/A	Peel value greater than 18.5 lbs/in	N/A	N/A
8.8 Edge Impact Test	N/A	N/A	No signs of damage after impact	N/A	N/A
8.9 Wear Resistance Test	N/A	N/A	ANSI/NEMA LD 3-2005 Para 3.13 Wear Reistance	N/A	N/A
Wall Mounted Test Unit	48" W x 30" H x 12" D	48" W x 30" H x 12" D	48" W x 30" H x 12" D	48" W x 30" H x 12" D	48" W x 30" H x 12" D
9.2 Wall Cabinet Load Test	200 lb max/shelf / 600 lb max	200 lb max/shelf / 600 lb max	200 lb max/shelf / 600 lb max	40 lb max/shelf / 480 lb max	200 lb max/shelf / 600 lb max
Table Test Unit	60" W x 36" H x 24" D	N/A	60" W x 36" H x 24" D	60" W x 36" H x 24" D	60" W x 36" H x 24" D
10.2 Table Static Load	600 lbs / 1/8" Deflection	N/A	300 lbs mobile, 600 lbs free standing, 2000 lbs fixed / 1/8" Deflection	300 lbs / 1/8" Deflection	300 lbs mobile, 600 lbs free standing, 2000 lbs fixed / 1/8" Deflection
10.3 Table Racking	250 lbs	N/A	250 lbs	N/A	250 lbs
Mobile Test Unit	24" W x 22" D x 30" H w/casters	24" W x 22" D x 30" H w/casters	24" W x 22" D x 30" H w/casters	24" W x 22" D x 30" H w/casters	24" W x 22" D x 30" H w/casters
11.2 Static Stability Test	50 lbs 5 Mins /No deformation	50 lbs 5 Mins /No deformation	50 lbs 5 Mins /No deformation	50 lbs 5 Mins /No deformation	50 lbs 5 Mins /No deformation
11.3 Static Load	250 lbs/top; 50 lbs per drawer no deformation	250 lbs/top; 50 lbs per drawer no deformation	250 lbs/top; 50 lbs per drawer no deformation	250 lbs/top; 50 lbs per drawer no deformation	250 lbs/top; 50 lbs per drawer no deformation
11.4 Roling Stability	50 lbs per drawer - no perm damage or overturn	50 lbs per drawer - no perm damage or overturn	50 lbs per drawer - no perm damage or overturn	50 lbs per drawer - no perm damage or overturn	50 lbs per drawer - no perm damage or overturn

LABORATORY FURNITURE
CERTIFICATE OF PERFORMANCE

_____ certifies that its laboratory furniture identified as
(Company Name)

_____ , has been tested in conformance with the full requirements
(Test Unit)
of the **SEFA 8-PL-2026 Standard**. Testing was performed by a SEFA-approved Independent Third Party Test Lab with results noted below.

Full documentation of the test results is available upon request in a bound report that includes a detailed description of the test unit and procedures, witnesses results and appropriate drawings or photographs of the test unit and procedures.

TEST	TEST RESULTS PASS/FAIL	TEST	TEST RESULTS PASS / FAIL	TEST	TEST RESULTS PASS / FAIL
4.2		6.3		8.7	
4.3		6.4		8.8	
4.4		6.5		8.9	ANSI/NEMA LD-3-2005 ¶ 3.13
4.5		7.2		9.2	
5.1		8.1	*See Attached Form*	10.2	
5.1		8.2	ANSI/NEMA LD-3-2005 ¶ 3.5	10.3	
5.3		8.3	ANSI/NEMA LD-3-2005 ¶ 3.8		
6.1		8.6	ANSI/NEMA LD-3-2005 ¶ 3.5		

COMPANY INFORMATION	TEST SUPERVISOR INFORMATION
Name:	Name:
Address:	Title:
	Signature:
Telephone:	**COMPANY OFFICER INFORMATION**
Fax:	Name:
	Title:
Date:	Signature:

© SEFA 8PL-2026 Lab Grade Plastic Laminate Casework

CHEMICAL RESISTANCE TESTING – 8-PL-2026

Date of Test: _____ Sample Description: _____

Type of Material Coated: _____ Coating Type: _____

Rating Scale: Level 0 – No Detectable Change
Level 1 – Slight Change in Color or Gloss
Level 2 – Slight Surface Etching or Severe Staining
Level 3 – Pitting, Cratering, Swelling, Erosion of Coating. Obvious and Significant Deterioration.

Test No.	Chemical Reagent	Rating	Comments
1.	Acetate, Amyl		
2.	Acetate, Ethyl		
3.	Acetic Acid, 98%		
4.	Acetone		
5.	Acid Dichromate, 5%		
6.	Alcohol, Butyl		
7.	Alcohol, Ethyl		
8.	Alcohol, Methyl		
9.	Ammonium Hydroxide, 28%		
10.	Benzene*		
11.	Carbon Tetrachloride		
12.	Chloroform		
13.	Chromic Acid, 60%		
14.	Cresol		
15.	Dichloroacetic Acid		
16.	Dimethylformamide		
17.	Dioxane		
18.	Ethyl Ether		
19.	Formaldehyde, 37%		
20.	Formic Acid, 90%		
21.	Furfural		
22.	Gasoline		
23.	Hydrochloric Acid, 37%		
24.	Hydrofluoric Acid, 48%		
25.	Hydrogen Peroxide, 30%		
26.	Iodine, Tincture of		
27.	Methyl Ethyl Ketone		
28.	Methylene Chloride		
29.	Mono Chlorobenzene*		
30.	Naphthalene		
31.	Nitric Acid, 20%		
32.	Nitric Acid, 30%		
33.	Nitric Acid, 70%		
34.	Phenol, 90%		
35.	Phosphoric Acid, 85%		
36.	Silver Nitrate Saturated		
37.	Sodium Hydroxide 10%		
38.	Sodium Hydroxide 20%		
39.	Sodium Hydroxide 40%		
40.	Sodium Hydroxide Flake		
41.	Sodium Sulfide Saturated		
42.	Sulfuric Acid, 33%		
43.	Sulfuric Acid, 77%		
44.	Sulfuric Acid, 96%		
45.	Sulfuric Acid 77%& Nitric Acid 70% equal parts		
46.	Toluene		
47.	Trichloroethylene		
48.	Xylene		
49.	Zinc Chloride, Saturated		

TEST PERFORMED BY: _____ DATE: _____